TOM HAWKINS SCHOOL

TRACY, CALIFORNIA
JEFFERSON SCHOOL DISTRICT
DSA File No. 39-39
DSA Application No. 02-102225

DSA REVIEW
AUGUST 18, 2000

ARCHITECT

Harlan Krusemark - Architect
4415 Cowell Rd.
Suite 230
Concord, CA 94521

STRUCTURAL ENGINEER
MFT Structural Engineers
120 Howard Street
Suite 420
San Francisco, CA 94105

MECHANICAL/PLUMBING ENGINEER
H & M Mechanical Group
2220 Livingston Street
Suite 200
Oakland, CA 94606

ELECTRICAL ENGINEER
WHM Engineering Consultants
1605 School Street
Moraga, CA 94556

LANDSCAPE ARCHITECT
Keller Mitchell & Co.
111 Montgomery Street
Suite 303
San Francisco, CA 94105

DESIGN ARCHITECT
John Lum Architecture
3246 17th Street
San Francisco, CA 94110

CAD ARCHITECT
H & Y Architects, Inc.
1320 Arnold Drive
Suite 266
Martinez, CA 94553

CIVIL ENGINEERS
Milani & Associates
3480 Buskirk Avenue
Suite 225
Pleasant Hill, CA 94523

STATE OF CALIFORNIA
Department of General Services
JUN 2 0 2001
Division of the State Architect
Regulation Se

RECEIVED
APR - 4 2001
ACME CONSTRUCTION CO., INC.

COPYRIGHT © 2000 HARLAN KRUSEMARK - ARCHITECT (HKA) THESE DRAWINGS ARE PROPRIETARY DOCUMENTS OF HKA AND ARE NOT TO BE DISTRIBUTED, PUBLISHED OR REPRODUCED WITHOUT WRITTEN PERMISSION OF HKA.

HKA
Harlan Krusemark - Architect
4415 Cowell Road, Suite 230
Concord, CA 94521
Tel: 925.681.1905
Fax: 925.681.1906

LICENSED ARCHITECT
HARLAN KRUSEMARK
Construction
No. 12383
Exp. 9/30/01
STATE OF CALIFORNIA

Revisions	Date
△	
△	
△	
△	
△	
△	

HAWKINS SCHOOL
(INCREMENTS #1 & #2)

475 Darlene Lane
Tracy, CA 95377

Jefferson School District
7500 West Linne Road
Tracy, CA 95304

DSA FILE NO. 39-39
IDENTIFICATION STAMP
DIVISION OF THE STATE ARCHITECT
APPL 02 -102225
ARCH
MECHE
RC
ELS
SS
DATE AUG

Sheet Title:
TITLE PAGE/ COVER SHEET

Printing Date / Purpose:
8/18/00 - DSA APPROVAL

Scale: NONE
Project Number: 9903.00
Sheet Number:

A0.0

of Sheets

FILE: 9919/A0.0

SYMBOLS / MATERIALS

Symbol	Material
DRAWING TITLE / DRAWING NUMBER / DRAWING LABEL / SHEET LOCATION (2 / A2.1 FLOOR PLAN, SCALE 1/4" = 1'-0")	COMPACTED SOIL
GRID LINE REFERENCE (AA, A1)	CERAMIC/QUARRY TILE
SECTION NUMBER / BUILDING SECTION / SHEET WHERE DRAWN (3 / A2.1)	MORTAR/GROUT/SAND
DETAIL NUMBER / DETAIL KEY / SHEET WHERE DRAWN (DASHED WHEN DRAWN ON SAME SHEET) (2 / A8.3)	METAL - LARGE SCALE
DETAIL NUMBER / DETAIL CUT / SHEET WHERE DRAWN (DASHED WHEN DRAWN ON SAME SHEET) (10 / A8.4)	METAL - SMALL SCALE
ELEV. STRING NUMBER / INTERIOR ELEVATIONS / SHEET WHERE DRAWN / ELEV. NO. IN STRING UNFOLD CLOCKWISE. NO NUMBER OR HOLLOW ARROW INDICATES ELEV. NOT DRAWN. (1 / A5.1; A, B, C, D)	ROUGH WOOD - CONTINUOUS
ELEVATION NUMBER / EXTERIOR ELEVATIONS / SHEET WHERE DRAWN (3 / A3.2)	ROUGH WOOD BLOCKING/SHIM
DOOR SYMBOL	FINISHED WOOD
DOOR TYPE	FINISHED PLYWOOD
WINDOW TYPE	STRUCTURAL PLYWOOD
FRAME TYPE	PLASTER ON EXPANDED METAL LATH
ROOM NUMBER (A01)	GYPSUM BOARD
REVISION SYMBOL (CLOUD INDICATES INFORMATION REVISED)	PARTITION (WALL)
ELEVATION TARGET OR DATUM POINT (+8'-1" T.O.PL.)	DIAGONAL BRACED FRAME - S.S.D.
WORK POINT	BATT OR BLANKET INSUL. (THERMAL OR SOUND)
PROPERTY LINE	RIGID INSULATION
FLOOR ELEVATION (ABV. OR BEL. DATUM) (+0'-6")	ACOUSTICAL TILE/BD.
PARTITION TYPE (REF. SHT A9.1) (10R/11T)	GLASS - LARGE SCALE
FIN. CEILING ELEVATION (ON REFL. CLG. PLAN) (+9'-2")	GLASS - SMALL SCALE
PROPERTY LINE	CARPET
CENTER LINE	2 X 4 FLUORESCENT LIGHT
DIAMETER	2 X 2 FLUORESCENT LIGHT
	SUPPLY AIR REGISTER (S.A.)
	RETURN AIR GRILLE (R.A.)
	2 X 4 SUSP. CEILING GRID & ACT-1(ACT-2 @ KITCHEN SUITE)
	1 X 1 GLUE-UP TILE(ACT-3)

CONSULTANTS

ARCHITECT
Harlan Krusemark - Architect

STRUCTURAL ENGINEER
MFT Structural Engineers
120 Howard Street Suite 420
San Francisco, CA 94105
Tel: 415.227.0880
Fax: 415.227.4683

MECHANICAL/PLUMBING ENGINEER
H & M Mechanical Group
2220 Livingston Street Suite 200
Oakland, CA 94606
Tel: 510.261.5000
Fax: 510.261.5003

ELECTRICAL ENGINEER
WHM Engineering Consultants
1605 School Street
Moraga, CA 94556
Tel: 925.376.2902
Fax: 925.376.2904

LANDSCAPE ARCHITECT
Keller Mitchell & Co.
111 Montgomery Street Suite 303
San Francisco, CA 94105
Tel: 415.546.9987
Fax: 415.546.9950

DESIGN ARCHITECT
John Lum Architecture
3246 17th Street
San Francisco, CA 94110
Tel: 415.558.9550
Fax: 415.558.0554

CAD ARCHITECT
H & Y Architects, Inc.
1320 Arnold Drive Suite 266
Martinez, CA 94553
Tel: 925.372.9172
Fax: 925.372.8893

CIVIL ENGINEERS
Milani & Associates
3480 Buskirk Avenue
Suite 225
Pleasant Hill, CA 94523
Tel: 925.941.1490
Fax: 925.941.1496

DEFERRED APPROVAL ITEMS

ITEM	SPECIFICATION SECTION
KITCHEN GREASE HOOD & DUCT FIRE SUPPRESSION SYSTEM	11400
FIRE PROTECTION (AUTOMATIC FIRE SPRINKLER SYSTEM)	15500
INDOOR BASKETBALL GOALS	10050

GENERAL NOTES

1. GENERAL CONTRACTOR AND SUBCONTRACTORS SHALL EXAMINE SITE PRIOR TO BID, COMPARE TO CONTRACT DOCUMENTS, AND NOTIFY ARCHITECT OF EXISTING CONDITIONS THAT MAY BE IN CONFLICT WITH OR CONTRADICTORY TO THE CONTRACT DOCUMENTS.

2. ALL WORK OF ALL THE CONTRACTORS SHALL COMPLY WITH ALL REQUIRED SECTIONS OF TITLE 19 AND TITLE 24 OF THE CALIFORNIA CODE OF REGULATIONS, EDITIONS IN FORCE AT THE TIME CONTRACT DOCUMENTS ARE APPROVED BY THE DIVISION OF THE STATE ARCHITECT.

3. DO NOT SCALE DRAWINGS. CONTRACTOR SHALL VERIFY ALL DIMENSIONS. IF ANY DISCREPANCIES ARE FOUND, THE ARCHITECT SHALL BE NOTIFIED IMMEDIATELY. WRITTEN DIMENSIONS TAKE PRECEDENCE OVER ANY APPEARANCE OF SCALE IMPLIED BY DRAWINGS, WHETHER OR NOT NOTED, "NOT TO SCALE". THE DIMENSIONS SHOWN ON PLANS, SECTIONS AND DETAILS ARE TO FACE OF STRUCTURE (STUD OR PLYWOOD, WHICHEVER IS OUTERMOST), COLUMN GRID LINES, FACE OF FINISH OR FACE OF CONCRETE, UNLESS OTHERWISE NOTED.

4. THE STRUCTURAL, ELECTRICAL, MECHANICAL, PLUMBING, CIVIL AND LANDSCAPE DRAWINGS ARE SUPPLEMENTARY TO THE ARCHITECTURAL DRAWINGS. IT SHALL BE THE RESPONSIBILITY OF THE CONTRACTOR TO CAREFULLY STUDY, COMPARE AND CHECK THE ARCHITECTURAL DRAWINGS BEFORE THE INSTALLATION OF STRUCTURAL, ELECTRICAL, MECHANICAL, PLUMBING, CIVIL OR LANDSCAPE WORK. SHOULD THERE BE ANY DISCREPANCIES IN THE DRAWINGS THAT WOULD CAUSE AN AWKWARD INSTALLATION, THEY SHALL BE BROUGHT TO THE ARCHITECT'S ATTENTION FOR CLARIFICATION PRIOR TO INSTALLATION, AND WITH TIME ALLOWANCES ADEQUATE TO AVOID DELAYS. WORK INSTALLED IN CONFLICT WITH THE ARCHITECTURAL DRAWINGS SHALL BE CORRECTED BY THE GENERAL CONTRACTOR AT ITS COST.

5. INSTALLATION SHALL FOLLOW MANUFACTURER'S PUBLISHED SPECIFICATIONS, INSTALLATION INSTRUCTIONS AND/OR TRADE STANDARDS IN ADDITION TO MEETING OR EXCEEDING THE DESIGN STANDARDS. IN ANY CASE, THE HIGHEST QUALITY SPECIFIED STANDARD, MEETING OR EXCEEDING CODE AND CONTRACT DOCUMENTS SHALL BE PROVIDED.

6. FIRE ACCESS ROAD(S) SHALL BE KEPT CLEAR AT ALL TIMES - BEFORE, DURING AND AFTER CONSTRUCTION.

7. GENERAL CONTRACTOR SHALL PROVIDE TEMPORARY FACILITIES FOR UTILITIES SUCH AS ELECTRICAL, TELEPHONE, WATER, SANITARY, GAS, ETC.

8. GENERAL CONTRACTOR SHALL BE RESPONSIBLE FOR BUILDINGS AND SITE LAYOUT. GENERAL CONTRACTOR SHALL EMPLOY A CIVIL ENGINEER OR LAND SURVEYOR LICENSED IN CALIFORNIA TO ACCURATELY LAYOUT BUILDINGS AND SITEWORK.

9. FOOD HANDLING FACILITIES SHALL COMPLY WITH ALL LOCAL AND STATE HEALTH REQUIREMENTS AND THE CALIFORNIA UNIFORM RETAIL FOOD FACILITIES LAW.

10. THE INTENT OF THESE DRAWINGS AND SPECIFICATIONS IS THAT THE WORK OF THE CONSTRUCTION IS TO BE IN ACCORDANCE WITH TITLE 24, CALIFORNIA CODE OF REGULATIONS. SHOULD ANY CONDITIONS BE DISCOVERED THAT ARE NOT COVERED BY THE CONTRACT DOCUMENTS WHEREIN THE FINISHED WORK WILL NOT COMPLY WITH TITLE 24, C.C.R., A CHANGE ORDER OR A SEPARATE SET OF PLANS AND SPECIFICATIONS DETAILING AND SPECIFYING THE REQUIRED WORK SHALL BE SUBMITTED TO AND APPROVED BY D.S.A. BEFORE PROCEEDING WITH THE WORK.

11. GEOLOGICAL INVESTIGATION DATA AND REPORTS HAVE BEEN PREPARED BY TERRASEARCH, INC. AND ARE AVAILABLE FROM THE OWNER: "GEOTECHNICAL INVESTIGATION ON PROPOSED HAWKINS SCHOOL", DATED 1/03/00 (WITH SUBSEQUENT REVISIONS). RECOMMENDATIONS OF THE ABOVE REPORT SHALL ESTABLISH MINIMUM REQUIREMENTS FOR PERFORMANCE OF WORK UNDER THIS CONTRACT.

12. THE DRAWINGS INDICATE LOCATIONS, DIMENSIONS, AND TYPICAL DETAILS OF CONSTRUCTION. THE DRAWINGS DO NOT ILLUSTRATE EVERY CONDITION; WORK NOT EXPRESSLY DETAILED SHALL BE OF CONSTRUCTION SIMILAR TO PARTS THAT ARE DETAILED.

13. FINISHED FLOOR ELEVATIONS (DATUM 0'-0") FOR BUILDINGS REFER TO SITE ELEVATIONS AS FOLLOWS: BUILDINGS A,B,J & L - 122.00; BUILDINGS C,H & M - 121.25; BUILDINGS D & G - 121.30; BUILDINGS E & F - 118.90; BUILDING K - 121.91; BUILDING M PLATFORM - 122.92; S.C.D.

14. GENERAL CONTRACTOR SHALL CAREFULLY STUDY AND COMPARE ALL CONTRACT DOCUMENTS (AND ABOVE RELATED DOCUMENTS) WITH EACH OTHER AND SHALL IMMEDIATELY REPORT TO THE ARCHITECT ANY INCONSISTENCIES, ERRORS, OR OMISSIONS DISCOVERED. FOR PURPOSES OF PREPARING A BID, IN CASE OF CONFLICTING INSTRUCTIONS, THE CONTRACTOR SHALL ALLOW FOR THE ONE INVOLVING THE HIGHER COST OR LONGER CONSTRUCTION TIME. SHOULD THE CONTRACTOR PERFORM ANY CONSTRUCTION ACTIVITY KNOWING IT INVOLVES AN INCONSISTENCY, ERROR, OR OMISSION IN THE CONTRACT DOCUMENTS (OR REASONABLY SHOULD HAVE KNOWN), THE CONTRACTOR SHALL ASSUME RESPONSIBILITY FOR SUCH PERFORMANCE AND SHALL PROVIDE CORRECTIONS AT ITS COST.

VICINITY MAP

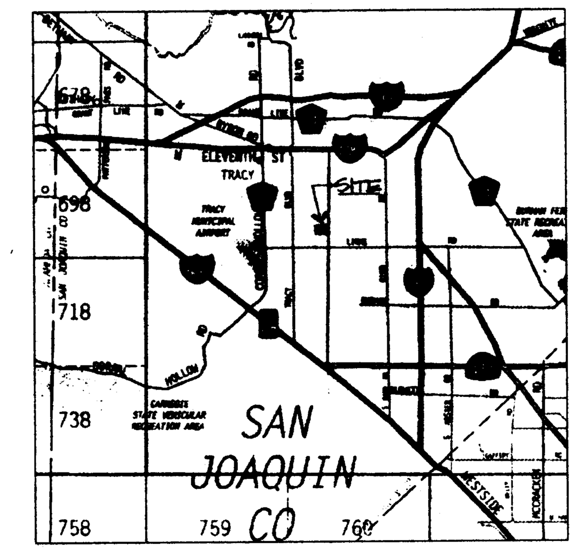

LOCATION MAP

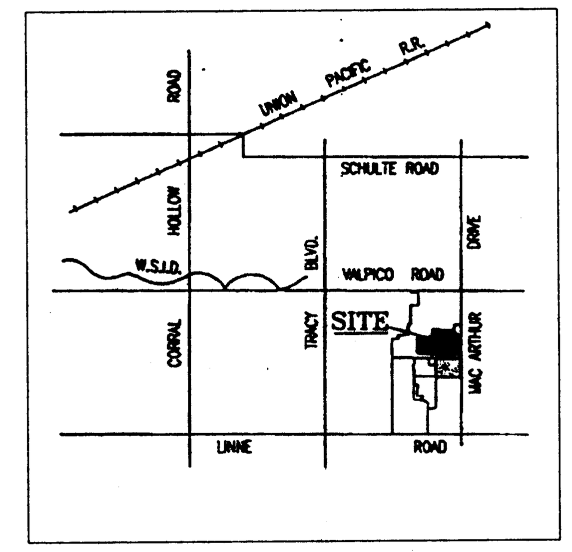

SHEET INDEX

Sheet	Title
A0.0	TITLE PAGE/COVER SHEET
A0.1	SHEET INDEX, GENERAL INFORMATION
A0.2	CODE ANALYSIS
C0.1	GENERAL NOTES, ABBREVIATIONS & LEGEND
C0.2	DETAILS
C0.3	EROSION CONTROL DETAILS & NOTES
C1.0	HORIZONTAL CONTROL PLAN
C1.1	HORIZONTAL CONTROL POINT SCHEDULE
C2.0	SITE GRADING & DRAINAGE PLAN
C2.1	WEST BLDGS AREA GRADING & DRAINAGE PLAN
C2.2	EAST BLDGS AREA GRADING & DRAINAGE PLAN
C2.3	PHASE II GRADING PLAN
C3.0	EROSION CONTROL PLAN
L1.0	LANDSCAPE LEGENDS, NOTES & ABBREVIATIONS
L1.1	LANDSCAPE DIMENSION PLAN - EAST
L1.2	LANDSCAPE DIMENSION PLAN - WEST
L1.3	LANDSCAPE PLANTING PLAN - EAST
L1.4	LANDSCAPE PLANTING PLAN - WEST
L1.5	LANDSCAPE IRRIGATION PLAN - EAST
L1.6	LANDSCAPE IRRIGATION PLAN - WEST
L7.1	LANDSCAPE CONSTRUCTION DETAILS
L7.2	LANDSCAPE CONSTRUCTION & PLANTING DETAILS
L7.3	LANDSCAPE IRRIGATION DETAILS
A1.1	SITE PLAN
A1.2	BUILDINGS AREA SITE PLAN
A1.3	SITE DETAILS
A1.4	EXTERIOR DETAILS
A2.1	BLDG. A: ADMINISTRATION FLOOR PLAN, R.C.P, ROOF PLAN, SCHEDULES
A2.2	BLDG. K: KINDERGARTEN FLOOR PLAN, R.C.P, ROOF PLAN, SCHEDULES
A2.3	BLDG. L: LIBRARY FLOOR PLAN, R.C.P, ROOF PLAN, SCHEDULES
A2.4	BLDG. M: MULTI-PURPOSE FLOOR PLAN, SCHEDULES
A2.5	BLDG. M: MULTI-PURPOSE R.C.P, ROOF PLAN
A2.6	BLDGS. B, C, & D: 3RD, 1ST, & 2ND GRADES FLOOR PLANS
A2.7	BLDGS. E & F: 7TH & 8TH GRADES FLOOR PLANS
A2.8	BLDGS. G, H, & J: 6TH, 5TH & 4TH GRADES FLOOR PLANS
A3.1	BLDGS. A & K: ELEVATIONS AND SECTIONS
A3.2	BLDG. L: ELEVATIONS AND SECTIONS
A3.3	BLDG. M: ELEVATIONS
A3.4	BLDG. M: SECTIONS
A3.5	BLDGS. B, C, & D: ELEVATIONS
A3.6	BLDGS. E & F: ELEVATIONS
A3.7	BLDGS. G, H, & J: ELEVATIONS
A3.8	WALL SECTIONS, DETAILS BLDG. A
A3.9	WALL SECTIONS, DETAILS BLDG. A
A3.10	WALL SECTIONS, DETAILS BLDG. K
A3.11	NOT USED
A3.12	WALL SECTIONS, DETAILS BLDG. L
A3.13	NOT USED
A3.14	WALL SECTION, DETAILS BLDG. M
A3.15	WALL SECTION, DETAILS BLDG. M
A4.1	ENLARGED KITCHEN PLAN, ELEVATIONS, DETAILS, EQUIPMENT SCHEDULE
A4.2	BLDGS. A, K & M: ENLARGED TOILET PLANS, ELEVATIONS, DETAILS, NOTES, LEGEND
A4.3	BLDGS. D & G: ENLARGED TOILET PLANS, ELEVATIONS, DETAILS, NOTES, LEGEND
A5.1	INTERIOR ELEVATIONS - BUILDING A
A5.2	INTERIOR ELEVATIONS - BUILDING A
A5.3	INTERIOR ELEVATIONS - BUILDING L & K
A5.4	INTERIOR ELEVATIONS BLDG. M
A5.5	INTERIOR ELEVATIONS: TYPICAL CLASSROOMS
A5.6	INTERIOR ELEVATIONS, BLDG. B & F
A8.1	NOT USED
A8.2	EXTERIOR DETAILS: MISCELLANEOUS
A8.3	NOT USED
A9.1	PARTITION AND ROOF ASSEMBLY TYPES AND NOTES
A9.2	NOT USED
A9.3	DOOR, FRAME AND WINDOW TYPES & DETAILS
A9.4	FRAMING DETAILS
A9.5	CASEWORK TYPES, DETAILS
A9.6	CEILING AND MISCELLANEOUS DETAILS
S0.1	GENERAL NOTES
S2.1	BLDG A: ADMINISTRATION PLANS, BRACED FRAME ELEVATIONS
S2.2	BLDG K: KINDERGARTEN PLANS, BRACED FRAME & TRUSS ELEVATIONS
S2.3	BLDG L: LIBRARY PLANS, BRACED FRAME & TRUSS ELEVATIONS
S2.4	BLDG M: MULTI-PURPOSE FOUNDATION, FLOOR & ROOF FRAMING PLANS
S2.5	BLDG M: MULTI-PURPOSE FRAMING
S3.1	BLDG M: MULTI-PURPOSE FRAMING ELEVATIONS
S3.2	BLDG M: MULTI-PURPOSE FRAMING ELEVATIONS
S5.1	TYPICAL CONCRETE DETAILS
S5.2	CONCRETE DETAILS & SECTIONS
S5.3	CONCRETE DETAILS & SECTIONS
S7.1	TYPICAL STEEL DETAILS
S7.2	TYPICAL METAL DECK DETAILS
S7.3	STEEL DETAILS & SECTIONS
S7.4	STEEL DETAILS & SECTIONS
S7.5	STEEL DETAILS & SECTIONS
S7.6	BLDG K: KINDERGARTEN TYPICAL STEEL DETAILS
S7.7	BLDG L: LIBRARY TYPICAL STEEL DETAILS
S7.8	BLDG A: ADMINISTRATION TYPICAL STEEL DETAILS
S7.9	STEEL DETAILS AND SECTIONS
P0.1	PLUMBING SCHEDULES AND LEGEND
P1.1	PLUMBING SITE PLAN
P2.1	BUILDING A: PLUMBING PLAN
P2.2	BUILDING K: PLUMBING PLAN
P2.3	BUILDING L: PLUMBING PLAN
P2.4	BUILDING M: PLUMBING PLAN
P2.6	BUILDINGS B, C AND D: PLUMBING PLANS
P2.7	BUILDINGS E AND F: PLUMBING PLANS
P2.8	BUILDINGS G, H AND J: PLUMBING PLANS
P3.1	PLUMBING DETAILS
P3.2	PLUMBING DETAILS
M0.1	LEGENDS, SCHEDULES AND DETAILS
M0.2	CONTROL DIAGRAMS
M2.1	BLDG. A: MECHANICAL PLAN AND SCHEDULES
M2.2	BLDG. K MECHANICAL PLAN AND SCHEDULES
M2.3	BLDG. L MECHANICAL PLAN AND SCHEDULES
M2.4	BLDG. M MECHANICAL PLAN AND SCHEDULES
M2.5	BLDG. B, D, & G MECH. PLANS (EXH. FANS ONLY) & SCHEDULE
E0.0	ELECTRICAL SYMBOL LIST, GENERAL NOTES AND FIXTURE SCHEDULE
E0.1	ELECTRICAL ONE LINE SERVICE DIAGRAM
E0.2	ELECTRICAL PANEL SCHEDULES
E0.3	ELECTRICAL PANEL SCHEDULES
E0.4	ELECTRICAL PANEL SCHEDULES
E0.5	ELECTRICAL DETAILS
E0.6	ELECTRICAL SPECIAL SYSTEMS RISER AND SCHEDULES
E1.0	ELECTRICAL SITE PLAN POWER DISTRIBUTION
E1.1	ELECTRICAL SITE PLAN SIGNAL AND DATA
E1.2	ELECTRICAL SITE PLAN FIRE ALARM
E2.1A	ELECTRICAL BUILDING A: ADMINISTRATION LIGHTING PLAN
E2.1B	ELECTRICAL BUILDING A: ADMINISTRATION POWER PLAN
E2.1C	ELECTRICAL BUILDING A: ADMINISTRATION SIGNAL PLAN
E2.2A	ELECTRICAL BUILDING K: KINDERGARTEN LIGHTING PLAN
E2.2B	ELECTRICAL BUILDING K: POWER PLAN
E2.2C	ELECTRICAL BUILDING K: SIGNAL PLAN
E2.3A	ELECTRICAL BUILDING L: LIBRARY LIGHTING PLAN
E2.3B	ELECTRICAL BUILDING L: POWER PLAN
E2.3C	ELECTRICAL BUILDING L: SIGNAL PLAN
E2.4A	ELECTRICAL BUILDING M: MULTI-PURPOSE LIGHTING PLAN
E2.4B	ELECTRICAL BUILDING M: POWER PLAN
E2.4C	ELECTRICAL BUILDING M: SIGNAL PLAN
E2.6C	ELECTRICAL BUILDINGS B, C AND D: SIGNAL PLAN
E2.7C	ELECTRICAL BUILDINGS E AND F: SIGNAL PLAN
E2.8C	ELECTRICAL BUILDINGS G, H AND J: SIGNAL PLAN
E3.1	FIRE ALARM DIAGRAM

ABBREVIATIONS

Abbreviation	Meaning
A.C.T.	ACOUSTICAL CEILING TILE
ACST.	ACOUSTIC(AL)
A.B.	ANCHOR BOLT OR AGGREGATE BASE
ACCESS.	ACCESSIBLE
A.C.	ASPHALTIC CONCRETE
A/C	AIR CONDITIONING OR ASPHALTIC CONCRETE
ACS	DSA ACCESS COMPLIANCE SECTION
ADJ.	ADJACENT
A.E.S.	ARCHITECTURALLY EXPOSED STEEL
A.E.S.D.	ARCHITECTURALLY EXPOSED STEEL DECK
A.E.S.S.	ARCHITECTURALLY EXPOSED STRUCTURAL STEEL
A.F.F.	ABOVE FINISHED FLOOR
ALT.	ALTERNATE
ALUM.	ALUMINUM
ARCH.	ARCHITECT(URAL)
A.T.	ACOUSTICAL TILE
BTWN.	BETWEEN
BD.	BOARD
BEL.	BELOW
BLDG.	BUILDING
BLK.	BLOCK
BLKG.	BLOCKING
BM.	BEAM
BOTT.	BOTTOM
BSMT.	BASEMENT
B.U.R.	BUILT UP ROOFING
C	DEGREES CELSIUS (CENTIGRADE)
C/L OR C.L.	CHAIN LINK
CAB.	CABINET
CBC	CALIFORNIA BUILDING CODE
C.C.R.	CALIFORNIA CODE OF REGULATIONS
CEM.	CEMENT
CFMF	COLD-FORMED METAL FRAMING
C.J.	CONTROL JOINT
CLG.	CEILING
CLR.	CLEAR
CNR.	CORNER
COL.	COLUMN
CONC.	CONCRETE
CONST.	CONSTRUCTION
CONT.	CONTINUOUS
CONTR.	CONTRACTOR
CPT.	CARPET
CORR.	CORRUGATED OR CORRIDOR
C.O.T.	CITY OF TRACY
C.T.	CERAMIC TILE
C.M.U.	CONCRETE MASONRY UNIT
C.Y.	CUBIC YARD
d	PENNY
D.	DEEP
DBL.	DOUBLE
DEPT.	DEPARTMENT
DET. OR DTL.	DETAIL
D.F.	DRINKING FOUNTAIN or DOUGLAS FIR
DIA.	DIAMETER
DIAG.	DIAGONAL
DIM.	DIMENSION
DISP.	DISPENSER
DN.	DOWN
DR.	DOOR
D.S.	DOWNSPOUT
DSA	DIVISION OF THE STATE ARCHITECT
D.W.	DISHWASHER
DWG.	DRAWING
DWGS.	DRAWINGS
E.	EAST
(E) or EXIST.	EXISTING
EA.	EACH
E.B.	EXPANSION BOLT
E.W.	EACH WAY
EXP.	EXPANSION OR EXPOSED
E.J.	EXPANSION JOINT (COVER ASSY.)
ELEC.	ELECTRIC(AL)
ELEV.	ELEVATION
ENCL.	ENCLOSURE
EQ.	EQUAL
EST.	ESTIMATE
EXT.	EXTERIOR
F	DEGREES FAHRENHEIT
F.A.	FIRE ALARM
F.D.	FLOOR DRAIN
F.E.	FIRE EXTINGUISHER
F.E.C.	FIRE EXTINGUISHER CABINET
F.F.	FACTORY FINISH or FINISHED FLOOR ELEVATION
F.H.	FIRE HYDRANT
FIN. FLR.	FINISH FLOOR ELEVATION
F.F.S.	FACTORY FINISH SMOOTH
F.H.C.	FIREHOSE CABINET
FIN.	FINISH
FLASH.	FLASHING
FIXT.	FIXTURE
FLS	DSA FIRE AND LIFE SAFETY SECTION
FLR.	FLOOR
FLUOR.	FLUORESCENT
F.O.	FACE OF
F.O.C.	FACE OF CONCRETE
F.O.F.	FACE OF FINISH
F.O.S.	FACE OF STUD
F.R.P.	FIBERGLASS REINF. PLASTIC
F.S.	FIRE SPRINKLER
FTG.	FOOTING
FT.	FOOT/FEET
F.T.	FIRE-TREATED
G.	GAS
GA.	GAUGE
GAL.	GALLON
G.C.	GENERAL CONTRACTOR
GALV.	GALVANIZED
G.I.	GALVANIZED IRON
G.L.	GRID LINE
GLU-LAM	GLUE-LAMINATED WD. MEMBER
GND.	GROUND
GYP.	GYPSUM
G.W.B.	GYPSUM WALL BOARD
GYP.BD.	GYPSUM BOARD
H.	HIGH
H.C.	HANDICAPPED
H.D.	HEAT DETECTOR
HD.	HEAD
HDBD.	HEADBOARD
HDR.	HEADER
HDWD.	HARDWOOD
H.M.	HOLLOW METAL(STD. STL.)
HDWE.	HARDWARE
HORIZ.	HORIZONTAL
HT.	HEIGHT
HTR.	HEATER
HR.	HOUR
H.R.	HANDRAIL
H.W.	HOT WATER
I.D.	INSIDE DIAMETER
I.E.	INVERT ELEVATION
INCR.	INCREMENT
INSUL.	INSULATION (ED)
INT. or INTER.	INTERIOR
INSP.	INSPECT (OR)
INV.	INVERT
JAN.	JANITOR
JSD	JEFFERSON SCHOOL DISTRICT (OWNER)
JT.	JOINT
K	DEGREES KELVIN
KIT.	KITCHEN
K.O.	KNOCK OUT
LAB.	LABORATORY
LAM.	LAMINATED
LAV.	LAVATORY
LB.	POUND
LBR.	LUMBER
L.	LONG
LINO.	LINOLEUM
LOCK.	LOCKER
MAN.	MANUAL
MAT.	MATERIAL
MAX.	MAXIMUM
MECH.	MECHANICAL
MED. CAB.	MEDICINE CABINET
MFR.	MANUFACTURER
MH.	MANHOLE
MIN.	MINIMUM or MINUTES
MIR.	MIRROR
MISC.	MISCELLANEOUS
M.O.	MASONRY OPENING
MTD.	MOUNTED
MTL.	METAL
N.	NORTH
(N)	NEW
N.I.C.	NOT IN CONTRACT
N.T.S.	NOT TO SCALE
NO.	NUMBER
N.S.	NON-SHRINK
O/	OVER
O.C.	ON-CENTER
O.F.D.	OVERFLOW DRAIN
O.D.	OUTSIDE DIAMETER
O.F.	OUTSIDE FACE
OFF.	OFFICE
OPG.	OPENING
OPP.	OPPOSITE
PH.	PHASE
PL.	PLATE
PLAS.	PLASTER
PLBG.	PLUMBING
P. LAM.	PLASTIC LAMINATE
PLYWD.	PLYWOOD
PNL.	PANEL
PR.	PAIR
PREFAB.	PREFABRICATED
PT.	PAINT
P.T.	PRESERVATIVE-TREATED OR PAPER TOWEL
P.V.C.	POLYVINYLCHLORIDE
Q.T.	QUARRY TILE
QTR. RD.	QUARTER ROUND
R.	RADIUS OR RISER
R.C.P.	REFLECTED CEILING PLAN
R.D.	ROOF DRAIN
RDWD.	REDWOOD
RECEPT.	RECEPTACLE
REF.	REFER TO
REFRIG.	REFRIGERATOR
REFL.	REFLECTED
REINF.	REINFORCE(MENT)
REQ'D.	REQUIRED
RESIL.	RESILIENT
RM.	ROOM
R.O.	ROUGH OPENING
R.S.	ROUGH SAWN
R.W.L.	RAINWATER LEADER
S.	SOUTH
S.F.	SQUARE FOOT
S/S	STAINLESS STEEL
S.S.	SANITARY SEWER
SSS	DSA STRUCTURAL SAFETY SECTION
S.C.D.	SEE CIVIL DRAWINGS
S.E.D.	SEE ELECTRICAL DRAWINGS
S.L.D.	SEE LANDSCAPE DRAWINGS
S.M.D.	SEE MECHANICAL DRAWINGS
S.O.G.	SLAB-ON-GRADE
S.P.D.	SEE PLUMBING DRAWINGS
S.S.D.	SEE STRUCTURAL DRAWINGS
SCH.	SCHEDULE
S.D.	STORM DRAIN OR SMOKE DETECTOR
SECT.	SECTION
SHT.	SHEET
SHTHG.	SHEATHING
SIM.	SIMILAR
STD.	STANDARD
STL.	STEEL
STN.	STAIN
STOR.	STORAGE
STRUCT.	STRUCTURAL
S.T.S.M.S.	SELF-TAPPING SHEET METAL SCREW
SUB.	SUBCONTRACTOR
SUBFL.	SUBFLOOR
S.V.	SHEET VINYL
SUSP.	SUSPENDED
T.	TREAD
TEL.	TELEPHONE
T & B	TOP & BOTTOM
T & G	TONGUE & GROOVE
TEMP.	TEMPERED OR TEMPERATURE
T.N.	TOENAIL
T.O.	TOP OF
T.O.B.	TOP-OF-BEAM
T.O.S.	TOP-OF-STEEL
T.O.C.	TOP-OF-CONC. OR TOP-OF-CURB
T.P.	TOILET PAPER
TRANS.	TRANSLUCENT
T.S.	TUBE STEEL
TYP.	TYPICAL (FOR SIM. CONDITIONS)
U.G.	UNDERGROUND
UNFIN.	UNFINISHED
U.N.O.	UNLESS NOTED OTHERWISE
V.B.	VAPOR BARRIER
V.C.T.	VINYL COMPOSITION TILE (RESILIENT TILE)
VERT.	VERTICAL
VEST.	VESTIBULE
VFY.	VERIFY
VIF	VERIFY IN FIELD
VLT.	VAULT
V.W.C.	VINYL WALL COVERING
V.T.P.	VINYL TACK BOARD PANEL
W.	WEST OR WIDE
WD.	WOOD
WDW.	WINDOW
W.F.	WIDE-FLANGE STEEL MEMBER
W.G.	WIRE GLASS
W.H.	WALL HYDRANT
W/	WITH
W/H	WATER HEATER
W/O	WITHOUT
W.R.	WATER RESISTANT
W.R.B.	WEATHER-RESISTANT BARRIER
WT.	WEIGHT
W.W.M.	WELDED WIRE MESH
W.O.	WHERE OCCURS
XFMR.	TRANSFORMER
YD.	YARD
L or ∠	ANGLE
℄	CENTERLINE
C or [	CHANNEL
ø	ROUND or DIAMETER
X	BY
#	NUMBER or POUNDS
@	AT
±	APPROXIMATELY(PLUS OR MINUS)
&	AND
°	DEGREES

HKA

Harlan Krusemark - Architect
4415 Cowell Road, Suite 230
Concord, CA 94521
Tel: 925.681.1905
Fax: 925.681.1906

Revisions | Date

HAWKINS SCHOOL
(INCREMENTS #1 & #2)

475 Darlene Lane
Tracy, CA 95377

Jefferson School District
7500 West Linne Road
Tracy, CA 95304

DSA FILE NO. 39-39
IDENTIFICATION STAMP
DIVISION OF THE STATE ARCHITECT
APPL 02 -102225
AC [signature] FLS [signature] SS
DATE AUG 2 4 2000

Sheet Title:
GENERAL INFORMATION,
SHEET INDEX

Printing Date / Purpose:
8/18/00 - DSA APPROVAL

Scale: NONE
Project Number: 9903.00
Sheet Number:

A0.1

of Sheets

FILE: 9910/A0.1

COPYRIGHT © 2000 HARLAN KRUSEMARK - ARCHITECT (HKA) THESE DRAWINGS ARE PROPRIETARY DOCUMENTS OF HKA AND ARE NOT TO BE DISTRIBUTED, PUBLISHED OR REPRODUCED WITHOUT WRITTEN PERMISSION OF HKA.

CODE SUMMARY

CALCULATION OF BUILDING AREA (SQ. FT.)

- BLDG A 2778
- BLDG B 2880
- BLDG C 3840
- BLDG D 6720
- BLDG E 3840
- BLDG F 3840
- BLDG G 5760
- BLDG H 2880
- BLDG J 2880
- BLDG K 2778
- BLDG L 2298
- BLDG M 11,444

TOTAL BLDG. AREA = 51,936 SQ. FT.

CHAPTER 3: USE OR OCCUPANCY

OCCUPANCY GROUP:		
	A-2.1	ASSEMBLY (CBC SECT. 303)
	A-3	ASSEMBLY (CBC SECT. 303)
	B	BUSINESS (CBC SECT.304)
	E-1	EDUCATIONAL (CBC SECT. 305)
	E-2	EDUCATIONAL (CBC SECT. 305)
	S-1	STORAGE (CBC SECT. 311)
	S-2	STORAGE (CBC SECT. 311)

1-HR. OCCUPANCY SEPARATION REQUIRED BETWEEN B & E OCCUPANCIES (CBC Table 3-B).
1-HR. OCCUPANCY SEPARATION REQUIRED BETWEEN S-1 & A-2.1 AND S-1 & E (CBC Table 3-B) OCCUPANCIES.

1-HR. OCCUPANCY SEPARATION REQUIRED BETWEEN S-2 & A-2.1 AND S-1 & E
20' WIDE ACCESS TO 20' WIDE RIGHT-OF-WAYS ARE PROVIDED VIA THE DARLENE LANE DRIVEWAYS.

CHAPTER 4: SPECIAL USE AND OCCUPANCY

MULTI-PURPOSE ROOM HAS A PLATFORM, NOT A STAGE. A PLATFORM MAY NOT HAVE OVERHEAD HANGING CURTAINS OR DROPS, SCENERY, OR STAGE EFFECTS OTHER THAN LIGHTING (Sect. 409.1.2).

CHAPTER 5: BUILDING LIMITATIONS
NOTE: AUTOMATIC FIRE-SPRINKLER SYSTEM THROUGHOUT ALL BUILDINGS. (CBC Sect. 505.3 MODIFIES CBC TABLE 5-B TO TRIPLE ALLOWABLE AREAS, EXCEPT AT BLDG. M*).

BLDG.	OCC. GR.	STORIES	ALLOWABLE FLR. AREA (SF)	ACTUAL FLR. AREA (SF)	REMARKS
A,B,J	B, E-1, S-1	1	25,881	8,538 = O.K.	B=32%, E-1=57%, S-1=11%
C	E-1	1	27,300	3,840 = O.K.	
D	E-1	1	27,300	6,720 = O.K.	
E	E-1	1	27,300	3,840 = O.K.	
F	E-1	1	27,300	3,840 = O.K.	
G	E-1	1	27,300	5,760 = O.K.	
H	E-1	1	27,300	2,880 = O.K.	
K	E-1	1	27,300	2,778 = O.K.	
L	E-1	1	27,300	2,298 = O.K.	
M	A-2.1, A-3, B, E-2, S-1, S-2	1	19,248	11,760 = O.K.	* A-2.1=54%, A-3=5%, B=11%, E-2=14%, S-1=5%, S-2=7.5%

*NOTE: FIRE-RESISTIVE SUBSTITUTION PER CBC Sect. 508 OF TYPE V-NON-RATED CONSTRUCTION WITH AUTOMATIC FIRE-SPRINKLER SYSTEM FOR TYPE V-1 HR. CONSTRUCTION; 100% ALLOWABLE AREA INCREASE FOR SEPARATION ON 3 SIDES PER CBC Sect. 505.1.2.

ALLOWABLE HEIGHT
40 FEET**, 1 STORY, TYPE V-N (CBC Table 5-B)

~~**BLDG. M HAS A TOWER OF NON-COMBUSTIBLE CONSTRUCTION PER CBC Sect. 506.~~

EXTERIOR WALL AND OPENING PROTECTION (CBC Table 5-A):

OCC. GR.	CONST	(NON-BEARING) EXTER. WALLS	OPENINGS	REMARKS
A-2.1	V-1	2-HR. < 10 FT. 1-HR. ELSEWHERE	PROTECT < 10 FT. NONE < 5 FT.	NOT APPLICABLE
A-3	V-1	2-HR. < 5 FT. 1-HR. ELSEWHERE	PROTECT < 10 FT. NONE < 5 FT.	NOT APPLICABLE
B	V-N	1-HR. < 20 FT. NR ELSEWHERE	PROTECT < 10 FT. NONE < 5 FT.	NOT APPLICABLE
E-1, E-2	V-N	2-HR. < 5 FT. 1-HR. < 10 FT. NR ELSEWHERE	PROTECT < 10 FT. NONE < 5 FT.	NOT APPLICABLE
S-1	V-N	1-HR. < 20 FT. NR. ELSEWHERE	PROTECT < 10 FT. NONE < 5 FT.	NOT APPLICABLE
S-2	V-N	1-HR. < 5 FT. NR. ELSEWHERE	PROTECT < 10 FT. NONE < 5 FT.	NOT APPLICABLE

CHAPTER 6: TYPES OF CONSTRUCTION - FIRE RESISTIVE REQUIREMENTS
(TABLE 6-A) TYPE V - NO FIRE-RESISTIVE REQUIREMENTS.

1. BEARING WALLS - EXTERIOR	NOT REQUIRED
2. BEARING WALLS - INTERIOR	NOT REQUIRED
3. NONBEARING WALLS - EXTERIOR	NOT REQUIRED
4. STRUCTURAL FRAME	NOT REQUIRED
5. PARTITIONS - PERMANENT	NOT REQUIRED
6. SHAFT ENCLOSURE	NOT REQUIRED (1-HR. FIRE RESISTIVE CONST. @ BLDG. M)
7. FLOORS AND FLOOR-CEILINGS	NOT REQUIRED
8. ROOFS AND ROOF-CEILINGS	NOT REQUIRED

CHAPTER 7: FIRE RESISTANT CONSTRUCTION

INSULATION AT 1 HR. OCCUPANCY SEPARATIONS SHALL COMPLY WITH CBC Sect. 707.

PARTITIONS AT 1 HR. OCCUPANCY SEPARATIONS SHALL COMPLY WITH CBC Sect. 709.1 AND Table 7-B, Item 16-1.1.

ASSEMBLIES FOR PROTECTION OF OPENINGS AT 1 HR. OCCUPANCY SEPARATIONS SHALL COMPLY WITH CBC Sect. 713.

THROUGH-PENETRATION FIRE STOPS AT 1 HR. OCCUPANCY SEPARATIONS SHALL COMPLY WITH CBC Sect. 714.

CHAPTER 9: FIRE-PROTECTION SYSTEMS

AUTOMATIC SPRINKLER SYSTEM SHALL BE PROVIDED THROUGHOUT ALL BUILDINGS AND SHALL COMPLY WITH APPLICABLE PORTIONS OF CBC CHAPTER 9 AND NFPA-13-1996 (INSTALLATION OF SPRINKLER SYSTEMS AS AMENDED PER CBC SECTION 3505.10.)

CHAPTER 10: MEANS OF EGRESS

SAFE DISPERSAL AREAS SHALL BE LOCATED AT LEAST 50' FROM BUILDINGS AND SIZED TO ALLOW NOT LESS THAN 3 SF PER OCCUPANT (Sect. 1007.3.11).

CHAPTER 11B: ACCESSIBILITY

ALL PORTIONS OF BUILDINGS CLASSIFIED AS A-2.1, A-3, B, AND E OCCUPANCY GROUPS SHALL BE ACCESSIBLE TO PERSONS WITH DISABILITIES AS REQUIRED BY CBC CHAPTER 11B.

SPECIAL TESTING AND INSPECTIONS

SPECIAL INSPECTIONS AND TESTING PER THE 1998 CALIFORNIA BUILDING CODE, SECTIONS 1701A & 2291A, ARE REQUIRED DURING CONSTRUCTION OF THE FOLLOWING TYPES OF WORK:

1. SPECIAL GRADING, EXCAVATION, AND FILLING PER 1701A.5.13.
2. CONCRETE REINFORCEMENT.
3. CONCRETE PER 1701A.5.1.
4. BOLTS INSTALLED IN CONCRETE PER 1701A.5.2.
5. STRUCTURAL STEEL PER 1701A.5 & 2291A.5.
6. HIGH-STRENGTH BOLTING PER 1701A.5.6.
7. STRUCTURAL WELDING PER 1701A.5.5 & 2291A.5.
8. SHEAR & BOLT STRENGTH TESTING OF MASONRY VENEER ASSEMBLIES PER 1405A.

MAJOR GOVERNING CODES

A. CALIFORNIA CODE OF REGULATIONS:

TITLE 8 - INDUSTRIAL SAFETY
TITLE 19 - PUBLIC SAFETY
TITLE 21 - PUBLIC WORKS
TITLE 24 -

PART 1: ADMINISTRATIVE REGULATIONS	- 1998
PART 2: CALIFORNIA BUILDING CODE	- 1998
PART 3: CALIFORNIA ELECTRICAL CODE	- 1998
PART 4: CALIFORNIA MECHANICAL CODE	- 1998
PART 5: CALIFORNIA PLUMBING CODE	- 1998
PART 9: CALIFORNIA FIRE CODE	- 1998
PART 12: CALIFORNIA REFERENCE STANDARDS CODE	- 1998

B. REGULATIONS OF THE DIVISION OF THE STATE ARCHITECT OF THE STATE OF CALIFORNIA:

STRUCTURAL SAFETY SECTION
FIRE AND LIFE SAFETY SECTION
ACCESS COMPLIANCE SECTION

C. UNIFORM BUILDING CODE STANDARDS

D. LOCAL AIR QUALITY MANAGEMENT CONTROL DISTRICT

E. PARTIAL LIST OF APPLICABLE NFPA STANDARDS:

NFPA 13 (CBC AMENDED PER SECTION 3505.10) -AUTOMATIC SPRINKLER SYSTEMS	- 1996 EDITION
NFPA 14 - STANDPIPE SYSTEMS	- 1996 EDITION
NFPA 17A - WET CHEMICAL SYSTEM	- 1994 EDITION
NFPA 24 - PRIVATE FIRE MAINS	- 1995 EDITION
NFPA 72 (CBC AMENDED PER SECTION 3505.1) -NATIONAL FIRE ALARM CODES	- 1996 EDITION
NFPA 253 - CRITICAL RADIANT FLUX OF FLOOR COVERING SYSTEMS	- 1984 EDITION

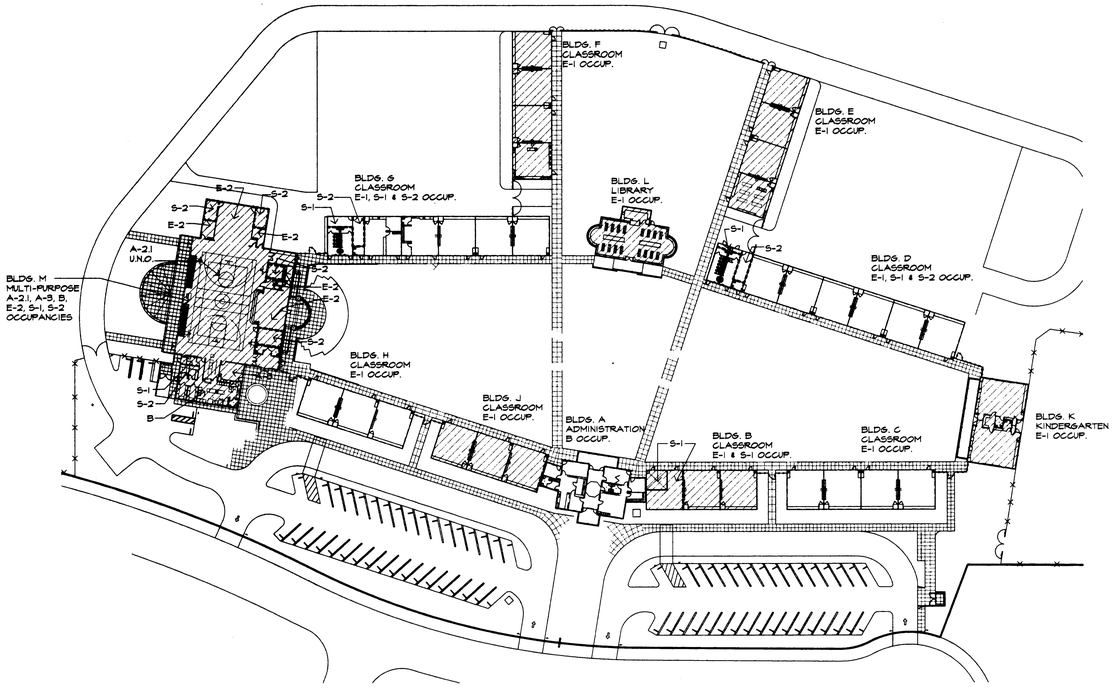

2 / A0.2 SITE PLAN - OCCUPANCY (REF. CBC CHAPTER. 3 AND TABLE 3-B)
SCALE: 1" = 50'-0"

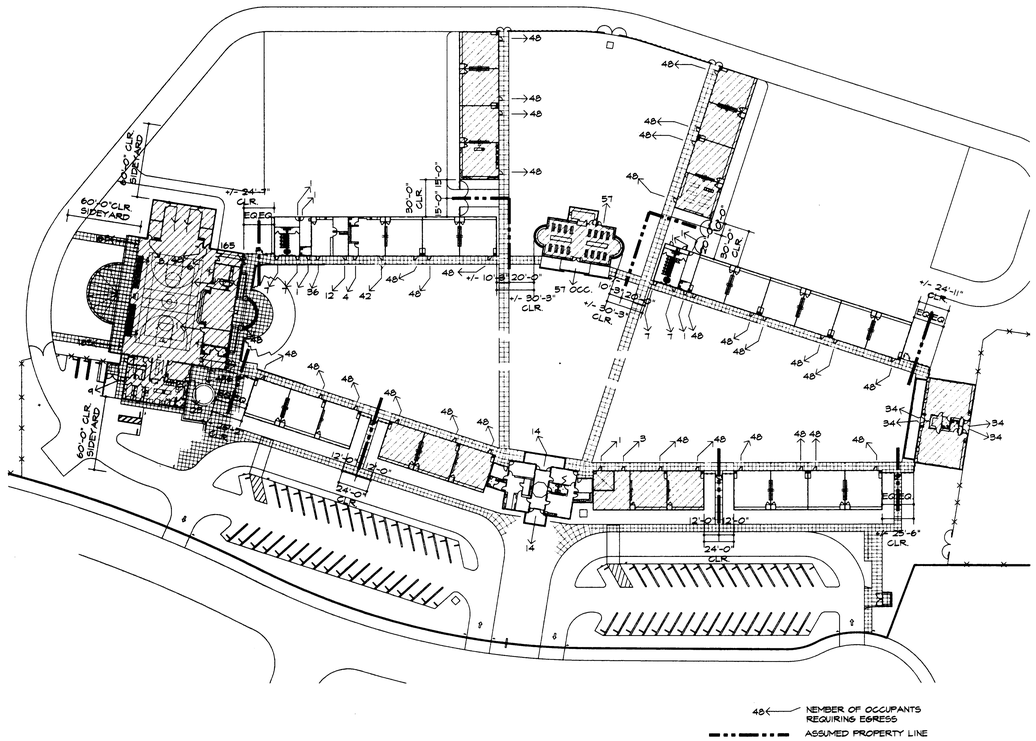

1 / A0.2 SITE PLAN - EGRESS (REF. CBC CHAPTER 5, TABLE 5-A, CHAPTER 10 AND TABLE 10-A)
SCALE: 1" = 50'-0"

HKA
Harlan Krusemark - Architect
4415 Cowell Road, Suite 230
Concord, CA 94521
Tel: 925.681.1905
Fax: 925.681.1906

REGISTERED ARCHITECT HARLAN KRUSEMARK No. 12933 Exp. 9/30/01 STATE OF CALIFORNIA

Revisions	Date

HAWKINS SCHOOL
(INCREMENTS #1 & #2)

475 Darlene Lane
Tracy, CA 95377

Jefferson School District
7500 West Linne Road
Tracy, CA 95304

DSA FILE NO. 39-39
IDENTIFICATION STAMP
DIVISION OF THE STATE ARCHITECT
APPL 02 -102225
AC FLS SS
DATE AUG 2 4 2000

Sheet Title:
CODE ANALYSIS

Printing Date / Purpose:
8/18/00 - DSA APPROVAL

Scale: None
Project Number: 9903.00
Sheet Number:

A0.2

of Sheets

FILE: 9910/A0.2

COPYRIGHT © 2000 HARLAN KRUSEMARK - ARCHITECT (HKA) THESE DRAWINGS ARE PROPRIETARY DOCUMENTS OF HKA AND ARE NOT TO BE DISTRIBUTED, PUBLISHED OR REPRODUCED WITHOUT WRITTEN PERMISSION OF HKA.

GENERAL NOTES:

1. IF ARCHAEOLOGY MATERIALS ARE UNCOVERED DURING GRADING, TRENCHING OR OTHER EXCAVATION, EARTHWORK WITHIN 200 FEET OF THESE MATERIALS SHALL BE STOPPED UNTIL A PROFESSIONAL ARCHAEOLOGIST WHO IS CERTIFIED BY THE SOCIETY OF CALIFORNIA ARCHAEOLOGY (SCA) AND/OR THE SOCIETY OF PROFESSIONAL ARCHAEOLOGY (SOPA) HAS HAD AN OPPORTUNITY TO EVALUATE THE SIGNIFICANCE OF THE FIND AND SUGGEST APPROPRIATE MITIGATION MEASURES, IF THEY ARE DEEMED NECESSARY.

2. IT SHALL BE THE CONTRACTOR'S RESPONSIBILITY TO MAINTAIN CONTROL OF THE ENTIRE CONSTRUCTION OPERATION AND TO THIS END KEEP THE ENTIRE SITE FREE FROM EROSION. CONTRACTOR SHALL INSTALL AND MAINTAIN ANY DEVICES AND MEASURES NECESSARY TO THE SATISFACTION OF THE CITY ENGINEER DURING THE PERIOD OF OCTOBER 15 TO APRIL 15. AT ALL TIMES DURING CONSTRUCTION THE CONTRACTOR SHALL BE RESPONSIBLE FOR THE MAINTENANCE OF EROSION CONTROL AT THE SITE. THE CONTRACTOR WILL BE RESPONSIBLE FOR ANY DAMAGE CAUSED BY A LACK OF EROSION CONTROL. IN ADDITION THE CONTRACTOR SHALL BE RESPONSIBLE FOR ANY FINES OR CHARGES RESULTING FROM EROSION. THE CONTRACTOR SHALL COMPLY WITH N.P.D.E.S. AND LOCAL STANDARDS REGARDING EROSION CONTROL, AND PERFORM ALL WORK IN ACCORDANCE WITH THE STORM WATER POLLUTION PREVENTION PLAN ON FILE WITH THE CITY OF TRACY.

3. THE CONTRACTOR SHALL BE RESPONSIBLE FOR REQUIRED INSPECTIONS AND SHALL MAKE PROPER (48 HOURS PRIOR) NOTIFICATION TO THE CITY INSPECTOR, OR OTHER REQUIRED INDIVIDUALS OR PUBLIC AGENCIES.

4. CONTRACTOR AGREES THAT HE SHALL ASSUME SOLE AND COMPLETE RESPONSIBILITY FOR THE JOB SITE CONDITIONS DURING THE COURSE OF CONSTRUCTION OF THIS PROJECT, INCLUDING SAFETY OF ALL PERSONS AND PROPERTY, THAT THIS REQUIREMENT SHALL APPLY CONTRACTOR SHALL DEFEND, INDEMNIFY AND HOLD THE OWNER, THE ENGINEER AND THE CITY OF TRACY HARMLESS FROM ANY AND ALL LIABILITY, REAL OR ALLEGED, IN CONNECTION WITH THE PERFORMANCE OF WORK ON THIS PROJECT, EXCEPTING FOR LIABILITY ARISING FROM THE SOLE NEGLIGENCE OF THE OWNER, ENGINEER OR THE CITY OF TRACY PUBLIC WORKS DEPARTMENT.

5. THE CONTRACTOR SHALL CONDUCT HIS WORK IN SUCH A MANNER AS TO NOT INTERFERE OR BLOCK EXISTING DRAINAGE. MANNER OF MAINTAINING DRAINAGE SHALL BE SUBJECT TO ACCEPTANCE OF ENGINEER.

6. ENCROACHMENT PERMITS REQUIRED FOR WORK WITHIN EXISTING PUBLIC RIGHTS-OF-WAY SHALL BE OBTAINED BY THE CONTRACTOR.

7. THE EXISTENCE AND LOCATION OF ANY UNDERGROUND UTILITY PIPELINES OR STRUCTURES SHOWN ON THESE PLANS ARE OBTAINED BY A SEARCH OF THE AVAILABLE RECORDS AND IN SOME CASES BY FIELD SURVEY. APPROVAL OF THESE PLANS BY THE DIVISION OF THE STATE ARCHITECT DOES NOT CONSTITUTE A REPRESENTATION AS THE THE ACCURACE OR COMPLETENESS OF THE LOCATION OR EXISTENCE OR NON-EXISTENCE OF ANY UNDERGROUND UTILITIES OR STRUCTURES WITHIN THE LIMITS OF THIS PROJECT. THE CONTRACTOR IS REQUIRED TO TAKE ALL DUE PRECAUTIONARY MEANS TO PROTECT THE UTILITIES AND STRUCTURES NOT OF RECORD OR NOT SHOWN ON THESE PLANS, UNLESS OTHERWISE DIRECTED BY THE ENGINEER. THE CONTRACTOR SHALL NOTIFY UNDERGROUND SERVICE ALERT (U.S.A.) AT 1-800- 227-2600, 48 HOURS PRIOR TO ANY EXCAVATION.

8. IT SHALL BE THE CONTRACTOR'S RESPONSIBILITY TO COORDINATE CONSTRUCTION WITH THE UTILITY AGENCIES AND TO PROVIDE ALL CONNECTIONS TO WORK PROVIDED BY UTILITY AGENCIES FOR COMPLETE AND FULLY OPERATIONAL UTILITIES.

9. THE CONTRACTOR SHALL BE RESPONSIBLE TO KEEP ALL PUBLIC RIGHTS-OF-WAY AND OFF-SITE AREAS CLEAN FROM ALL DIRT, MUD, DUST, AND DEBRIS AT ALL TIMES.

10. DUST CONTROL AND NOISE CONTROL:
AT ALL TIMES DURING CONSTRUCTION AND UNTIL FINAL COMPLETION, THE CONTRACTOR, WHEN HE OR HIS SUBCONTRACTOR ARE OPERATING EQUIPMENT ON THE SITE, SHALL PREVENT THE FORMATION OF ANY AIRBORNE NUISANCE BY WATERING AND/OR TREATING THE SITE OF THE WORK IN SUCH A MANNER THAT WILL CONFINE DUST PARTICLES TO THE IMMEDIATE SURFACE OF THE WORK. THE CONTRACTOR WILL BE RESPONSIBLE FOR ANY DAMAGE CAUSED BY DUST FROM HIS OWN ACTIVITIES OR HIS SUBCONTRACTOR'S ACTIVITIES IN PERFORMING THE WORK UNDER THIS CONTRACT, AND SHALL BE RESPONSIBLE FOR ANY CITATIONS, FINES OR CHARGES RESULTING FROM DUST NUISANCE. IN ADDITION, THE NOISE LEVEL OF THE CONTRACTOR'S OPERATION SHALL BE KEPT TO A MINIMUM AS PER CITY OF TRACY ORDINANCES. THE CONTRACTOR SHALL ENSURE THAT A WATER VEHICLE FOR DUST CONTROL OPERATIONS IS KEPT READY AND AVAILABLE AT ALL TIMES DURING CONSTRUCTION AS REQUIRED.

11. WHEREVER SLOPE RATIOS ARE CALLED OUT, IT SHALL BE UNDERSTOOD THAT THE FIRST NUMBER REFERS TO HORIZONTAL DISTANCE AND THE SECOND NUMBER REFERS TO VERTICAL DISTANCE: I.E., 2:1 IS 2 HORIZONTAL TO 1 VERTICAL.

12. ANY UNDERGROUND STRUCTURES SUCH AS CESSPOOLS, CISTERNS, MINING SHAFTS, TUNNELS, SEPTIC TANKS, WELLS AND PIPE LINES NOT LOCATED PRIOR TO CONSTRUCTION SHALL BE BROUGHT TO THE ATTENTION OF THE ENGINEER FOR DETERMINATION OF APPROPRIATE ACTION SUCH AS REMOVAL OR TREATMENT IN A MANNER JUDGED SUITABLE BY THE AUTHORITY HAVING JURISDICTION.

13. THE CIVIL ENGINEER ASSUMES NO RESPONSIBILITY BEYOND THE ADEQUACY OF HIS DESIGN CONTAINED HEREIN. SHOULD IT APPEAR THAT THE WORK TO BE PERFORMED, OR ANY MATTER RELATIVE THERETO IS NOT SUFFICIENTLY DETAILED OR EXPLAINED ON THESE PLANS, THE CONTRACTOR SHALL CONTACT THE ARCHITECT/ENGINEER FOR FURTHER CLARIFICATION.

14. ALL EXISTING ELEVATIONS AND DIMENSIONS SHOWN, EITHER AS MEASURED IN THE FIELD OR AS SHOWN ON THE PLANS FOR EXISTING IMPROVEMENTS, SHALL BE VERIFIED IN THE FIELD BY THE CONTRACTOR PRIOR TO ANY WORK.

15. THE CONTRACTOR SHALL NOT DISTURB OR DESTROY ANY PERMANENT SURVEY POINTS WITHOUT THE CONSENT OF THE AUTHORITY HAVING JURISDICTION. ANY PERMANENT MONUMENT POINTS DISTURBED OR DESTROYED SHALL BE REPLACED BY A LICENSED ENGINEER OR LICENSED SURVEYOR AT THE CONSTRACTOR'S EXPENSE.

16. SANITARY FACILITIES SHALL BE PROVIDED AND MAINTAINED BY THE CONTRACTOR ON THE SITE.

17. ALL WORK SHALL BE DONE IN ACCORDANCE WITH THE CURRENT CITY OF TRACY STANDARD DETAILS, SPECIFICATIONS, AND STATE OF CALIFORNIA STANDARD SPECIFICATIONS.

18. NO CHANGE SHALL BE MADE IN THE FIELD PRIOR TO RESUBMITTAL AND APPROVAL BY THE DIVISION OF THE STATE ARCHITECT OF REVISED PLANS.

19. AN ENCROACHMENT PERMIT SHALL BE OBTAINED FROM THE SAN JOAQUIN COUNTY FLOOD CONTROL AND WATER CONSERVATION DISTRICT PRIOR TO THE COMMENCEMENT OF ANY WORK WITHIN DISTRICT RIGHTS-OF-WAY AND FOR THE CONSTRUCTION, MODIFICATION, OR CONNECTION TO DISTRICT-MAINTAINED FACILITIES. ALL WORKMANSHIP, EQUIPMENT, AND MATERIALS SHALL CONFORM TO DISTRICT STANDARDS AND SPECIFICATIONS.

20. ALL EXISTING STREETS SHALL REMAIN OPEN TO TWO-WAY TRAFFIC AT ALL TIMES EXCEPT AS PERMITTED BY THE CITY ENGINEER.

21. THE CONTRACTOR SHALL PROVIDE INGRESS AND EGRESS FOR PRIVATE PROPERTY ADJACENT TO THE WORK SITE THROUGHOUT THE PERIOD OF CONSTRUCTION.

22. ALL NON-TEMPORARY UTILITIES INCLUDING BUT NOT LIMITED TO ELECTRIC, TELEPHONE AND CABLE TELEVISION SERVICES, SHALL BE PROVIDED UNDERGROUND IN ACCORDANCE WITH CITY OF TRACY SUBDIVISION STANDARDS.

23. THE CONTRACTOR SHALL PROVIDE ALL LIGHTS, SIGNS, BARRICADES, FLAGMEN OR OTHER DEVICES NECESSARY TO PROVIDE FOR PUBLIC SAFETY.

24. ALL UNDERGROUND UTILITIES SHALL BE COMPLETED BEFORE PLACING BASE ROCK.

25. IT SHALL BE THE RESPONSIBILITY OF THE CONTRACTOR TO COORDINATE ALL NECESSARY UTILITY RELOCATIONS WITH THE APPROPRIATE UTILITY COMPANY.

26. THE CONTRACTOR SHALL EXPOSE EXISTING UTILITIES PRIOR TO COMMENCING ANY ON-SITE WORK. THE CONTRACTOR SHALL ALWAYS BEGIN WORK AT THE DOWNSTREAM POINT OF CONNECTION AND PROCEED UPSTREAM. IF UTILITY INVERTS DO NOT CORRESPOND TO THE PLANS, THE CONTRACTOR SHALL NOTIFY THE ARCHITECT/ENGINEER BEFORE PROCEEDING.

27. ALL ABOVE-GROUND WATER FACILITIES SHALL BE INSTALLED OUTSIDE PUBLIC RIGHTS-OF-WAY.

28. STORM DRAIN, SANITARY SEWER AND WATER LINE CONNECTIONS MADE TO EXISTING FACILITIES SHALL BE MADE BY CONTRACTOR TO EXISTING STUBS OR STRUCTURES AS IDENTIFIED IN THESE CONTRACT DOCUMENTS.

29. OFF-SITE TRENCH BACKFILL SHALL BE IN ACCORDANCE WITH THE CITY OF TRACY TRENCH BACKFILL SPECIFICATIONS. ON-SITE TRENCH BACKFILL SHALL BE IN ACCORDANCE WITH THESE CONTRACT DOCUMENTS.

30. NO CONCRETE SIDEWALK SHALL BE PLACED UNTIL ALL UTILITIES INCLUDING CABLE TELEVISION AND STREET LIGHT CONDUIT ARE IN PLACE.

31. CASARON OR AN EQUIVALENT HERBICIDE SHALL BE PLACED UNDER ALL CURB, GUTTER AND SIDEWALKS IN THE PUBLIC RIGHTS-OF-WAY AND EASEMENT AREAS.

32. A MINIMUM 16" DEEP ROOT BARRIER SHALL BE PLACED ADJACENT TO CONCRETE AT THE FOLLOWING LOCATIONS:

A. ON ALL SIDES OF TREE WELLS; AND

B. A MINIMUM 10' IN LENGTH AT BACKS OF CURBS AND EDGES OF SIDEWALKS ADJACENT TO TREE PLANTING AREAS IF TREE IS WITHIN 8' OF CONCRETE.

33. THE CONTRACTOR SHALL DO WHATEVER IS NECESSARY TO MAKE A SMOOTH TRANSITION FROM EXISTING PAVEMENT TO NEW ASPHALT CONCRETE AT ALL LOCATIONS.

SITE GRADING NOTES

1. ALL SITE CLEARING, GRUBBING AND EARTHWORK SHALL BE DONE IN ACCORDANCE WITH THE PROJECT SOILS REPORT.

2. CONTRATCOR SHALL REFER TO THE PROJECT SPECIFICATIONS FOR ADDITIONAL REQUIREMETNS REGARDING SITE WORK.

3. CONTRACTOR SHALL COMPLY WITH THE PROJECT SPECIFICATIONS AND CITY OF TRACY REQUIREMENTS REGARDING DUST AND EROSION CONTROL.

STORM DRAIN NOTES:

1) THE CONTRACTOR SHALL PROVIDE SHORING AND/OR PROVISIONS TO PROTECT WORKERS FOR ALL EXCAVATIONS IN ACCORDANCE WITH O.S.H.A. STANDARDS.

2) MANHOLES SHALL BE ADJUSTED TO FINISHED GRADE. COSTS FOR ADJUSTING FACILITIES AFTER FINAL PAVING AND FINISH WORK SHALL BE INCLUDED IN THE STRUCTURE UNIT PRICE AND BE A PART OF WORK BID.

3) CONTRACTOR SHALL INSTALL STORM LINE CLEANOUTS AT THE END OF ALL 6" SD LINES AS INDICATED ON THESE CONTRACT DOCUMENTS. CLEANOUTS SHALL BE HOUSED IN A CHRISTY F-14 CONC. VALVE BOX WITH A CHRISTY F8D LID AND GRADED FLUSH WITH ADJOINING CONCRETE SURFACES.

4) ALL ROOF DOWNSPOUTS SHALL BE CONNECTED TO THE CLOSED CONDUIT STORM DRAIN SYSTEM USING 6" SCHEDULE 40 PVC.

5) CONTRACTOR SHALL REFER TO THE PROJECT SPECIFICATIONS FOR ADDITIONAL INFORMATION REGARDING PIPE AND STRUCTURE MATERIALS AND INSTALLATION OF STORM DRAIN FACILITIES

STORM DRAIN SCHEDULE

SHEET	INLET #	INLET TYPE	DESCRIPTION
C2.1	CB #1	CATCH BASIN	24" X 24" CATCH BASIN SANTA ROSA MODEL 2K OR EQUIVALENT W/ STD BICYCLE GRATE
C2.1	CB #2	CATCH BASIN	12" X 12" CATCH BASIN SANTA ROSA MODEL EK OR EQUIVALENT W/STD BICYCLE GRATE
C2.1	CB #3	CATCH BASIN	12" X 12" CATCH BASIN SANTA ROSA MODEL EK OR EQUIVALENT W/STD BICYCLE GRATE
C2.1	CB #4	CATCH BASIN	12" X 12" CATCH BASIN SANTA ROSA MODEL EK OR EQUIVALENT W/STD BICYCLE GRATE
C2.1	CB #5	CATCH BASIN	12" X 12" CATCH BASIN SANTA ROSA MODEL EK OR EQUIVALENT W/STD BICYCLE GRATE
C2.1	CB #6	CATCH BASIN	12" X 12" CATCH BASIN SANTA ROSA MODEL EK OR EQUIVALENT W/STD BICYCLE GRATE
C2.1	CB #7	CATCH BASIN	24" X 24" CATCH BASIN SANTA ROSA MODEL 2K OR EQUIVALENT W/ STD BICYCLE GRATE
C2.1	CB #8	CATCH BASIN	12" X 12" CATCH BASIN SANTA ROSA MODEL EK OR EQUIVALENT W/STD BICYCLE GRATE
C2.1	CB #10	CATCH BASIN	24" X 24" CATCH BASIN SANTA ROSA MODEL 2K OR EQUIVALENT W/ STD BICYCLE GRATE
C2.1	CB #11	CATCH BASIN	24" X 24" CATCH BASIN SANTA ROSA MODEL 2K OR EQUIVALENT W/ STD BICYCLE GRATE
C2.1	CB #12	CATCH BASIN	24" X 24" CATCH BASIN SANTA ROSA MODEL 2K OR EQUIVALENT W/ STD BICYCLE GRATE
C2.1	CB #13	CATCH BASIN	24" X 24" CATCH BASIN SANTA ROSA MODEL 2K OR EQUIVALENT W/ STD BICYCLE GRATE
C2.1	CB #14	CATCH BASIN	24" X 24" CATCH BASIN SANTA ROSA MODEL 2K OR EQUIVALENT W/ STD BICYCLE GRATE
C2.1	CB #15	CATCH BASIN	24" X 24" CATCH BASIN SANTA ROSA MODEL 2K OR EQUIVALENT W/ STD BICYCLE GRATE
C2.1	CB #16	CATCH BASIN	24" X 24" CATCH BASIN SANTA ROSA MODEL 2K OR EQUIVALENT W/ STD BICYCLE GRATE
C2.1	CB #17	CATCH BASIN	12" X 12" CATCH BASIN SANTA ROSA MODEL EK OR EQUIVALENT W/STD BICYCLE GRATE
C2.1	CB #18	CATCH BASIN	12" X 12" CATCH BASIN SANTA ROSA MODEL EK OR EQUIVALENT W/STD BICYCLE GRATE
C2.1	CB #19	CATCH BASIN	12" X 12" CATCH BASIN SANTA ROSA MODEL EK OR EQUIVALENT W/STD BICYCLE GRATE
C2.1	CB #20	CATCH BASIN	12" X 12" CATCH BASIN SANTA ROSA MODEL EK OR EQUIVALENT W/STD BICYCLE GRATE
C2.1	CB #21	CATCH BASIN	24" X 24" CATCH BASIN SANTA ROSA MODEL 2K OR EQUIVALENT W/ STD BICYCLE GRATE
C2.1	CB #22	CATCH BASIN	12" X 12" CATCH BASIN SANTA ROSA MODEL EK OR EQUIVALENT W/STD BICYCLE GRATE
C2.1	CB #23	CATCH BASIN	24" X 24" CATCH BASIN SANTA ROSA MODEL 2K OR EQUIVALENT W/ STD BICYCLE GRATE
C2.1	CB #24	CATCH BASIN	24" X 24" CATCH BASIN SANTA ROSA MODEL 2K OR EQUIVALENT W/ STD BICYCLE GRATE
C2.2	CB #25	CATCH BASIN	24" X 24" CATCH BASIN SANTA ROSA MODEL 2K OR EQUIVALENT W/ STD BICYCLE GRATE
C2.2	CB #26	CATCH BASIN	12" X 12" CATCH BASIN SANTA ROSA MODEL EK OR EQUIVALENT W/STD BICYCLE GRATE
C2.2	CB #27	CATCH BASIN	24" X 24" CATCH BASIN SANTA ROSA MODEL 2K OR EQUIVALENT W/ STD BICYCLE GRATE
C2.2	CB #28	CATCH BASIN	12" X 12" CATCH BASIN SANTA ROSA MODEL EK OR EQUIVALENT W/STD BICYCLE GRATE
C2.2	CB #29	CATCH BASIN	12" X 12" CATCH BASIN SANTA ROSA MODEL EK OR EQUIVALENT W/STD BICYCLE GRATE
C2.2	CB #30	CATCH BASIN	12" X 12" CATCH BASIN SANTA ROSA MODEL EK OR EQUIVALENT W/STD BICYCLE GRATE
C2.2	CB #31	CATCH BASIN	12" X 12" CATCH BASIN SANTA ROSA MODEL EK OR EQUIVALENT W/STD BICYCLE GRATE
C2.2	CB #32	CATCH BASIN	24" X 24" CATCH BASIN SANTA ROSA MODEL 2K OR EQUIVALENT W/ STD BICYCLE GRATE
C2.2	CB #33	CATCH BASIN	24" X 24" CATCH BASIN SANTA ROSA MODEL 2K OR EQUIVALENT W/ STD BICYCLE GRATE
C2.2	CB #34	CATCH BASIN	24" X 24" CATCH BASIN SANTA ROSA MODEL 2K OR EQUIVALENT W/ STD BICYCLE GRATE
C2.2	CB #35	CATCH BASIN	24" X 24" CATCH BASIN SANTA ROSA MODEL 2K OR EQUIVALENT W/ STD BICYCLE GRATE
C2.2	CB #36	CATCH BASIN	12" X 12" CATCH BASIN SANTA ROSA MODEL EK OR EQUIVALENT W/STD BICYCLE GRATE
C2.2	CB #37	CATCH BASIN	12" X 12" CATCH BASIN SANTA ROSA MODEL EK OR EQUIVALENT W/STD BICYCLE GRATE

STORM DRAIN SCHEDULE

SHEET	INLET #	INLET TYPE	DESCRIPTION
C2.2	CB #38	CATCH BASIN	24" X 24" CATCH BASIN SANTA ROSA MODEL 2K OR EQUIVALENT W/ STD BICYCLE GRATE
C2.2	CB #39	CATCH BASIN	24" X 24" CATCH BASIN SANTA ROSA MODEL 2K OR EQUIVALENT W/ STD BICYCLE GRATE
C2.2	CB #40	CATCH BASIN	24" X 24" CATCH BASIN SANTA ROSA MODEL 2K OR EQUIVALENT W/ STD BICYCLE GRATE
C2.2	CB #41	CATCH BASIN	24" X 24" CATCH BASIN SANTA ROSA MODEL 2K OR EQUIVALENT W/ STD BICYCLE GRATE
C2.2	CB #42	CATCH BASIN	24" X 24" CATCH BASIN SANTA ROSA MODEL 2K OR EQUIVALENT W/ STD BICYCLE GRATE
C2.2	CB #43	CATCH BASIN	24" X 24" CATCH BASIN SANTA ROSA MODEL 2K OR EQUIVALENT W/ STD BICYCLE GRATE
C2.2	CB #44	CATCH BASIN	24" X 24" CATCH BASIN SANTA ROSA MODEL 2K OR EQUIVALENT W/ STD BICYCLE GRATE
C2.1	CB #45	CATCH BASIN	24" X 24" CATCH BASIN SANTA ROSA MODEL 2K OR EQUIVALENT W/ STD BICYCLE GRATE
C2.1	CB #46	CATCH BASIN	24" X 24" CATCH BASIN SANTA ROSA MODEL 2K OR EQUIVALENT W/HEAVY TRAFFIC GRATE
C2.1	CB #47	CATCH BASIN	24" X 24" CATCH BASIN SANTA ROSA MODEL 2K OR EQUIVALENT W/HEAVY TRAFFIC GRATE
C2.1	CB #48	CATCH BASIN	24" X 24" CATCH BASIN SANTA ROSA MODEL 2K OR EQUIVALENT W/HEAVY TRAFFIC GRATE
C2.1	CB #49	CATCH BASIN	24" X 24" CATCH BASIN SANTA ROSA MODEL 2K OR EQUIVALENT W/ STD BICYCLE GRATE
C2.1	CB #50	CATCH BASIN	12" X 12" CATCH BASIN SANTA ROSA MODEL EK OR EQUIVALENT W/STD BICYCLE GRATE
C2.1	CB #51	CATCH BASIN	24" X 24" CATCH BASIN SANTA ROSA MODEL 2K OR EQUIVALENT W/ STD BICYCLE GRATE
C2.1	CB #52	CATCH BASIN	12" X 12" CATCH BASIN SANTA ROSA MODEL EK OR EQUIVALENT W/STD BICYCLE GRATE
C2.1	CB #53	CATCH BASIN	24" X 24" CATCH BASIN SANTA ROSA MODEL 2K OR EQUIVALENT W/HEAVY TRAFFIC GRATE
C2.1	CB #54	CATCH BASIN	24" X 24" CATCH BASIN SANTA ROSA MODEL 2K OR EQUIVALENT W/HEAVY TRAFFIC GRATE
C2.2	CB #55	CATCH BASIN	24" X 24" CATCH BASIN SANTA ROSA MODEL 2K OR EQUIVALENT W/HEAVY TRAFFIC GRATE
C2.2	CB #56	CATCH BASIN	12" X 12" CATCH BASIN SANTA ROSA MODEL EK OR EQUIVALENT W/STD BICYCLE GRATE
C2.1	CB #57	CATCH BASIN	12" X 12" CATCH BASIN SANTA ROSA MODEL EK OR EQUIVALENT W/STD BICYCLE GRATE
C2.2	CB #58	CATCH BASIN	24" X 24" CATCH BASIN SANTA ROSA MODEL 2K OR EQUIVALENT W/ STD BICYCLE GRATE
C2.1	CB #60	CATCH BASIN	24" X 24" CATCH BASIN SANTA ROSA MODEL 2K OR EQUIVALENT W/ STD BICYCLE GRATE
C2.3	CB #61	CATCH BASIN	24" X 24" CATCH BASIN SANTA ROSA MODEL 2K OR EQUIVALENT W/ STD BICYCLE GRATE
C2.3	CB #62	CATCH BASIN	24" X 24" CATCH BASIN SANTA ROSA MODEL 2K OR EQUIVALENT W/ STD BICYCLE GRATE
C2.3	CB #63	CATCH BASIN	24" X 24" CATCH BASIN SANTA ROSA MODEL 2K OR EQUIVALENT W/ STD BICYCLE GRATE
C2.3	CB #65	CATCH BASIN	24" X 24" CATCH BASIN SANTA ROSA MODEL 2K OR EQUIVALENT W/ STD BICYCLE GRATE
C2.1	CB #66	CATCH BASIN	24" X 24" CATCH BASIN SANTA ROSA MODEL 2K OR EQUIVALENT W/ STD BICYCLE GRATE
C2.2	CB #67	CATCH BASIN	24" X 24" CATCH BASIN SANTA ROSA MODEL 2K OR EQUIVALENT W/HEAVY TRAFFIC GRATE
C2.2	CB #68	CATCH BASIN	24" X 24" CATCH BASIN SANTA ROSA MODEL 2K OR EQUIVALENT W/HEAVY TRAFFIC GRATE
C2.2	CB #69	CATCH BASIN	24" X 24" CATCH BASIN SANTA ROSA MODEL 2K OR EQUIVALENT W/HEAVY TRAFFIC GRATE
C2.2	CB #70	CATCH BASIN	12" X 12" CATCH BASIN SANTA ROSA MODEL EK OR EQUIVALENT W/STD BICYCLE GRATE
C2.2	CB #71	CATCH BASIN	24" X 24" CATCH BASIN SANTA ROSA MODEL 2K OR EQUIVALENT W/ STD BICYCLE GRATE
C2.2	CB #72	CATCH BASIN	12" X 12" CATCH BASIN SANTA ROSA MODEL EK OR EQUIVALENT W/STD BICYCLE GRATE

HKA
Harlan Krusemark - Architect
4415 Cowell Road, Suite 230
Concord, CA 94521
Tel: 925.681.1905
Fax: 925.681.1906

LICENSED ARCHITECT HARLAN KRUSEMARK No. C20803 Exp. 5/30/01 STATE OF CALIFORNIA

& Associates
MILANI
3480 Buskirk Avenue, Suite 225
Pleasant Hill, CA 94523
Tel: 925.941.1490
Fax: 925.941.1496

LICENSED CIVIL ENGINEER MARY GRACE MILANI 6-30-01 STATE OF CALIFORNIA

Revisions Date

HAWKINS SCHOOL
(INCREMENTS #1 & #2)

475 Darlene Lane
Tracy, CA 95377

Jefferson School District
7500 West Linne Road
Tracy, CA 95304

DSA FILE NO. 39-39
IDENTIFICATION STAMP
DIVISION OF THE STATE ARCHITECT
APPL 02 -102225
ACK FLS SS
DATE

Sheet Title:
GENERAL NOTES
ABBREV. & LEGEND

Printing Date / Purpose:
-

Scale: None
Project Number: 9903.00
Sheet Number:
C0.1
of Sheets

FILE:

COPYRIGHT © 2000 HARLAN KRUSEMARK - ARCHITECT (HKA) THESE DRAWINGS ARE PROPRIETARY DOCUMENTS OF HKA AND ARE NOT TO BE DISTRIBUTED, PUBLISHED OR REPRODUCED WITHOUT WRITTEN PERMISSION OF HKA

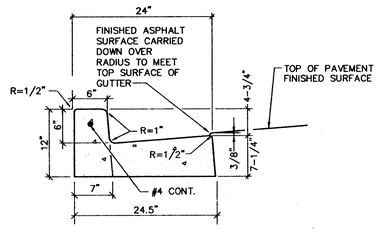

ALL CONCRETE TO BE CLASS B CONCRETE
(5 SACK CEMENT PER CUBIC YARD OF CONCRETE)

STANDARD CATCH CURB & GUTTER (1)

N.T.S.

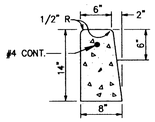

VERTICAL CURB (2)

N.T.S.

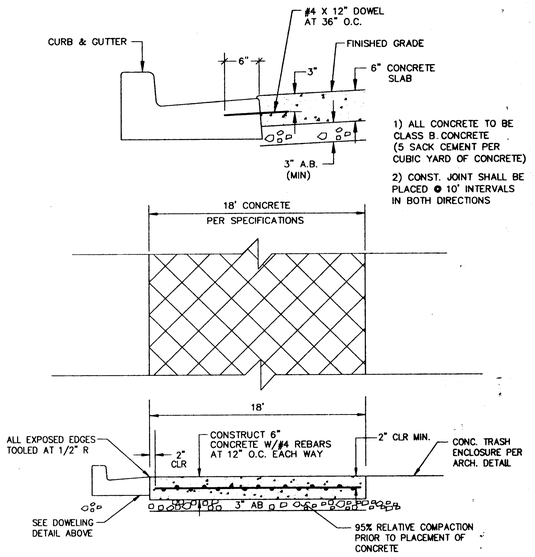

1) ALL CONCRETE TO BE CLASS B CONCRETE (5 SACK CEMENT PER CUBIC YARD OF CONCRETE)

2) CONST. JOINT SHALL BE PLACED @ 10' INTERVALS IN BOTH DIRECTIONS

CONCRETE SLAB AT TRASH ENCLOSURE (3)

N.T.S.

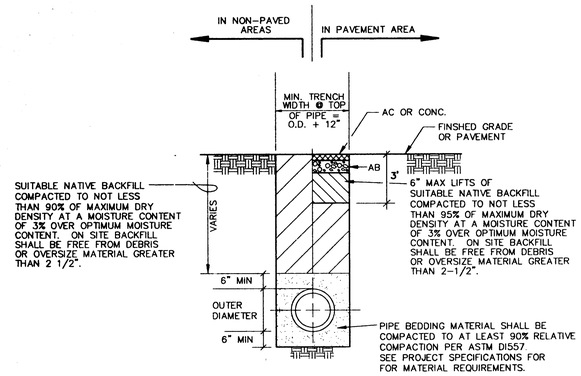

PIPE BEDDING AND BACKFILL DETAIL (4)

N.T.S.

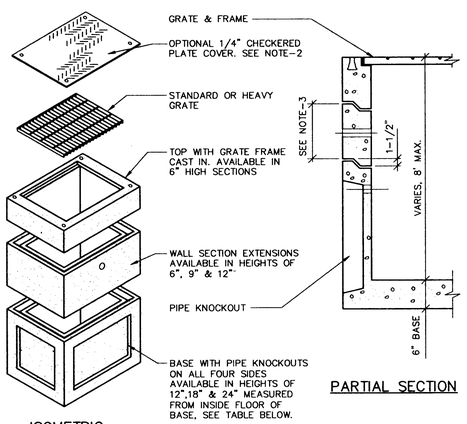

ISOMETRIC

PARTIAL SECTION

INLET TABLE

MODEL	INSIDE DIMENSION	WALL THICKNESS	SLAB THICKNESS	BASE HEIGHTS	MAX. KNOCKOUT SIZE (WxH)	WEIGHT IN LBS.
EK	12x12	4	4	12	11x11	310
BK	16x16	5	5	12	15x11	610
CK	18X18	4	4	18	17x17	560
2K	24x24	5	5	24	22x22	1210
1L	24x36	6	6	24	34x22	2650

NOTES :

1. BASES WITH KNOCKOUT ARE STANDARD ONLY IN THE MODELS AND SIZES INDICATED IN THE INLET TABLE. OTHER SIZES ARE AVAILABLE ON REQUEST.
2. OTHER SURFACE OPTIONS ARE AVAILABLE IN NON-STANDARD UINTS. SEE DRAWING NUMBER DI-SO FOR OPTIONS AVAILABLE.
3. HEIGHT SHOWN ABOVE ARE NOMINAL DIMENSIONS, ACTUAL DIMENSIONS VARY TO ALLOW FOR 1/2" MORTAR JOINT.

CATCH BASIN (5)

(N.T.S)

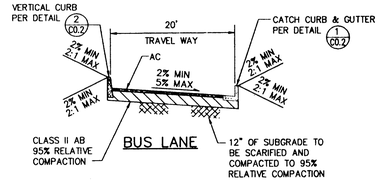

BUS LANE

PAVEMENT SECTIONS			
	AC	AB	TI
PLAY AREAS	2"	6"	–
PARKING STALLS	3"	9"	4.5
THRU-AISLE	3"	11"	5
BUS & EMERGENCY VEHICLE	3"	14.5"	6

STREET STRUCTURAL SECTIONS ARE PRELIMINARY. FINAL STRUCTURAL SECTIONS WILL BE DETERMINED BASED ON ACTUAL "R" VALUE TEST IN THE FIELD, FOLLOWING CALTRANS FLEXIBLE PAVEMENT DESIGN.

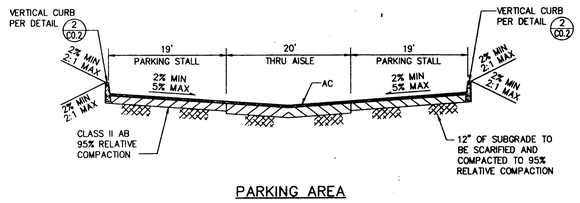

PARKING AREA

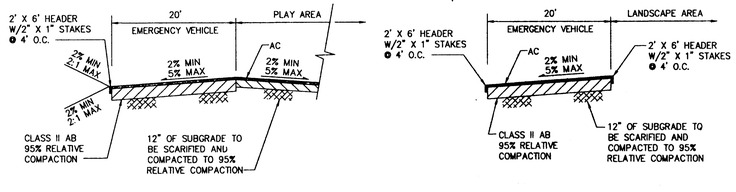

EMERGENCY VEHICLE ACCESS ROAD

TYPICAL PAVEMENT SECTIONS (6)

(N.T.S)

HKA
Harlan Krusemark - Architect
4415 Cowell Road, Suite 230
Concord, CA 94521
Tel: 925.681.1905
Fax: 925.681.1906

LICENSED ARCHITECT HARLAN KRUSEMARK No. C23603 Exp. 9/30/10 STATE OF CALIFORNIA

& Associates
MILANI
3480 Buskirk Avenue, Suite 225
Pleasant Hill, CA 94523
Tel: 925.941.1490
Fax: 925.941.1496

LICENSED CIVIL ENGINEER MARC DEACE HOFFMAN 40209 Expires: 12-30-01 STATE OF CALIFORNIA

Revisions	Date

HAWKINS SCHOOL
(INCREMENTS #1 & #2)

475 Darlene Lane
Tracy, CA 95377

Jefferson School District
7500 West Linne Road
Tracy, CA 95304

DSA FILE NO. 39-39
IDENTIFICATION STAMP
DIVISION OF THE STATE ARCHITECT
APPL 02 -102225
AC PLT FLS KKS SS
DATE

Sheet Title:
DETAILS

Printing Date / Purpose:
-

Scale: As Noted
Project Number: 9903.00
Sheet Number:

C0.2

of Sheets

FILE:

COPYRIGHT © 2000 HARLAN KRUSEMARK - ARCHITECT (HKA) THESE DRAWINGS ARE PROPRIETARY DOCUMENTS OF HKA AND ARE NOT TO BE DISTRIBUTED, PUBLISHED OR REPRODUCED WITHOUT WRITTEN PERMISSION OF HKA.

GENERAL EROSION NOTES:

TEMPORARY EROSION CONTROL MEASURES EFFECTIVE DURING RAINY SEASON OCTOBER 1 – APRIL 15

1. Except as otherwise directed by the inspector, all devices shown on the Erosion Control Plan shall be in place at the end of each working day. All erosion control facilities must be inspected and repaired at the end of each working day during the rainy season and maintained during the rainy season (October 1 to April 15).
2. All erosion and sediment control measures shall be constructed and maintained in accordance with the provisions of the Association of Bay Area Governments (ABAG) " Manual of Standards for Erosion and Sediment Control Measures" unless otherwise stated within these General Notes. Control measures are subject to the inspection and approval of the Engineering Division of the Community Development Department.
3. All loose soil and debris shall be removed from the street areas upon starting operations and periodically thereafter as directed by the inspector. The site shall be maintained so as to minimize sediment laden runoff to any storm drain system.
4. The Contractor shall place drain rock as a gravel roadway (6" minimum thickness for the full width and 50 feet long) at each road entrance to the site. Any mud that is tracked onto public streets shall be removed the same day as required by the City Engineer.
5. Stand–by crews shall be alerted by the Permittee or Contractor for emergency work during rainstorms.
6. After October 1, all erosion control measures, underground storm drain facilities and concrete shall be installed complete as shown on the improvements plans.
7. As a part of the erosion control measures, underground storm drain facilities and concrete shall be installed complete as shown on the improvement plans.
8. All storm drain inlet structures greater than four feet in depth shall have steps installed per the latest accepted safety standards. A 6" concrete cover slab shall be installed over pipe with less than 2.5 feet of cover to subgrade. All pipe to be Class III unless otherwise noted.
9. All graded areas, including, but not limited to, cut and fill slopes, streets, parking areas, and building pads shall be hydroseeded per ABAG. In addition to hydroseeding, application of straw waith a tackifier or mulch may be required by the City Engineer.
10. To minimize erosion of graded banks, all graded banks steeper than 2% and higher than 3 feet, shall be hydroseeded, landscape, or sealed. In addition to hydroseeding, application of straw with a tackifier or mulch may be required by the City Engineer. If the permanent storm drain system is not installed by October 1, temporary ditches shall be constructed to contain the storm water and direct it, in a manner that avoids erosion of the banks, to the erosion and sediment control facilities.
11. Borrow areas and temporary stockpiles shall be protected with appropriate erosion control measures to the satisfaction of the City Engineer.
12. Sandbags or straw bales shall be stockpiled on site and placed at intervals shown on erosion control plans, when the rain forecast is 40% or greater, or when directed by the inspector.
13. Sandbags referred to in the preceding items must be full. Approved sandbag materials are sand, decomposed granite and/or gravel, or other materials approved by the inspector.
14. All open utility trenches shall be blocked at the prescribed intervals from the bottom to top with a double row of sandbags prior to backfill. Sewer trenches shall be blocked at the prescribed intervals with a double row of sandbags extending downward, two sandbags from the graded surface of the street. Sandbags are to be placed with alternate header and stretcher courses. The intervals prescribed between sandbag locking shall depend on the slope of the ground surface, but not exceed the following :

Grade of the Street	Interval
Less than 2%	As required
2% to 4%	100 feet
4% to 105	50 feet
Over 6%	25 feet

15. After storm drain, sanitary sewer and utility trenches are backfilled and compacted, the surfaces over such trenches shall be mounded slightly to prevent channeling of water in the trench area. Care should be exercise to provide for cross flow at frequent intervals where trenches are not on the center line of a crowned street.
16. This plan may not cover all the situations that arise during construction due to unanticipated field conditions. Variations may be made to these plans in the field, subject to approval of the City Engineer.
17. Erosion control structures shall be adjusted by the Contractor to reflect all changes in drainage as streets and building – Pads are being installed.
18. Temporary erosion control devises shown on the grading plan with interfere with the work shall be relocated or modified as and when the work inspector so directs as the work progresses.
19. Temporary erosion control devises shown on the grading plan with interfere with the work shall be relocated or modified as and when the work inspector so directs as the work progresses.
20. All basins shall have all debris and silt removed within 24 hours after each storm
21. Standard details are taken from "ABAG manual of standards for erosion & sediment control measure" second edition may 1995.
22. The contractor shall be responsible for bringing the construction activities for this project into compliance with the requirements of the "State water resources control board general permit" to discharge storm water associated with construction activity, and the "national pollutant discharge elimination (N.P.D.E.S.) Permit." As a guideline, the contractor shall refer to the project erosion control plan.

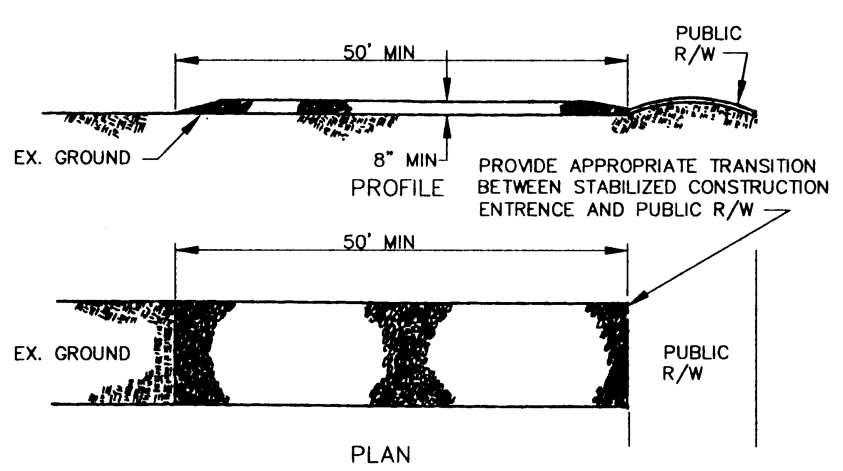

Temporary Stabilized Construction Entrance

Design and Construction Specifications

1. The material for construction of the pad shall be 2 to 3 inch (5–8 cm) stone.
2. The thickness of the pad shall not be less than 8 inches (20 cm).
3. The width of the pad shall not be less than the fill width of all points of ingress or egress.
4. The length of the pad shall be as required, but not less than 50 feet (15 m).
5. The entrance shall be maintained in a condition that will prevent tracking of flowing of sediment onto public right of way. This may require periodic top dressing with additional stone as conditions demand, and repair and/or cleanout of any measures used to trap sediment. All sediment spilled, dropped, washed, or tracked onto public right of way shall removed immediately.
6. When necessary, wheels shall be cleaned to remove sediment prior to entrance into public rights of way. When washing is required, it shall be done on an area stabilized with crushed stone which drains into an approved sediment trap or sediment basin. All sediment shall be prevented from entering any storm drain, ditch, or watercourse through use of sand bags, gravel, boards, or other approved methods.

GRADING/EROSION CONTROL:

1. ALL GRADING SHALL BE DONE IN ACCORDANCE WITH THE REQUIREMENTS OF THE CITY OF NEWARK STANDARDS AND SPECIFICATIONS, THE CALIFORNIA DEPARTMENT OF TRANSPORTATION STANDARD SPECIFICATIONS (JULY, 1992) AND THE PROJECT SOILS REPORT.

2. ALL SITE PREPARATION AND GRADING SHALL CONFORM TO THE GEOTECHNICAL INVESTIGATION PREPARED BY GEI, INC., PROJECT NO. 21186B ENTITLED,"REPORT-SOIL INVESTIGATION , PROPOSED WAREHOUSE ADDITION, BK MILLS FIXTURE, 37523 SYCAMORE STREET, NEWARK,CA" DATED MAY 4, 1998.

3. ALL INDEPENDENT LABORATORY INSPECTION AND TESTING REQUIRED BY THE CITY OF NEWARK SHALL BE PAID FOR BY THE CONTRACTOR.

4. ALL EXPOSED SURFACES SHALL BE WATERED AS DEEMED NECESSARY.

5. DUST PALLIATIVES MAY BE SUBSTITUTED FOR WATERING UPON THE APPROVAL OF THE ENGINEER. DUST PALLIATIVES SHALL BE APPLIED AS PROVIDED IN SECTION 18 OF CAL-TRANS SPECIFICATIONS.

6. CONTRACTOR SHALL IMPORT AND/OR EXPORT SOIL MATERIALS AS NECESSARY TO ESTABLISH GRADES SHOWN ON PLAN.

7. ALL GRADING SHALL BE DONE IN ACCORDANCE WITH THE STORM WATER POLLUTION PREVENTION PLAN ON FILE WITH THE CITY OF NEWARK.

SITE PREPARATION:

1. SITE PREPARATION SHALL CONSIST OF SITE CLEARING AND GRUBBING AND THE PREPARATIONS OF FOUNDATION MATERIALS FOR RECEIVING FILL.

CLEARING & GRUBBING:

1. THE CONTRACTOR SHALL ACCEPT THE SITE IN THIS PRESENT CONDITION AND SHALL DEMOLISH AND/OR REMOVE FROM THE AREA OF DESIGNATED PROJECT, EARTHWORK, ALL STRUCTURES, BOTH SURFACE AND SUBSURFACE, TREES, BRUSH, ROOTS, DEBRIS, ORGANIC MATTER, AND ALL OTHER MATTER DETERMINED BY THE SOILS ENGINEER TO BE DELETERIOUS. SUCH MATERIALS SHALL BECOME THE PROPERTY OF THE CONTRACTOR AND SHALL BE REMOVED FROM THE SITE.

2. GENERAL SITE CLEARING SHOULD INCLUDE REMOVAL OF VEGETATION, EXISTING UTILITIES, STRUCTURES INCLUDING FOUNDATIONS, BASEMENT WALLS AND FLOORS, EXISTING STOCKPILED SOIL, TREES AND ASSOCIATED ROOT SYSTEMS, RUBBLE, RUBBISH AND ANY LOOSE AND/OR SATURATED MATERIALS. SITE STRIPPING SHOULD EXTEND TO A MINIMUM DEPTH OF TWO TO FOUR INCHES, OR UNTIL ALL ORGANICS IN EXCESS OF 3 PERCENT BY VOLUME ARE REMOVED. DEEPER STRIPPING MAY BE REQUIRED IN LOCALIZED AREAS. THESE MATERIALS WILL NOT BE SUITABLE FOR USE AS ENGINEERED FILL. HOWEVER, STRIPPED TOPSOIL MAY BE STOCKPILED AND REUSED IN LANDSCAPE OR NON-STRUCTURAL

FILL & BACKFILL MATERIAL:

1. ALL MATERIALS UTILIZED FOR CONSTRUCTION SITE FILLS SHALL BE FREE FROM VEGETABLE OR OTHER DELETERIOUS MATTER AS DETERMINED BY THE SOILS ENGINEER.

PLACEMENT, SPREADING & COMPACTING:

1. THE PLACEMENT AND SPREADING OF APPROVED FILL MATERIALS AND THE PROCESSING AND COMPACTING OF APPROVED FILL AND NATIVE MATERIALS SHALL BE THE RESPONSIBILITY OF THE CONTRACTOR. HOWEVER, COMPACTING OF FILL MATERIALS BY FLOODING, PONDING, OR JETTING SHALL NOT BE PERMITTED UNLESS SPECIFICALLY APPROVED BY LOCAL CODE, AS WELL AS THE SOILS ENGINEER.

SEASONAL LIMITS:

1. NO FILL MATERIAL SHALL BR PLACED, SPREAD, OR ROLLED WHILE IT IS FROZEN OR THAWING OR DURING UNFAVORABLE WET WEATHER CONDITIONS. WHEN THE WORK IS INTERRUPTED BY HEAVY RAINS, FILL OPERATIONS SHALL NOT BE RESUMED

Construction Road Stabilization

Construction Specifications

Temporary surfaces

A minimum 6–inch (15 cm) course of permeable material shall be applied before the rainy season. This rock base should have a Durability Index of at least 40, consist of not less than 90 percent by weight of clean crushed particles as determined by California Text 205, and conform to the chart below:

Typical Specifications, CalTrans Class 3 Permeable Materal

Sleve Size		Percent Passing
1.5"	(3.8 cm)	100
1"	(2.5 cm)	90–100
0.75"	(1.3 cm)	40–100
0.375"	(0.6 cm)	0–50
No. 4		1–15
No. 8		0–15

Source: CalTrans (Ref. No. 1)

One–and–a–half inch crushed rock (3.8 cm) is recommend. On heavily traveled areas, the crushed rock shall be placed to an 8 to 10 inch depth (20–25 cm) to avoid excessive dissipation or maintenance needs. For steeper slopes, either the rock size or the depth of the bed shall be increased. For additional stability, if needed, filter fabric may be applied to the roadbed, conforming to section 88–1.03 of CalTrans Standard Specifications.

Maintenance

1. Roads and parking areas shall be checked for wear; periodic top dressing of new gravel may be required.
2. Adjacent seeded areas shall be checked occasionally for adequate vegetative growth.
3. Drainage structures associated with roads and parking areas shall be checked regularly to ensure that they do not become clogged or impeded.

CONSTRUCTION ENTRANCE & ROAD DETAILS & NOTES (1)

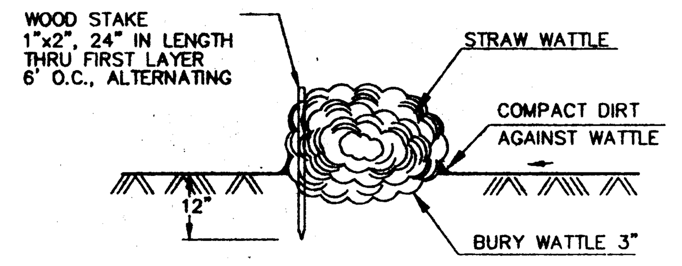

STRAW WATTLE DETAIL (2)

(N.T.S)

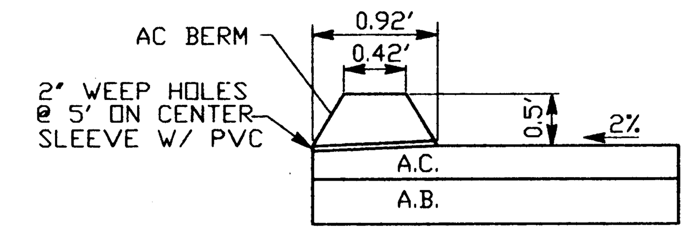

ASPHALT BERM (3)

(N.T.S)

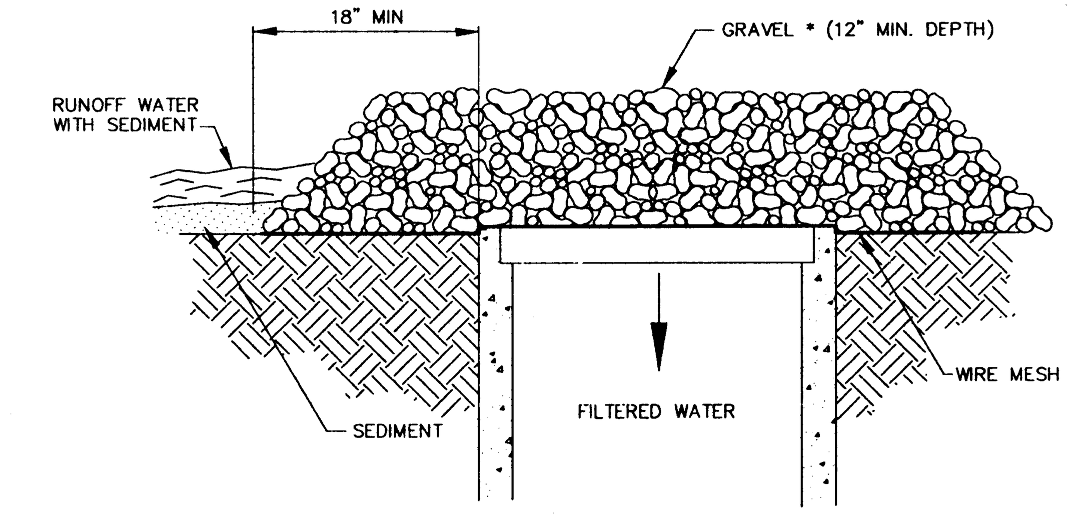

* GRAVEL SHOULD BE CLASS 3 PREMEABLE METERIAL. GRAVEL CAN BE REPLACED BY ROCK FILLED BURLAP SACKS.

INLET PROTECTION (4)

(N.T.S)

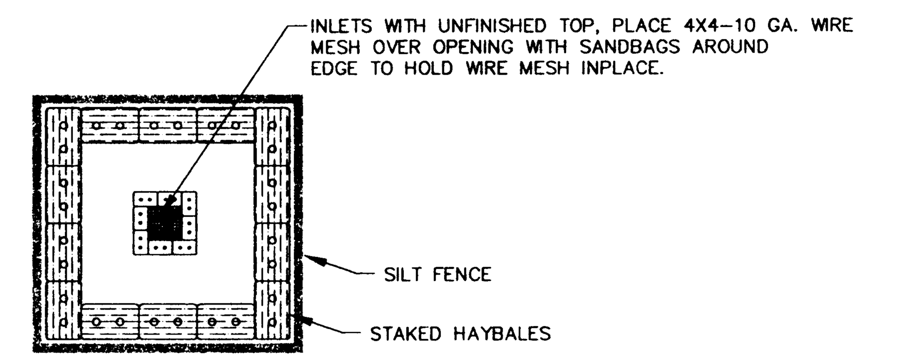

Construction Specifications
Inlet filtering using silt fence & haybails may be used where concentrated flows are expected, and overflow capacity is necessary to prevent excessive ponding around the structure.

ponding may occur, especially without regular maintance. This devise should not be used under circumstances where overflow may endanger an exposed fill slope. If ponding does occur, be aware of its possible effects on adjacent property, buildings, work space, to traffic movement.

On steep slopes runoff may bypass protected inlets and increase the flow to succeeding inlets. Overflow to an inlet which is at a low point in a street may also occur. Capacity of this devise can increase if the degree of filtration increases.

For filters using wire mesh & sand bags

For drop inlet, the mesh shall be laid over the unfinished drop inlet so that the wire extends beyond each side of the structure by a minimum of one foot. If more than one strip of mesh is used, the strip shall be overlapped. Sand bags shall be used on all sides to secure the wire mesh. A row of hay bails shall then be staked around the perimeter of the structure followed by a row of silt fencing.

Maintenance

If the effectiveness of the filter is reduced due to sediment buildup, the sediment shall be pulled away from the silt fencing or cleaned out of the area between hay bails & sand bags. Wire mesh shall be checked & repaired as necessary.

INLET PROTECTION (5)

(N.T.S)

HKA
Harlan Krusemark - Architect
4415 Cowell Road, Suite 230
Concord, CA 94521
Tel: 925.681.1905
Fax: 925.681.1906

LICENSED ARCHITECT HARLAN KRUSEMARK No. C23833 Exp. 9/30/01 STATE OF CALIFORNIA

MILANI & Associates
3480 Buskirk Avenue, Suite 225
Pleasant Hill, CA 94523
Tel: 925.941.1490
Fax: 925.941.1496

LICENSED CIVIL ENGINEER MARY GRACE HOU... 50209 Expires: 6-30-01 STATE OF CALIFORNIA

Revisions	Date
△	
△	
△	
△	
△	
△	

HAWKINS SCHOOL (INCREMENTS #1 & #2)

475 Darlene Lane
Tracy, CA 95377

Jefferson School District
7500 West Linne Road
Tracy, CA 95304

DSA FILE NO. 39-39
IDENTIFICATION STAMP
DIVISION OF THE STATE ARCHITECT
APPL 02 -102225
AC FLS SS
DATE

Sheet Title:
EROSION CONTROL DETAILS & NOTES

Printing Date / Purpose:
-

Scale: As Noted
Project Number: 9903.00
Sheet Number:

C0.3

of Sheets

FILE:

COPYRIGHT © 2000 HARLAN KRUSEMARK - ARCHITECT (HKA) THESE DRAWINGS ARE PROPRIETARY DOCUMENTS OF HKA AND ARE NOT TO BE DISTRIBUTED, PUBLISHED OR REPRODUCED WITHOUT WRITTEN PERMISSION OF HKA.

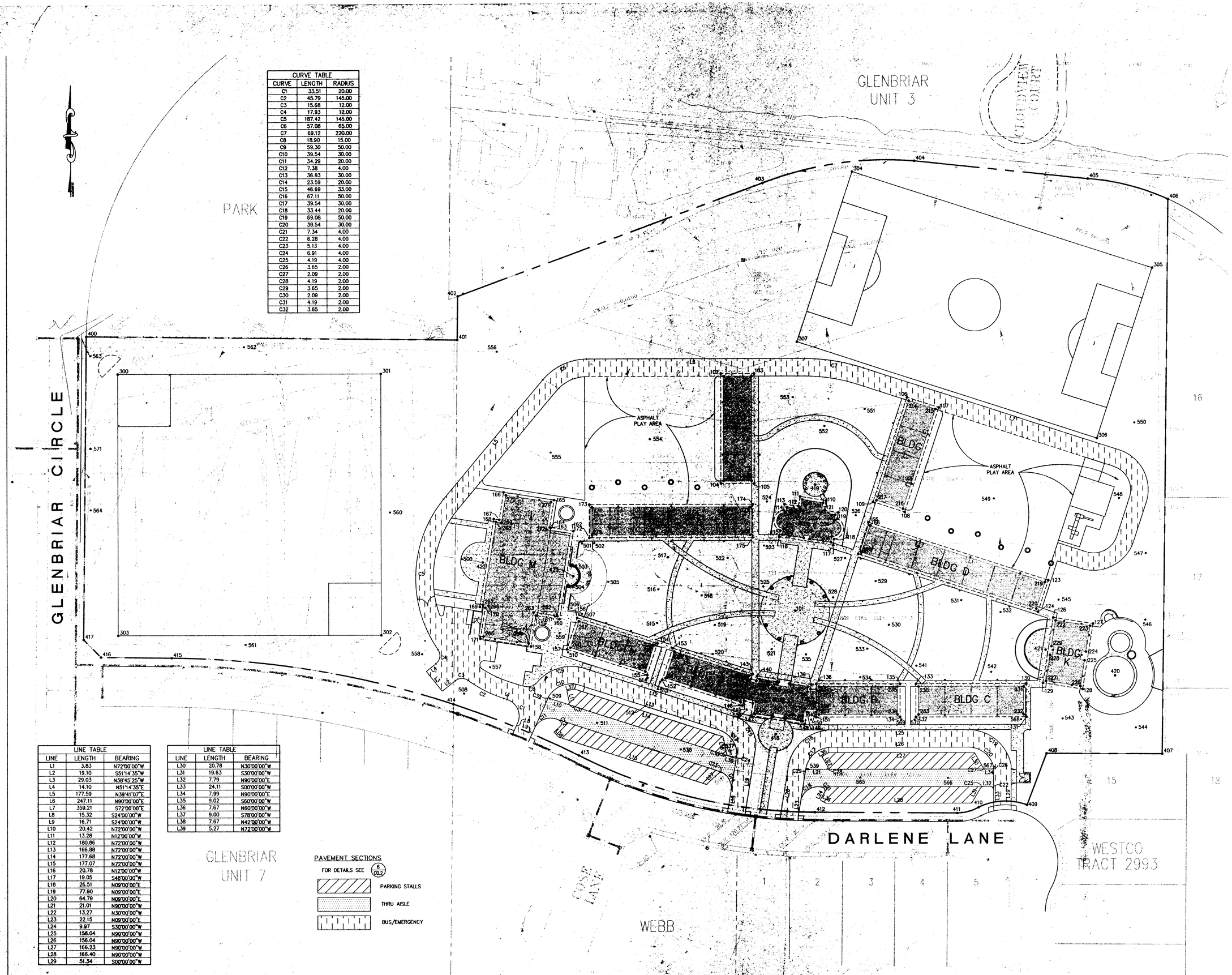

CURVE TABLE		
CURVE	LENGTH	RADIUS
C1	33.51	20.00
C2	45.79	145.00
C3	15.68	12.00
C4	17.93	12.00
C5	187.42	145.00
C6	57.08	65.00
C7	69.12	220.00
C8	18.90	15.00
C9	59.30	50.00
C10	39.54	30.00
C11	34.29	20.00
C12	7.38	4.00
C13	36.93	30.00
C14	23.59	20.00
C15	46.69	33.00
C16	67.11	50.00
C17	39.54	30.00
C18	33.44	20.00
C19	69.08	50.00
C20	39.54	30.00
C21	7.34	4.00
C22	6.28	4.00
C23	5.13	4.00
C24	6.91	4.00
C25	4.19	4.00
C26	3.65	2.00
C27	2.09	2.00
C28	4.19	2.00
C29	3.65	2.00
C30	2.09	2.00
C31	4.19	2.00
C32	3.65	2.00

LINE TABLE		
LINE	LENGTH	BEARING
L1	3.83	N72°00'00"W
L2	19.10	S51°14'35"W
L3	29.03	N38°45'25"W
L4	14.10	N51°14'35"E
L5	177.59	N39°41'07"E
L6	247.11	N90°00'00"E
L7	359.21	S72°00'00"E
L8	15.32	S24°00'00"W
L9	16.71	S24°00'00"W
L10	20.42	N72°00'00"W
L11	13.28	N12°00'00"W
L12	180.86	N72°00'00"W
L13	166.88	N72°00'00"W
L14	177.68	N72°00'00"W
L15	177.07	N72°00'00"W
L16	20.78	N12°00'00"W
L17	19.05	S48°00'00"W
L18	26.51	N09°00'00"E
L19	77.90	N09°00'00"E
L20	64.79	N09°00'00"E
L21	21.01	N90°00'00"W
L22	13.27	N30°00'00"W
L23	22.15	N09°00'00"E
L24	9.97	S30°00'00"W
L25	156.04	N90°00'00"W
L26	156.04	N90°00'00"W
L27	166.23	N90°00'00"W
L28	166.40	N90°00'00"W
L29	51.34	S00°00'00"W

LINE TABLE		
LINE	LENGTH	BEARING
L30	20.78	N30°00'00"W
L31	19.63	S30°00'00"W
L32	7.79	N90°00'00"E
L33	24.11	S00°00'00"W
L34	7.99	N90°00'00"E
L35	9.02	S60°00'00"W
L36	7.67	N60°00'00"W
L37	9.00	S78°00'00"W
L38	7.67	N42°00'00"W
L39	5.27	N72°00'00"W

PAVEMENT SECTIONS

FOR DETAILS SEE 6/00.2

PARKING STALLS

THRU AISLE

BUS/EMERGENCY

HKA

Harlan Krusemark - Architect
4415 Cowell Road, Suite 230
Concord, CA 94521
Tel: 925.681.1905
Fax: 925.681.1906

LICENSED ARCHITECT HARLAN KRUSEMARK No. 12803 Exp. 5/30/10 STATE OF CALIFORNIA

& Associates
MILANI

3480 Buskirk Avenue, Suite 225
Pleasant Hill, CA 94523
Tel: 925.941.1490
Fax: 925.941.1496

LICENSED CIVIL ENGINEER MARY GRACE MILANI 50309 6-30-01 STATE OF CALIFORNIA

Revisions	Date

HAWKINS SCHOOL
(INCREMENTS #1 & #2)

475 Darlene Lane
Tracy, CA 95377

Jefferson School District
7500 West Linne Road
Tracy, CA 95304

DSA FILE NO. 39-39
IDENTIFICATION STAMP
DIVISION OF THE STATE ARCHITECT
APPL 02 -102225
AC. PLS. SS.
DATE AUG 2 4 2006

Sheet Title:

HORIZONTAL CONTROL PLAN

Printing Date / Purpose:
-

Scale: 1"=40'
Project Number: 9903.00
Sheet Number:

C1.0

of Sheets

FILE:

COPYRIGHT © 2000 HARLAN KRUSEMARK - ARCHITECT (HKA) THESE DRAWINGS ARE PROPRIETARY DOCUMENTS OF HKA AND ARE NOT TO BE DISTRIBUTED, PUBLISHED OR REPRODUCED WITHOUT WRITTEN PERMISSION OF HKA.

POINT	NORTHING	EASTING	TYPE
101	682.351	1184.175	CONTROL
102	954.36	1099.921	PAD
103	954.36	1137.921	PAD
104	828.36	1099.921	PAD
105	828.36	1137.921	PAD
106	926.753	1312.221	PAD
107	915.011	1348.361	PAD
108	795.177	1309.425	PAD
109	806.92	1273.285	PAD
110	808.494	1219.341	PAD
111	813.187	1189.711	PAD
112	801.993	1187.938	PAD
113	804.496	1172.135	PAD
114	797.452	1171.019	PAD
115	774.007	1167.306	PAD
116	766.964	1166.19	PAD
117	757.265	1227.427	PAD
118	764.308	1228.543	PAD
119	787.753	1232.256	PAD
120	794.797	1233.372	PAD
121	797.3	1217.569	PAD
122	783.477	1267.771	PAD
123	716.729	1473.199	PAD
124	680.589	1461.456	PAD
125	747.336	1256.028	PAD
126	674.157	1478.824	PAD
127	666.961	1524.258	PAD
128	591.896	1512.369	PAD
129	599.092	1466.935	PAD
130	598.342	1447.876	PAD
131	560.342	1447.876	PAD
132	560.342	1321.876	PAD
133	598.342	1321.876	PAD
134	560.342	1303.876	PAD
135	598.342	1303.876	PAD
136	598.342	1207.876	PAD
137	592.342	1207.876	PAD
138	592.342	1201.306	PAD
139	597.762	1202.164	PAD
140	607.461	1140.927	PAD
141	602.041	1140.069	PAD
142	604.072	1133.82	PAD
143	609.778	1135.674	PAD
144	576.041	1135.951	PAD
145	579.344	1125.786	PAD
146	573.638	1123.932	PAD
147	562.027	1133.731	PAD
148	552.328	1194.968	PAD
149	566.345	1197.188	PAD
150	566.345	1207.876	PAD
151	560.342	1207.876	PAD
152	603.303	1032.63	PAD
153	639.443	1044.373	PAD
154	645.006	1027.254	PAD
155	608.866	1015.511	PAD
156	674.671	935.953	PAD
157	638.531	924.21	PAD
158	641.943	883.159	PAD
159	677.499	888.791	PAD
160	673.224	915.788	PAD
161	677.29	890.115	PAD
162	773.968	931.744	PAD
163	778.034	906.071	PAD
164	778.244	904.747	PAD
165	809.85	909.753	PAD
166	818.923	852.467	PAD
167	787.317	847.461	PAD
168	788.308	841.206	PAD
169	687.563	825.25	PAD
170	686.573	831.505	PAD
171	651.016	825.874	PAD
172	766.36	949.921	PAD
173	804.36	949.921	PAD
174	804.36	1135.921	PAD
175	766.36	1135.921	PAD

POINT	NORTHING	EASTING	TYPE
200	809.754	1192.205	BLDG
201	806	1215.909	BLDG
202	794.807	1214.137	BLDG
203	792.303	1229.939	BLDG
204	785.712	1228.895	BLDG
205	767.29	1225.978	BLDG
206	760.698	1224.934	BLDG
207	764.556	1200.57	BLDG
208	765.6	1193.986	BLDG
209	769.459	1169.623	BLDG
210	776.049	1170.667	BLDG
211	794.472	1173.585	BLDG
212	801.065	1174.629	BLDG
213	798.56	1190.432	BLDG
214	922.975	1314.147	BLDG
215	913.086	1344.581	BLDG
216	798.958	1307.499	BLDG
217	808.848	1277.065	BLDG
218	779.696	1269.697	BLDG
219	714.803	1469.419	BLDG
220	684.369	1459.53	BLDG
221	749.263	1259.808	BLDG
222	670.724	1481.318	BLDG
223	664.467	1520.826	BLDG
224	634.838	1516.133	BLDG
225	624.959	1514.568	BLDG
226	595.329	1509.875	BLDG
227	601.586	1470.368	BLDG
228	631.218	1475.061	BLDG
229	641.095	1476.626	BLDG
230	595.342	1324.876	BLDG
231	595.342	1444.876	BLDG
232	563.342	1444.876	BLDG
233	563.342	1324.876	BLDG
234	595.342	1210.876	BLDG
235	595.342	1300.876	BLDG
236	563.342	1300.876	BLDG
237	563.342	1210.876	BLDG
238	569.345	1210.625	BLDG
239	569.345	1194.626	BLDG
240	555.761	1192.473	BLDG
241	559.202	1170.745	BLDG
242	561.08	1158.892	BLDG
243	564.521	1137.164	BLDG
244	578.103	1139.314	BLDG
245	583.043	1124.11	BLDG
246	577.418	1122.006	BLDG
247	605.231	1036.411	BLDG
248	635.663	1046.299	BLDG
249	607.852	1131.894	BLDG
250	602.064	1130.29	BLDG
251	598.103	1142.483	BLDG
252	604.029	1143.421	BLDG
253	600.587	1165.15	BLDG
254	598.71	1177.003	BLDG
255	595.268	1198.732	BLDG
256	589.342	1197.793	BLDG
257	589.342	1210.625	BLDG
258	643.08	1023.474	BLDG
259	612.646	1013.585	BLDG
260	640.457	927.99	BLDG
261	670.891	937.879	BLDG
262	676.656	913.294	BLDG
263	680.932	886.298	BLDG
264	645.375	880.666	BLDG
265	653.51	829.306	BLDG
266	689.066	834.938	BLDG
267	690.057	828.682	BLDG
268	784.875	843.7	BLDG
269	783.885	849.955	BLDG
270	815.49	854.961	BLDG
271	807.356	906.321	BLDG
272	775.75	901.315	BLDG
276	801.36	952.922	BLDG
277	801.36	1132.921	BLDG
278	769.36	1132.921	BLDG
279	769.36	952.921	BLDG
280	831.361	1102.922	BLDG
281	951.36	1102.921	BLDG
282	951.36	1134.921	BLDG
283	831.36	1134.921	BLDG

POINT	NORTHING	EASTING	TYPE
300	955.189	412.809	BALLFIELD
301	955.189	712.809	BALLFIELD
302	655.189	712.809	BALLFIELD
303	655.189	412.809	BALLFIELD
304	1185.65	1249.916	BALLFIELD
305	1074.404	1592.297	BALLFIELD
306	879.437	1528.948	BALLFIELD
307	990.683	1186.568	BALLFIELD
400	998.387	377.086	PL
401	993.748	800.079	PL
402	1043.747	800.672	PL
403	1172.697	1148.029	PL
404	1197.889	1320.93	PL
405	1176.777	1519.321	PL
406	1152.902	1610.58	PL
407	517.555	1602.882	PL
408	518.412	1471.02	PL
409	459.55	1448.715	PL
410	456.999	1393.274	PL
411	450.445	1368.991	PL
412	451.493	1206.358	PL
413	516.846	937.725	PL
414	575.95	795.125	PL
415	629.43	473.633	PL
416	630.311	393.046	PL
417	650.529	373.266	PL
418	540.857	1161.765	CONTROL
419	826.823	1207.058	CONTROL
420	607.46	1549.24	CONTROL
421	637.104	1469.997	CONTROL
422	738.45	828.585	CONTROL
423	722.359	931.585	CONTROL
500	742.254	804.665	CATCH BASIN
501	759.876	941.605	CATCH BASIN
502	760.377	955.588	CATCH BASIN
503	734.751	934.754	CATCH BASIN
504	709.595	930.772	CATCH BASIN
505	715.953	971.396	CATCH BASIN
506	685.795	929.381	CATCH BASIN
507	679.245	941.247	CATCH BASIN
508	588.24	807.097	CATCH BASIN
509	582.108	904.733	CATCH BASIN
510	635.135	925.472	CATCH BASIN
511	554.239	958.375	CATCH BASIN
512	573.101	1013.355	CATCH BASIN
513	601.065	1030.326	CATCH BASIN
514	605.701	1016.06	CATCH BASIN
515	668.548	1026.939	CATCH BASIN
516	707.096	1028.23	CATCH BASIN
517	743.797	1038.869	CATCH BASIN
518	700.03	1077.46	CATCH BASIN
519	666.084	1092.562	CATCH BASIN
520	632.667	1090.019	CATCH BASIN
521	638.206	1157.19	CATCH BASIN
522	742.86	1107.303	CATCH BASIN
523	757.052	1148.673	CATCH BASIN
524	807.547	1152.175	CATCH BASIN
525	710.072	1147.922	CATCH BASIN
526	791.531	1253.298	CATCH BASIN
527	742.425	1241.024	CATCH BASIN
528	697.512	1227.221	CATCH BASIN
529	716.143	1275.984	CATCH BASIN
530	666.132	1291.195	CATCH BASIN
531	694.15	1373.606	CATCH BASIN
532	680.342	1418.531	CATCH BASIN
533	638.57	1266.279	CATCH BASIN
534	606.003	1258.37	CATCH BASIN
535	632.028	1196.199	CATCH BASIN
536	569.107	1128.683	CATCH BASIN
537	514.624	1112.428	CATCH BASIN
538	523.337	1053.481	CATCH BASIN
539	500.662	1198.239	CATCH BASIN
540	557.502	1201.957	CATCH BASIN
541	619.077	1322.427	CATCH BASIN
542	611.844	1407.749	CATCH BASIN
543	558.293	1489.411	CATCH BASIN
544	547.751	1572.879	CATCH BASIN
545	694.383	1484.864	CATCH BASIN
546	671.232	1583.799	CATCH BASIN
547	747.455	1584.438	CATCH BASIN
548	810.455	1553.994	CATCH BASIN
549	810.459	1411.077	CATCH BASIN
550	897.181	1571.797	CATCH BASIN
551	913.345	1263.687	CATCH BASIN
552	893.901	1217.673	CATCH BASIN
553	927.004	1181.684	CATCH BASIN
554	879.36	1018.922	CATCH BASIN
555	864.317	906.023	CATCH BASIN
556	980.198	844.988	CATCH BASIN
557	618.349	836.736	CATCH BASIN
558	633.364	759.348	CATCH BASIN
559	657.341	915.725	CATCH BASIN
560	795.971	723.062	CATCH BASIN
561	644.513	557.949	CATCH BASIN
562	985.997	556.637	CATCH BASIN
563	975.968	381.524	CATCH BASIN
564	799.151	381.562	CATCH BASIN
565	491.157	1258.137	CATCH BASIN
566	490.508	1358.137	CATCH BASIN
567	503.154	1411.185	CATCH BASIN
568	557.502	1441.875	CATCH BASIN
569	557.502	1305.375	CATCH BASIN
570	557.502	1320.375	CATCH BASIN
571	869.742	381.547	MANHOLE

HKA

Harlan Krusemark - Architect
4415 Cowell Road, Suite 230
Concord, CA 94521
Tel: 925.681.1905
Fax: 925.681.1906

& Associates
MILANI

3480 Buskirk Avenue, Suite 225
Pleasant Hill, CA 94523
Tel: 925.941.1490
Fax: 925.941.1496

Revisions Date

HAWKINS SCHOOL
(INCREMENTS #1 & #2)

475 Darlene Lane
Tracy, CA 95377

Jefferson School District
7500 West Linne Road
Tracy, CA 95304

DSA FILE NO. 39-39
IDENTIFICATION STAMP
DIVISION OF THE STATE ARCHITECT
APPL 02 -102225
AC___ FLS_____ SS_____
DATE

Sheet Title:

HORIZONTAL
CONTROL PLAN
POINT CONTROL

Printing Date / Purpose:

Scale: NONE
Project Number: 9903.00
Sheet Number:

C1.1

of Sheets

FILE:

COPYRIGHT © 2000 HARLAN KRUSEMARK - ARCHITECT (HKA) THESE DRAWINGS ARE PROPRIETARY DOCUMENTS OF HKA AND ARE NOT TO BE DISTRIBUTED, PUBLISHED OR REPRODUCED WITHOUT WRITTEN PERMISSION OF HKA.

PLANT MATERIAL KEY AND SCHEDULE OF SIZES:

SYMBOL	BOTANIC NAME	COMMON NAME	CONT	HT	SPD	
TREES:						
ACE RUB	ACER RUBRUM 'RED SUNSET'	RED MAPLE	15 GAL	7-8'	2-3'	
ALN COR	ALNUS CORDATA	ITALIAN ALDER	15 GAL	7-8'	2-3'	
CEL SIN	CELTIS SINENSIS	CHINESE HACKBERRY	15 GAL	7-8'	2-3'	
CER OCC	CERCIS OCCIDENTALIS	WESTERN REDBUD	24"BOX	9-11'	4-5'	MULTI
FRA RAY	FRAXINUS OXYCARPA RAYWOOD	RAYWOOD ASH	15 GAL	7-8'	2-3'	
LAG TUS	LAGERSTROEMIA X 'FAURIEI' TUSCARORA	RED CRAPE MYRTLE	24"BOX	9-10'	3-4'	
OLE SWA	OLEA EUROPAEA 'SWAN HILL'	FRUITLESS OLIVE	24"BOX	6-7'	4-5'	
PIN CAN	PINUS CANARIENSIS	CANARY ISLAND PINE	15 GAL	6-7'	2-3'	
PLA COL	PLATANUS ACERIFOLIA 'COLUMBIA'	SYCAMORE	15 GAL	7-9'	2-3'	
PYR CAL	PYRUS CALLERYANA 'CHANTICLEER'	FLOWERING PEAR	15 GAL	7-8'	2-3'	
QUE RUB	QUERCUS RUBRA	RED OAK	15 GAL	7-8'	5-6'	
ULM TRU	ULMUS PARVIFOLIA 'TRUE GREEN'	CHINESE EVERGREEN ELM	15 GAL	7-8'	3-4'	
WAS ROB	WASHINGTONIA ROBUSTA	MEXICAN FAN PALM	24"BOX	9-11'	3-4'	
SHRUBS:						
CST SUN	CISTUS 'SUNSET'	SUNSET ROCKROSE	1 GAL	FULL/BUSHY		
DIE BIC	DIETES BICOLOR	YELLOW FORTNIGHT LILY	1 GAL	FULL/BUSHY		
ERI KAR	ERIGERON KARVINSKIANUS	FLEABANE	1 GAL	18"		
GRE NOE	GREVILLEA 'NOELLI'	GREVILLEA	1 GAL	FULL/BUSHY		
HEL SEM	HELICTOTRICHON SEMPERVIRENS	BLUE OAT GRASS	1 GAL	FULL/BUSHY		
PEN CUP	PENNISETUM SETACEUM 'CUPREUM'	PURPLE FOUNTAIN GRASS	1 GAL	FULL/BUSHY		
PHO MAO	PHORMIUM 'MAORI MAIDEN'	NEW ZEALAND FLAX	1 GAL	FULL/BUSHY		
RHA BAL	RHAPHIOLEPIS I. 'BALLERINA	DWARF INDIA HAWTHORN	1 GAL	FULL/BUSHY		
RHA JAC	RHAPHIOLEPIS I. 'JACK EVANS'	INDIA HAWTHORN	1 GAL	FULL/BUSHY		
STA BYZ	STACHYS BYZANTINA	LAMBS EARS	1 GAL	1'		
TUL VIO	TULBAGHIA VIOLACEA	SOCIETY GARLIC	1 GAL	1'		
XYL CON	XYLOSMA CONGESTUM	SHINEY XYLOSMA	1 GAL	FULL/BUSHY		

GROUNDCOVERS:			
COP VER	COPROSMA 'VERDE VISTA'	COPROSMA	F.G. AT 12" O.C.
GAZ PNK	GAZANIA	PINK TRAILING GAZANIA	F.G. AT 12" O.C.
JUN CON	JUNIPERUS CONFERTA	SHORE JUNIPER	F.G. AT 12" O.C.
ROS COL	ROSMARINUS O. 'COLLINGWOOD INGRAM'	DWARF ROSEMARY	F.G. AT 12" O.C.
	TALL-TURF-TYPE FESCUE 'DURATION'	SEEDED LAWN	APPLICATION RATE: 10 LBS. PER 1000 SQ. FT. AVAILABLE THROUGH: CLYDE ROBBINS SEED CO. 1-510-785-0425

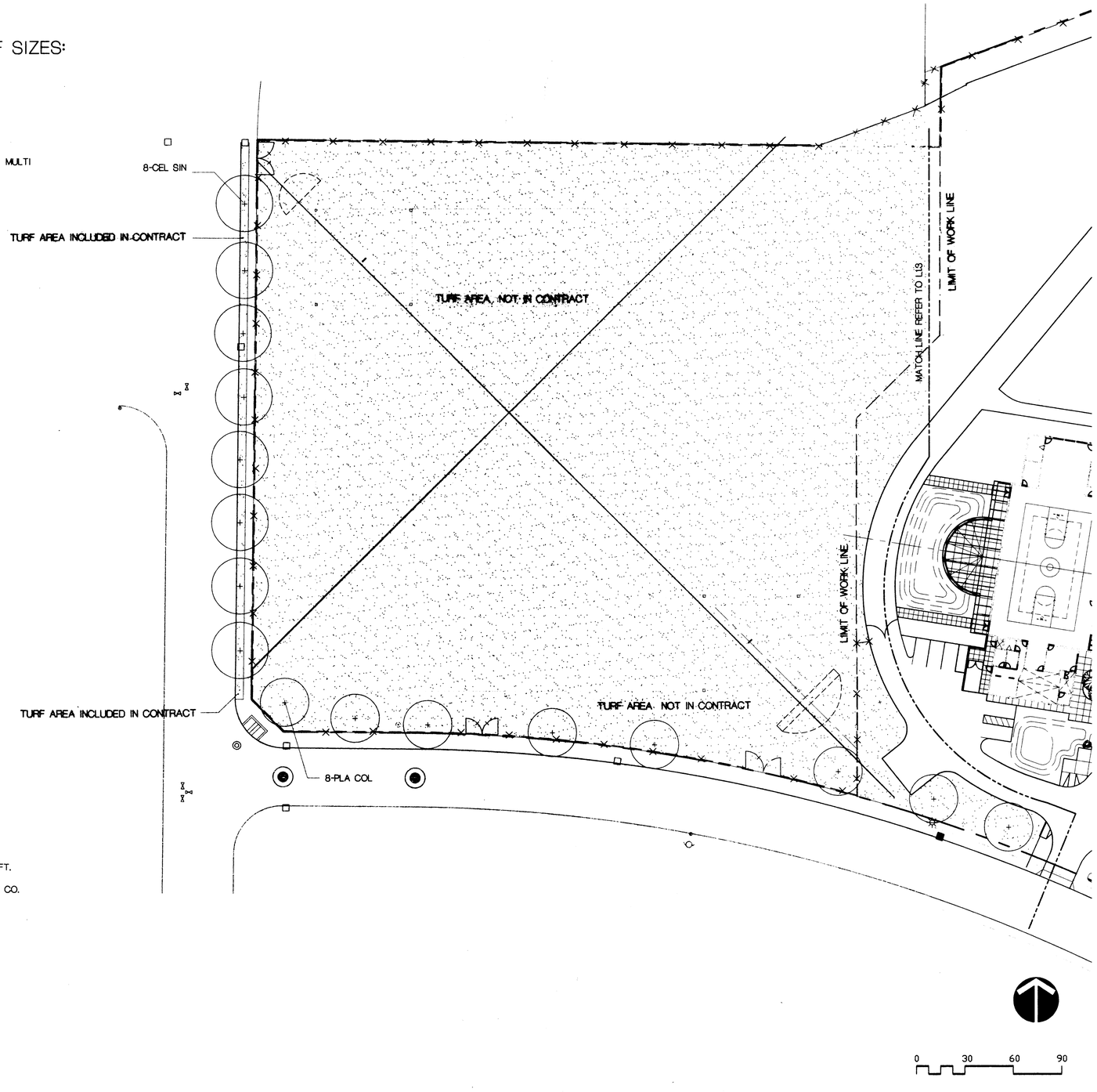

HKA
Harlan Krusemark - Architect
1330 Arnold Drive, Suite 147
Martinez, CA 94553
Tel: 925.228.9989
Fax: 925.603.7734

LICENSED ARCHITECT HARLAN KRUSEMARK No. C23833 Exp. 9/30/01 STATE OF CALIFORNIA

LICENSED LANDSCAPE ARCHITECT DONALD MITCHELL C-1061 Exp. AUG 31,2001 STATE OF CALIFORNIA

KELLER MITCHELL & CO.
Landscape Architecture
111 New Montgomery Street, Suite 303
San Francisco CA 94105
415/546-9987 Fax 415/546-9950

Revisions	Date

HAWKINS SCHOOL
(INCREMENT #1)

Darlene Lane
Tracy, CA 95376

Jefferson School District
7500 West Linne Road
Tracy, CA 95376

DSA FILE NO. 39-39
IDENTIFICATION STAMP
DIVISION OF THE STATE ARCHITECT
APPL02 _____
AC____ FLS____ SS____
DATE AUG 2 4 2000

Sheet Title:

LANDSCAPE
PLANTING PLAN
WEST

Printing Date / Purpose:
5/2/00 OSA
8/18/00
~~2/23/01~~

Scale: 1"=30'-0"
Project Number: 9903.00
Sheet Number:

L1.4 of Sheets

FILE:

COPYRIGHT © 2000 HARLAN KRUSEMARK - ARCHITECT (HKA) THESE DRAWINGS ARE PROPRIETARY DOCUMENTS OF HKA AND ARE NOT TO BE DISTRIBUTED, PUBLISHED OR REPRODUCED WITHOUT WRITTEN PERMISSION OF HKA.

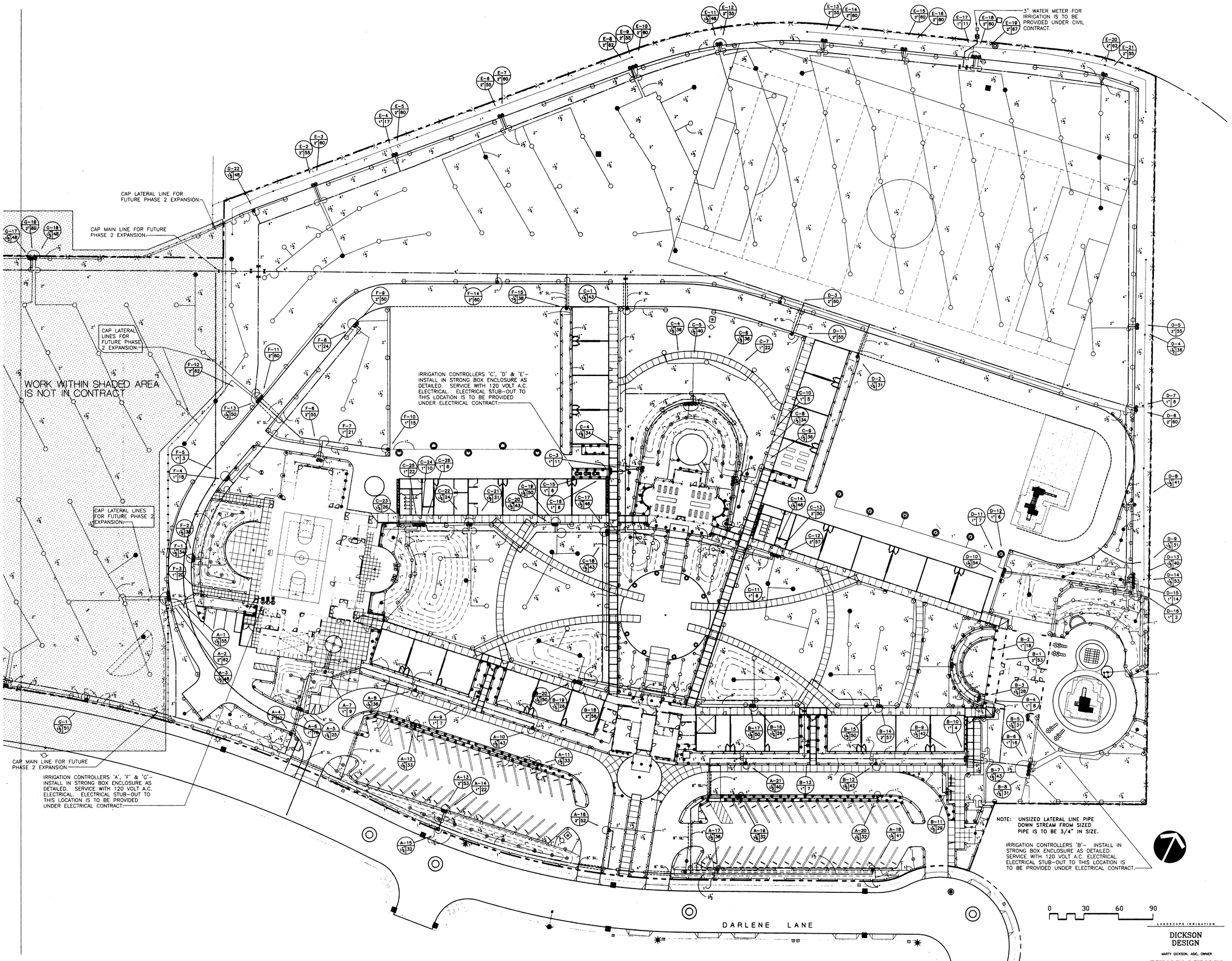

HKA

Harlan Krusemark - Architect
1330 Arnold Drive, Suite 147
Martinez, CA 94553
Tel: 925.228.9989
Fax: 925.603.7734

LICENSED ARCHITECT HARLAN KRUSEMARK No. C23833 Exp. 9/30/01 STATE OF CALIFORNIA

REGISTERED LANDSCAPE ARCHITECT JERROLD MITCHELL C-1080 Ren.Aug 31,2000 STATE OF CALIFORNIA

KELLER MITCHELL & CO.
Landscape Architecture
111 New Montgomery Street, Suite 303
San Francisco, CA 94105
415/546-9987 Fax 415/546-9950

Revisions	Date
△	
△	
△	
△	
△	
△	

HAWKINS SCHOOL
(INCREMENT #1)

Darlene Lane
Tracy, CA 95376

Jefferson School District
7500 West Linne Road
Tracy, CA 95376

DSA FILE NO. 39-39
IDENTIFICATION STAMP
DIVISION OF THE STATE ARCHITECT
APPL02 _____
AC____ FLS____ SS____
DATE _____

Sheet Title:

LANDSCAPE IRRIGATION PLAN EAST

Printing Date / Purpose:
5/2/00 OSA
8/18/00
2/23/01

Scale:
Project Number: 9903.00
Sheet Number:

L1.5 of Sheets

FILE:

LANDSCAPE IRRIGATION

DICKSON DESIGN

MARTY DICKSON, ASIC, OWNER
TEL(530) 547-5515 FAX(530) 547-5513
P.O. BOX 415
PALO CEDRO, CALIFORNIA 96073

COPYRIGHT © 2000 HARLAN KRUSEMARK - ARCHITECT (HKA) THESE DRAWINGS ARE PROPRIETARY DOCUMENTS OF HKA AND ARE NOT TO BE DISTRIBUTED, PUBLISHED OR REPRODUCED WITHOUT WRITTEN PERMISSION OF HKA.

HAWKINS SCHOOL (KMC)/A/JOB/99-806/L-IRR (HAW-L1-5)/ 1 /SCALE: 1:360 /02-20-2001 LK

IRRIGATION LEGEND

SYMBOL	MODEL NUMBER	DESCRIPTION
	I-25-36S-10	HUNTER POP-UP ROTARY SPRINKLER (LAWN)
	I-25-ADS-10	HUNTER POP-UP ROTARY SPRINKLER (LAWN)
	I-25-ADS-7	HUNTER POP-UP ROTARY SPRINKLER (LAWN)
	I-25-36S-7	HUNTER POP-UP ROTARY SPRINKLER (LAWN)
	I-25-ADS-7	HUNTER POP-UP ROTARY SPRINKLER (LAWN)
	I-25-ADS-5	HUNTER POP-UP ROTARY SPRINKLER (LAWN)
	PGM-04-A-V-1.5	HUNTER POP-UP ROTARY SPRINKLER (LAWN)
	PGM-04-A-V-1.0	HUNTER POP-UP ROTARY SPRINKLER (LAWN)
	PGM-12-A-V-3.0	HUNTER POP-UP ROTARY SPRINKLER (LAWN)
	PGM-12-A-V-3.0	HUNTER POP-UP ROTARY SPRINKLER (LAWN)
	PGM-12-A-V-2.0	HUNTER POP-UP ROTARY SPRINKLER (LAWN)
	1804-SAM-PRS-15-F,H,Q	RAINBIRD POP-UP SPRAY SPRINKLER (LAWN)
	1804-SAM-PRS-12-F,H,Q	RAINBIRD POP-UP SPRAY SPRINKLER (LAWN)
	1804-SAM-PRS-10-H,Q	RAINBIRD POP-UP SPRAY SPRINKLER (LAWN)
	1804-SAM-PRS-8-H,Q	RAINBIRD POP-UP SPRAY SPRINKLER (LAWN)
	1806-SAM-PRS-15-F,H,Q	RAINBIRD POP-UP SPRAY SPRINKLER (SHRUB)
	1806-SAM-PRS-10-F,H,Q	RAINBIRD POP-UP SPRAY SPRINKLER (SHRUB)
	1806-SAM-PRS-8-H,Q	RAINBIRD POP-UP SPRAY SPRINKLER (SHRUB)
	1806-SAM-PRS-5-H,Q	RAINBIRD POP-UP SPRAY SPRINKLER (SHRUB)
	1806-SAM-PRS-15-EST	RAINBIRD POP-UP STRIP SPRAY SPRINKLER (SHRUB)
	1806-SAM-PRS-15-SST	RAINBIRD POP-UP STRIP SPRAY SPRINKLER (SHRUB)
	1402	RAINBIRD BUBBLER (SHRUB)
	1404	RAINBIRD BUBBLER (TREE)
	DW- PRS SERIES	GRISWOLD REMOTE CONTROL VALVE W/PRESSURE REGULATOR
	33LRC	RAINBIRD QUICK COUPLING VALVE
	T-113-IRR	NIBCO GATE VALVE (LINE SIZE) (2 1/2" AND SMALLER)
	POGV-0579	NIBCO GATE VALVE (LINE SIZE) (3" & LARGER)
	975-OSY-3"	WILKINS REDUCED PRESSURE BACKFLOW ASSEMBLY
	RME-18 SENTAR	RAINMASTER CONTROLLER (IN STRONG BOX ENCLOSURE)
	RME-24 SENTAR	RAINMASTER CONTROLLER (IN STRONG BOX ENCLOSURE)
	RME-30 SENTAR	RAINMASTER CONTROLLER (IN STRONG BOX ENCLOSURE)
	RAIN GUARD	W.C.S. RAIN SWITCH WITH OVERRIDE SWITCH
		CONTROLLER & STATION NUMBER
		APPROXIMATE FLOW (GPM)
		REMOTE CONTROL VALVE SIZE
		MAIN LINE: 2 1/2" & SMALLER: 1120-SCHEDULE 40 PVC PLASTIC PIPE WITH SCHEDULE 40 PVC SOLVENT-WELD FITTINGS. 18" COVER. 3" & LARGER: 1120-CL 200 GASKETED PVC PLASTIC POPE WITH CL 200 PVC ONE PIECE MOLDED GASKETED FITTINGS AND CONCRETE THRUST BLOCKING AT ALL CHANGES OF DIRECTION. 24" COVER.
		LATERAL LINE: 3/4" & LARGER: 1120-CL 200 PVC PLASTIC PIPE WITH SCHEDULE 40 PVC SOLVENT-WELD FITTINGS. 12" COVER.
		SLEEVING: 1120-SCHEDULE 40 PVC PLASTIC PIPE. COVER TO BE AS INDICATED IN SPECIFICATIONS OR AS INDICATED ABOVE FOR PIPE DEPTH OF COVER.

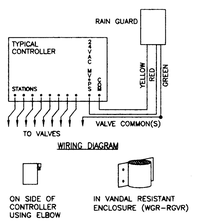

NOTES:
1. INSTALL RAIN GUARD RAIN SWITCH AT A FIELD DETERMINED LOCATION.
2. CONNECT TO CONTROLLER AS SHOWN.

RAIN SWITCH INSTALLATION
NOT TO SCALE

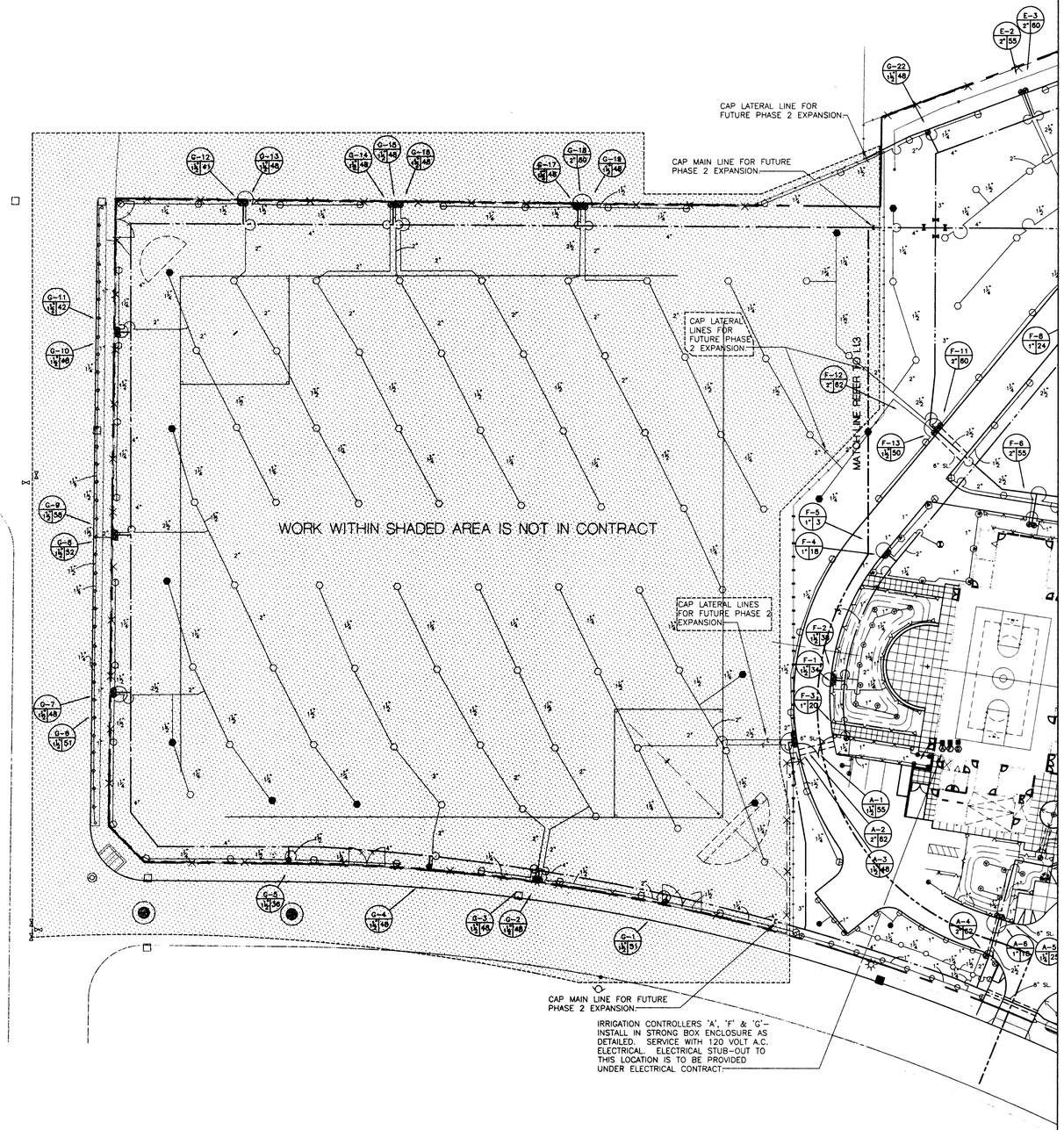

0 30 60 90

LANDSCAPE IRRIGATION

DICKSON DESIGN

MARTY DICKSON, ASIC, OWNER

TEL(530) 547-5515 FAX(530) 547-5513
P.O. BOX 418
PALO CEDRO, CALIFORNIA 96073

COPYRIGHT © 2000 HARLAN KRUSEMARK - ARCHITECT (HKA). THESE DRAWINGS ARE PROPRIETARY DOCUMENTS OF HKA AND ARE NOT TO BE DISTRIBUTED, PUBLISHED OR REPRODUCED WITHOUT WRITTEN PERMISSION OF HKA.

HAWKINS SCHOOL (HMC)/A/JOB/ 99-808/ HAW-L1-6 / LAYOUT1 /SCALE: 1:360 /2-19-2001 LK

HKA

Harlan Krusemark - Architect
1330 Arnold Drive, Suite 147
Martinez, CA 94553
Tel: 925.228.9989
Fax: 925.603.7734

LICENSED ARCHITECT HARLAN KRUSEMARK No. C23833 Exp. 9/30/01 STATE OF CALIFORNIA

REGISTERED LANDSCAPE ARCHITECT ARNOLD MITCHELL KELLER No. 1100 Exp. Jan.Aug 31,2001 STATE OF CALIFORNIA

KELLER MITCHELL & CO.
Landscape Architecture
111 New Montgomery Street, Suite 303
San Francisco, CA 94105
415/546-9987 Fax 415/546-9950

Revisions	Date

HAWKINS SCHOOL
(INCREMENT #1)

Darlene Lane
Tracy, CA 95376

Jefferson School District
7500 West Linne Road
Tracy, CA 95376

DSA FILE NO. 39-39

IDENTIFICATION STAMP
DIVISION OF THE STATE ARCHITECT
APPL02 _____
AC.____ FLS.____ SS.____
DATE _____

Sheet Title:

LANDSCAPE IRRIGATION PLAN WEST

Printing Date / Purpose:
5/2/00 DSA
8/18/00
2/23/01

Scale:
Project Number: 9903.00
Sheet Number:

L1.6 of Sheets

FILE:

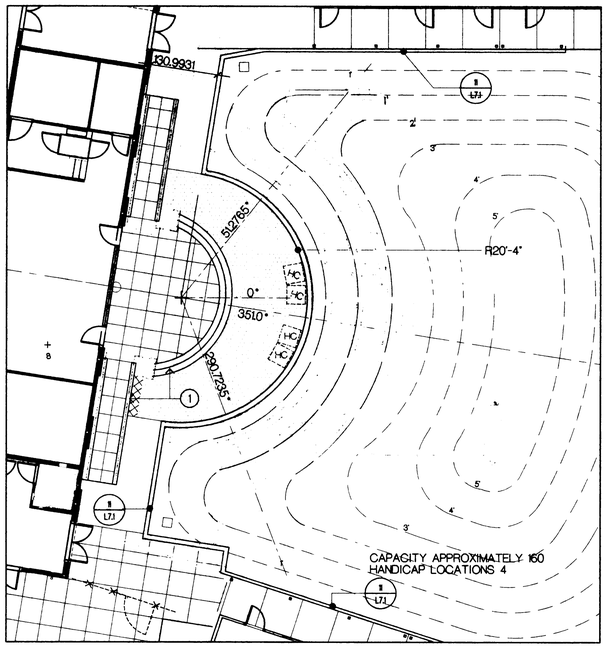

1 AMPHITHEATRE
SCALE: 1"-10'

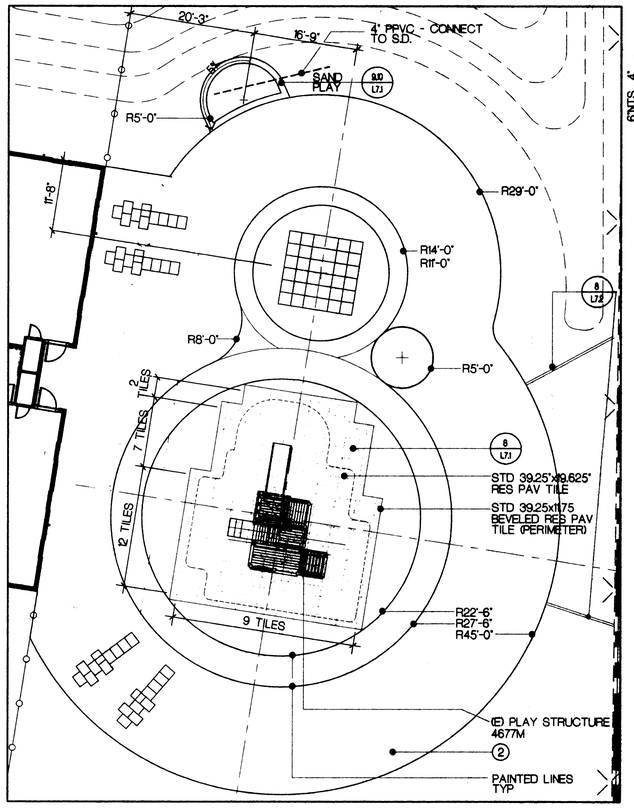

2 KINDERGARDEN PLAY YARD
SCALE: 1"-10'

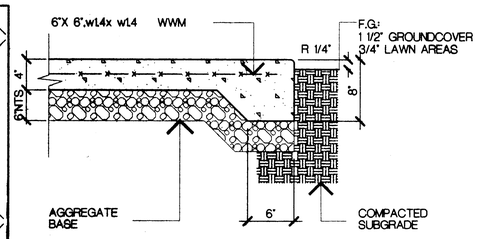

3 CONCRETE PAVING
SCALE: 1 1/2"-1'-0"

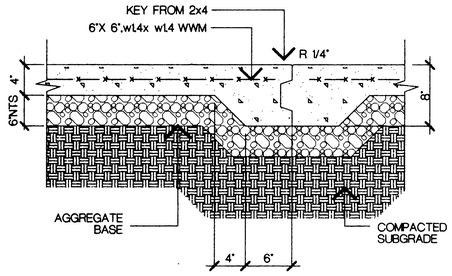

4 CONSTRUCTION JOINT
SCALE: 1 1/2"-1'-0"

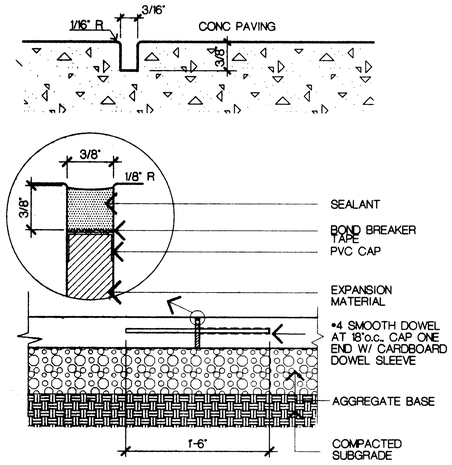

5 SCORE & EXPANSION JOINTS
SCALE: 1 1/2"-1'-0"

6 NOT USED
SCALE: NTS

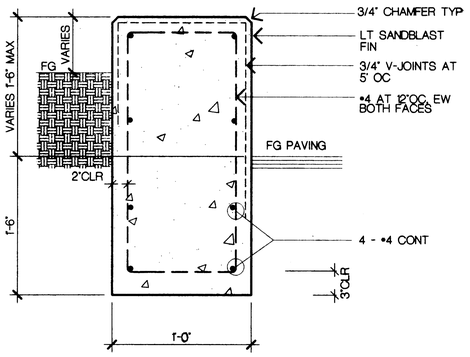

7 CONCRETE SEAT WALL
SCALE: 1 1/2"-1'-0"

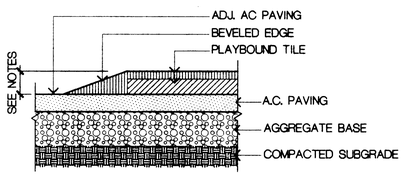

NOTES:
1. TILE THICKNESS IS TO BE AS FOLLOWS:
PLAYSTRUCTURE #4677M (48" FALL HT.): 1 3/4"
PLAYSTRUCTURE #4682 (72" FALL HT.): 2 3/8"
2. REFER TO SCHEDULE, SHEET L1.0 FOR RESILIENT TILE MFR.

8 RESILIENT PAVING TILE
SCALE: 1 1/2"-1'-0"

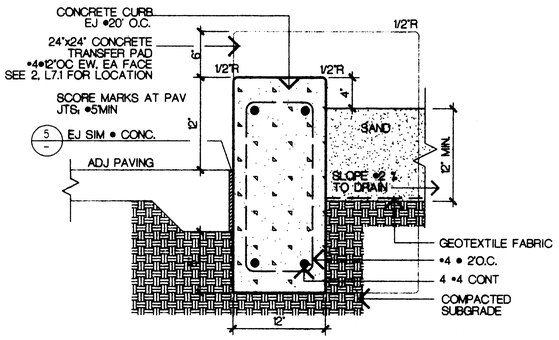

9 SAND PLAY
SCALE: 1 1/2"-1'-0"

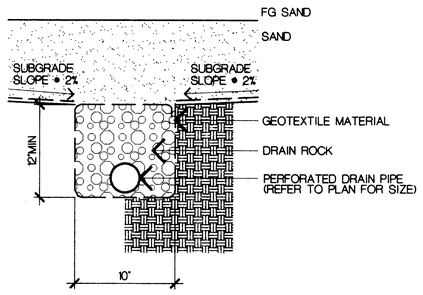

NOTE:
GEOTEXTILE MATERIAL TO BE MIRAFI 140NC AS MFR'D BY NICOLON/MIRAFI GROUP 800/234-0484

10 SAND PLAY DRAIN
SCALE: 1 1/2"-1'-0"

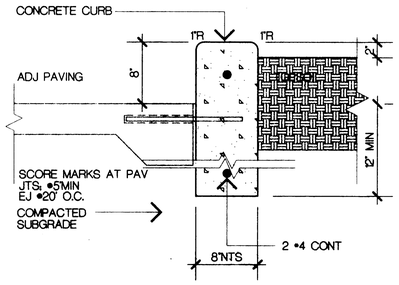

11 CONCRETE CURB
SCALE: 1 1/2"-1'-0"

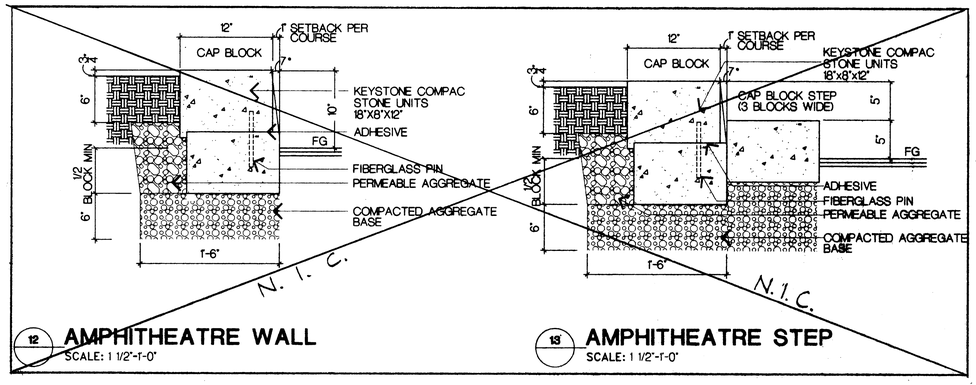

12 AMPHITHEATRE WALL
SCALE: 1 1/2"-1'-0"

13 AMPHITHEATRE STEP
SCALE: 1 1/2"-1'-0"

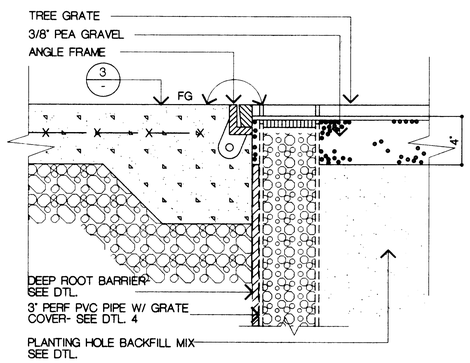

14 TREE GRATE
SCALE: 1'-10'-0"

COPYRIGHT © 2000 HARLAN KRUSEMARK - ARCHITECT (HKA) THESE DRAWINGS ARE PROPRIETARY DOCUMENTS OF HKA AND ARE NOT TO BE DISTRIBUTED, PUBLISHED OR REPRODUCED WITHOUT WRITTEN PERMISSION OF HKA.

HKA
Harlan Krusemark - Architect
1330 Arnold Drive, Suite 147
Martinez, CA 94553
Tel: 925.228.9989
Fax: 925.603.7734

LICENSED ARCHITECT
No C2883
Exp 9-30-01
STATE OF CALIFORNIA

REGISTERED LANDSCAPE ARCHITECT
No 2499
Exp Aug 30 2000
STATE OF CALIFORNIA

KELLER MITCHELL & CO.
Landscape Architecture
111 New Montgomery Street, Suite 303
San Francisco, CA 94105
415/546-9987 Fax 415/546-9950

Revisions	Date

HAWKINS SCHOOL
(INCREMENT #1)

Darlene Lane
Tracy, CA 95376

Jefferson School District
7500 West Linne Road
Tracy, CA 95376

DSA FILE NO. 39-39
IDENTIFICATION STAMP
DIVISION OF THE STATE ARCHITECT
APPL02 _____
AC ____ FLS ____ SS ____
DATE AUG 2 4 2000

Sheet Title:
LANDSCAPE CONSTRUCTION DETAILS

Printing Date / Purpose:
5/2/00 OSA
8/18/00

Scale: 1"-30'-0"
Project Number: 9903.00
Sheet Number:

L7.1
of Sheets

FILE:

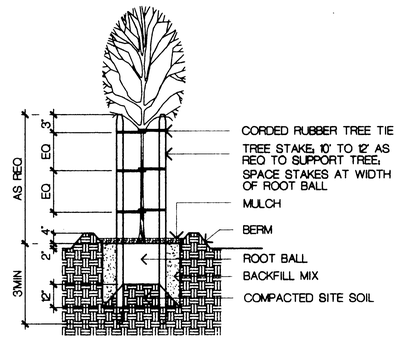

1 **TREE PLANTING**
SCALE: NTS

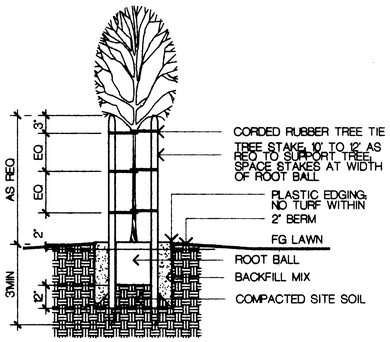

2 **TREE PLANTING IN LAWN**
SCALE: NTS

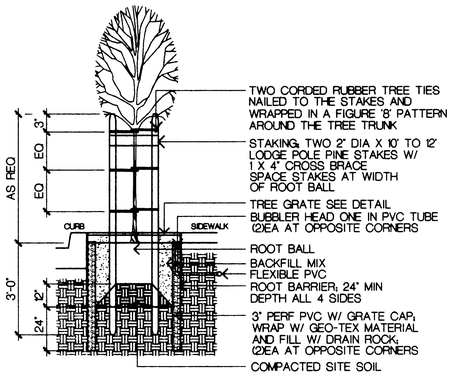

3 **TREE PLANTING IN GRATE**
SCALE: NTS

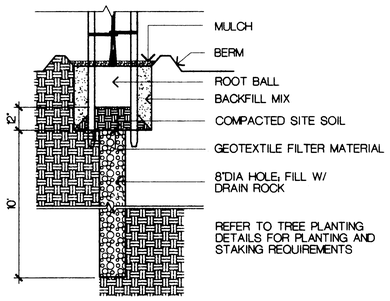

4 **TREE DRAIN HOLE**
SCALE: NTS

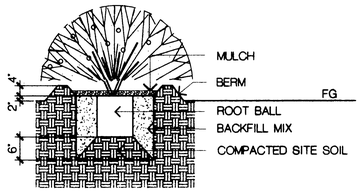

5 **SHRUB PLANTING**
SCALE: NTS

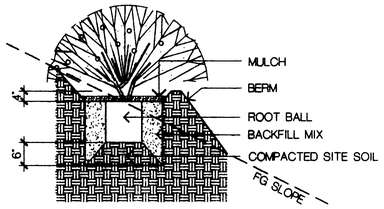

6 **SHRUB PLANTING ON SLOPE**
SCALE: NTS

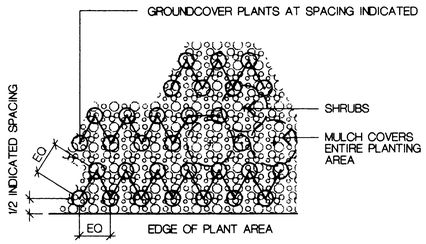

7 **GROUNDCOVER PLANTING**
SCALE: NTS

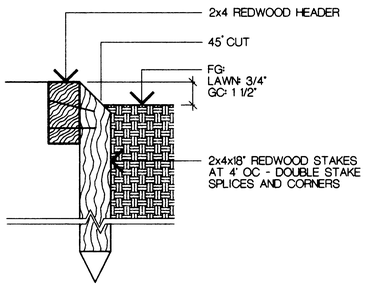

8 **REDWOOD HEADER**
SCALE: NTS

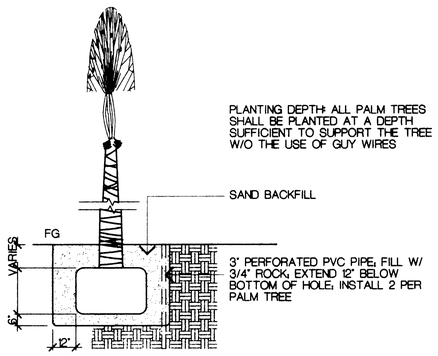

9 **PALM TREE PLANTING**
SCALE: NTS

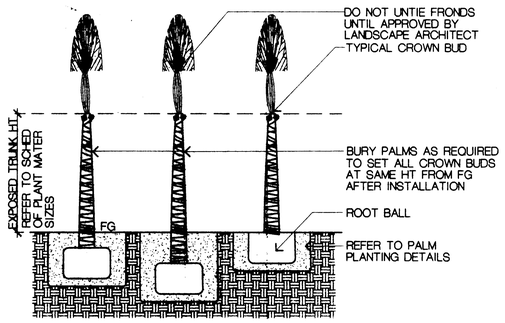

10 **PALM DEPTH**
SCALE: NTS

SCHEDULE OF PLANTING HOLE SIZES:

CONTAINER SIZE	SQUARE HOLE WIDTH	HOLE DEPTH
48" BOX	TREE WELL WIDTH	12" BELOW ROOT BALL
30" BOX	6'-0"	12" BELOW ROOT BALL
24" BOX	5'-0"	12" BELOW ROOT BALL
15" GAL	3'-0"	12" BELOW ROOT BALL
5 GAL	2'-0"	6" BELOW ROOT BALL
1 GAL	16"	6" BELOW ROOT BALL

HKA
Harlan Krusemark - Architect
1330 Arnold Drive, Suite 147
Martinez, CA 94553
Tel: 925.228.9989
Fax: 925.603.7734

KELLER MITCHELL & CO.
Landscape Architecture
111 New Montgomery Street, Suite 303
San Francisco, CA 94105
415/546-9987 Fax 415/546-9950

Revisions Date

HAWKINS SCHOOL
(INCREMENT #1)

Darlene Lane
Tracy, CA 95376

Jefferson School District
7500 West Linne Road
Tracy, CA 95376

DSA FILE NO. 39-39
IDENTIFICATION STAMP
DIVISION OF THE STATE ARCHITECT
APPL02
AC. FLS SS:
DATE AUG 2 4 2000

Sheet Title:
LANDSCAPE CONSTRUCTION & PLANTING DETAILS

Printing Date / Purpose:
5/2/00 OSA
8/18/00

Scale: 1"-30'-0"
Project Number: 9903.00
Sheet Number:

L7.2

of Sheets
FILE:

COPYRIGHT © 2000 HARLAN KRUSEMARK - ARCHITECT (HKA) THESE DRAWINGS ARE PROPRIETARY DOCUMENTS OF HKA AND ARE NOT TO BE DISTRIBUTED, PUBLISHED OR REPRODUCED WITHOUT WRITTEN PERMISSION OF HKA.

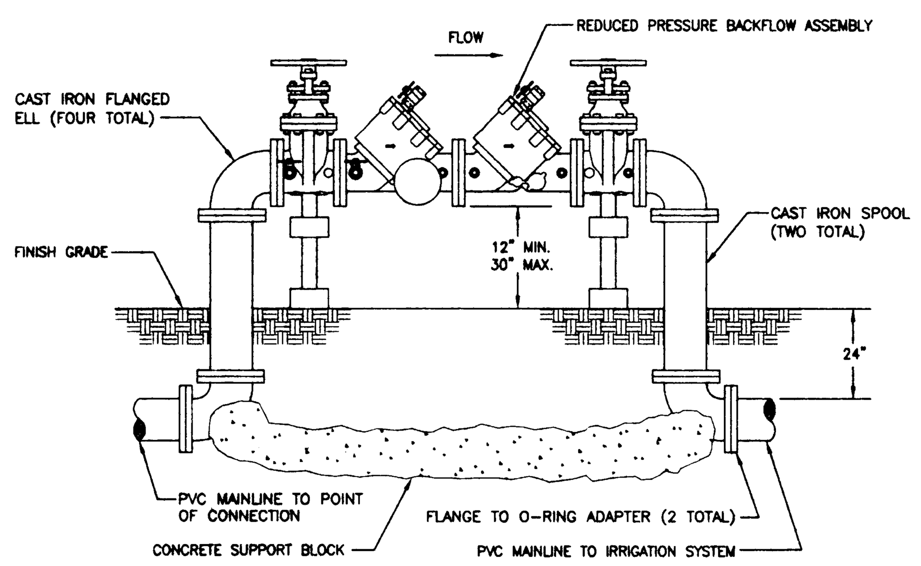

REDUCED PRESSURE BACKFLOW ASSEMBLY
NOT TO SCALE

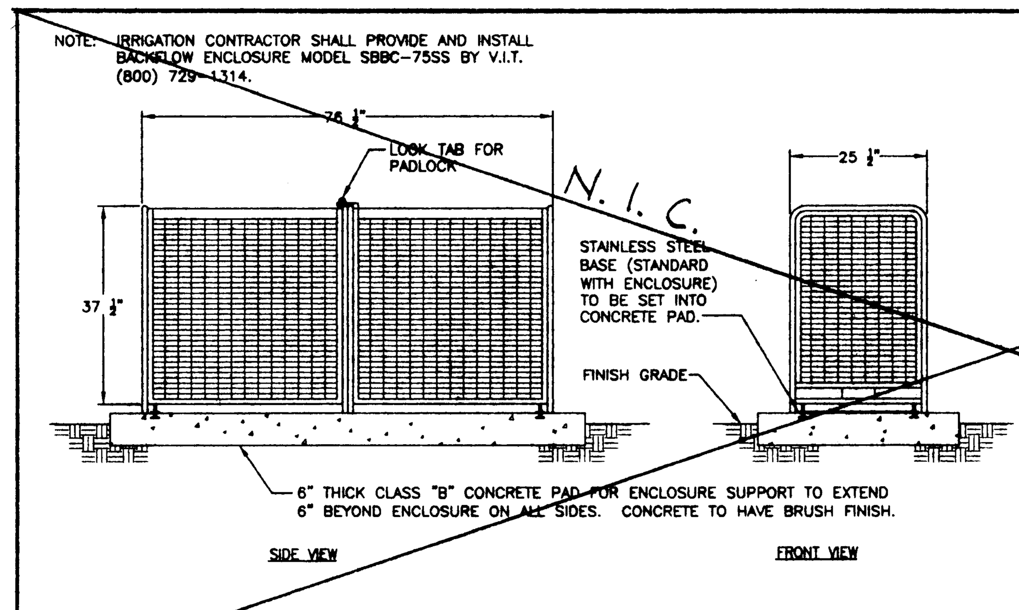

INSULATED BACKFLOW PREVENTER ENCLOSURE
NOT TO SCALE

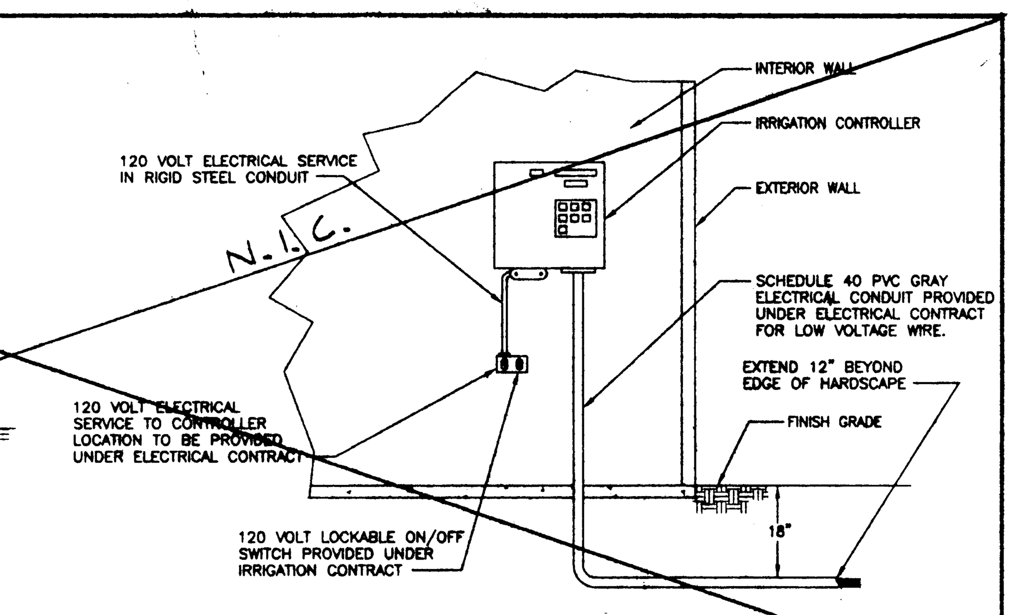

INTERIOR WALL MOUNT CONTROLLER
NOT TO SCALE

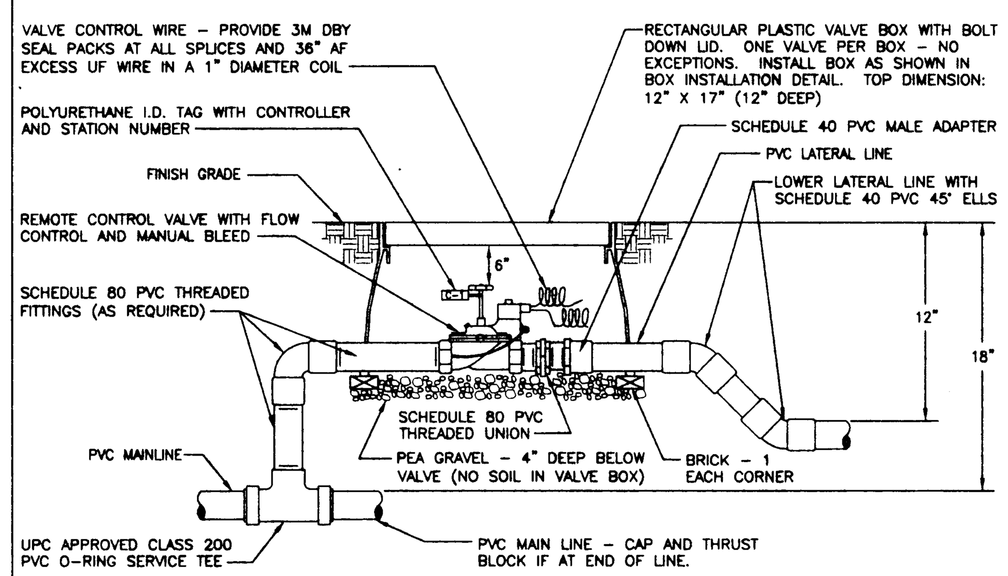

REMOTE CONTROL VALVE
NOT TO SCALE

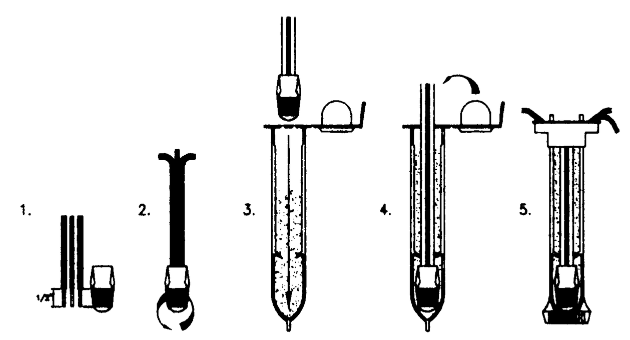

INSTRUCTIONS:

1. STRIP WIRES APPROXIMATELY 1/2" (12.7 MM) TO EXPOSE WIRE.
2. TWIST CONNECTOR AROUND WIRES CLOCKWISE UNTIL HAND TIGHT, DO NOT OVERTIGHTEN.
3. INSERT WIRE ASSEMBLY INTO PLASTIC TUBE UNTIL WIRE CONNECTOR SNAPS PAST LIP IN BOTTOM OF TUBE.
4. PLACE WIRES WHICH EXIT TUBE IN WIRE EXIT HOLES AND CLOSE CAP UNTIL IT SNAPS.
5. INSPECT FINAL SPLICE ASSEMBLY TO BE SECURE AND FINISHED.

WEATHERPROOF SPLICE ASSEMBLY
NOT TO SCALE

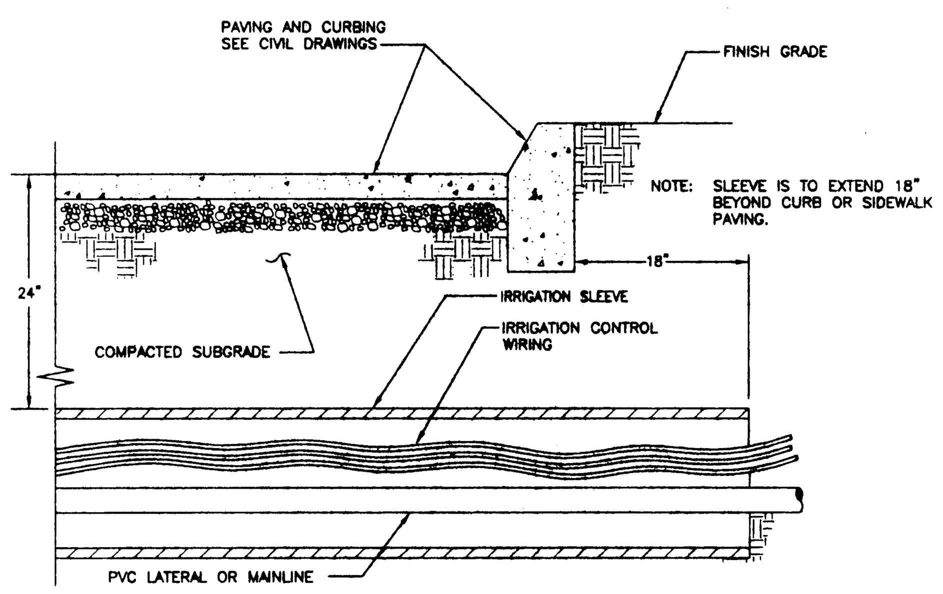

SLEEVING INSTALLATION
NOT TO SCALE

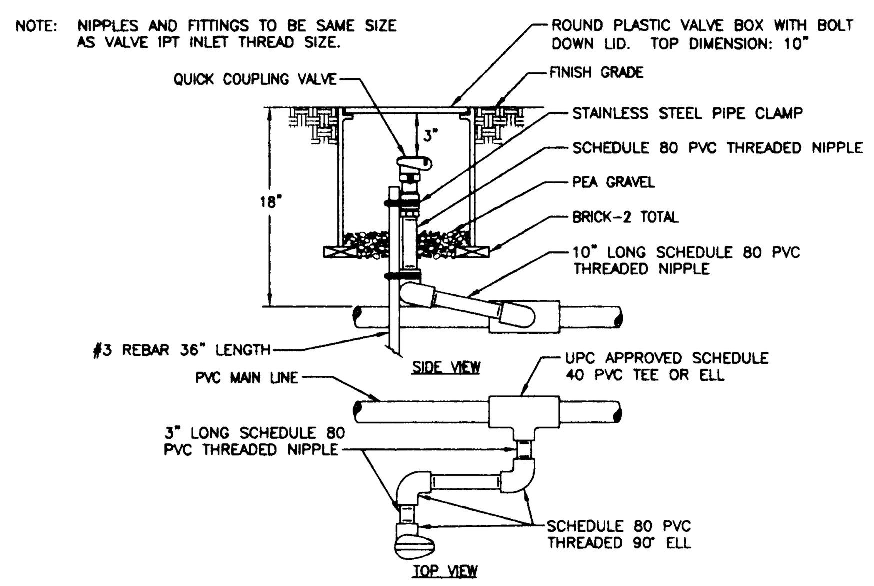

QUICK COUPLING VALVE
NOT TO SCALE

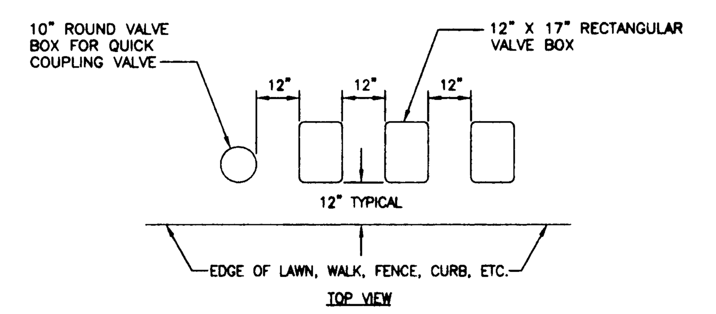

1. CENTER VALVE BOX OVER REMOTE CONTROL VALVE TO FACILITATE SERVICING VALVE.
2. SET BOXES 1" ABOVE FINISH GRADE OR MULCH COVER IN GROUND COVER/SHRUB AREA AND FINISH GRADE IN TURF AREA.
3. SET RCV AND VALVE BOX ASSEMBLY IN GROUND COVER/SHRUB AREA WHERE POSSIBLE. INSTALL IN LAWN ONLY IF GROUND COVER DOES NOT EXIST ADJACENT TO LAWN.
4. SET BOXES PARALLEL TO EACH OTHER AND PERPENDICULAR TO EDGE OF LAWN, WALK, FENCE, CURB, ETC.
5. AVOID HEAVILY COMPACTING SOIL AROUND VALVE BOXES TO PREVENT COLLAPSE AND DEFORMATION OF VALVE BOX SIDES.
6. INSTALL EXTENSION BY VALVE BOX MANUFACTURER AS REQUIRED TO COMPLETELY ENCLOSE ASSEMBLY FOR EASY ACCESS.

VALVE BOX INSTALLATION
NOT TO SCALE

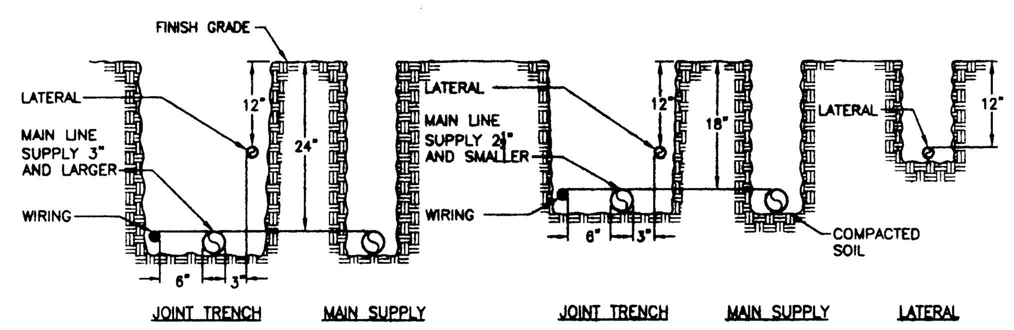

NOTES:

1. ALL PLASTIC PIPING SHALL BE INSTALLED IN THE TRENCH IN A SERPENTINE MANNER AS PER THE MANUFACTURER'S SPECIFICATIONS.
2. ALL SUPPLY LINES TO BE INSTALLED AS PER MANUFACTURER SPECIFICATIONS.
3. TAPE AND BUNDLE TUBING OR WIRING AT 10 FEET INTERVALS.
4. ALL 120 VOLT WIRING IN CONDUIT TO BE INSTALLED IN ACCORDANCE WITH ALL APPLICABLE CODES.
5. BACKFILL MATERIAL SHALL BE THE EARTH EXCAVATED FROM THE TRENCHES, FREE FROM ROCKS, CONCRETE CHUNKS, AND OTHER FOREIGN OR COARSE MATERIALS. CAREFULLY SELECT BACKFILL THAT IS TO BE PLACED NEXT TO PLASTIC PIPE TAP AVOID ANY SHARP OBJECTS WHICH MAY DAMAGE THE PIPE.

TRENCHING DETAIL
NOT TO SCALE

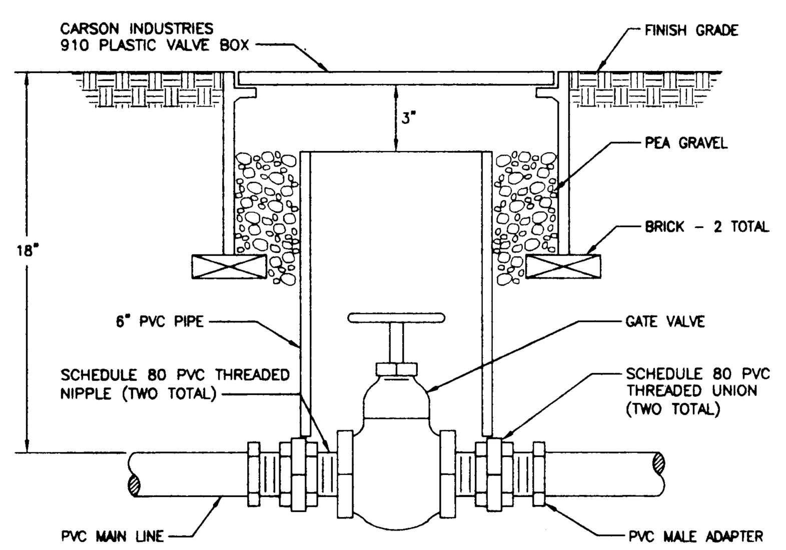

GATE VALVE 2 1/2" & SMALLER
NOT TO SCALE

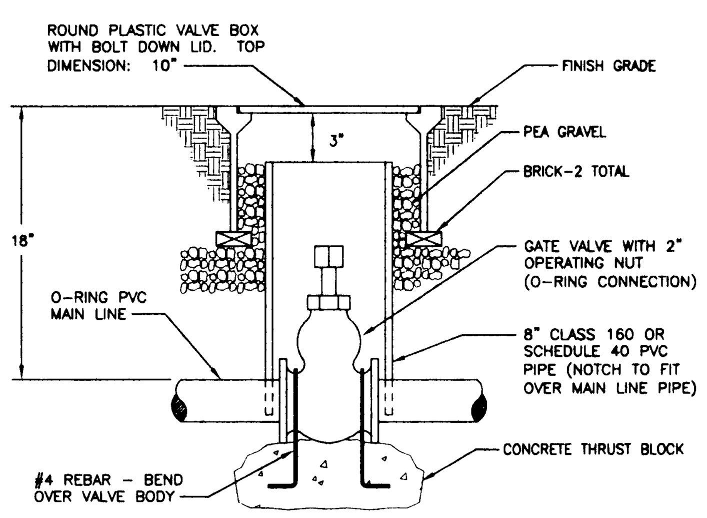

GATE VALVE 3" & LARGER
NOT TO SCALE

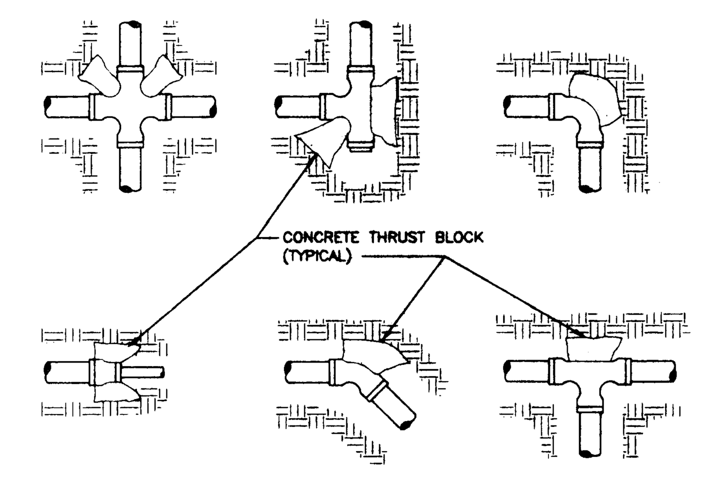

INSTALL MAIN LINE AS PER MANUFACTURER'S INSTALLATION GUIDE. SIZE OF CONCRETE THRUST BLOCKS SHALL BE PER MANUFACTURER'S INSTALLATION GUIDE.

TYPICAL THRUST BLOCK DETAIL
NOT TO SCALE

IRRIGATION NOTES

1. THESE IRRIGATION DRAWINGS ARE DIAGRAMMATIC AND INDICATIVE OF THE WORK TO BE INSTALLED. ALL PIPING, VALVES, ETC. SHOWN WITHIN PAVED AREAS IS FOR CLARITY ONLY AND ARE TO BE INSTALLED WITHIN PLANTING AREAS WHERE POSSIBLE. DUE TO THE SCALE OF THE DRAWINGS, IT IS NOT POSSIBLE TO INDICATE ALL OFFSETS, FITTINGS, SLEEVES, ETC., WHICH MAY BE REQUIRED. THE CONTRACTOR IS REQUIRED TO INVESTIGATE THE STRUCTURAL AND FINISHED CONDITIONS AFFECTING ALL OF THE CONTRACT WORK INCLUDING OBSTRUCTIONS, GRADE DIFFERENCES OR AREA DIMENSIONAL DIFFERENCES WHICH MAY NOT HAVE BEEN CONSIDERED IN THE ENGINEERING. IN THE EVENT OF FIELD DIFFERENCES, THE CONTRACTOR IS REQUIRED TO PLAN THE INSTALLATION WORK ACCORDINGLY BY NOTIFICATION AND APPROVAL OF THE OWNER'S AUTHORIZED REPRESENTATIVE AND ACCORDING TO THE CONTRACT SPECIFICATION. THE CONTRACTOR IS ALSO REQUIRED TO NOTIFY AND COORDINATE IRRIGATION CONTRACT WORK WITH ALL APPLICABLE CONTRACTORS FOR THE LOCATION AND INSTALLATION OF PIPE, CONDUIT OR SLEEVES THROUGH OR UNDER WALLS, ROADWAYS, PAVING, STRUCTURE, ETC., BEFORE CONSTRUCTION. IN THE EVENT THESE NOTIFICATIONS ARE NOT PERFORMED, THE CONTRACTOR SHALL ASSUME FULL RESPONSIBILITY FOR ALL REQUIRED REVISIONS.

2. THE INTENT OF THIS IRRIGATION SYSTEM IS TO PROVIDE THE MINIMUM AMOUNT OF WATER REQUIRED TO SUSTAIN GOOD PLANT HEALTH.

3. IT IS THE RESPONSIBILITY OF THE LANDSCAPE MAINTENANCE CONTRACTOR AND/OR OWNER TO PROGRAM THE IRRIGATION CONTROLLERS TO PROVIDE THE MINIMUM AMOUNT OF WATER NEEDED TO SUSTAIN GOOD PLANT HEALTH. THIS INCLUDES MAKING ADJUSTMENTS TO THE PROGRAM FOR SEASONAL WEATHER CHANGES, PLANT MATERIAL, WATER REQUIREMENTS, MOUNDS AND SLOPES, SUN, SHADE, AND WIND EXPOSURES.

4. 120 VOLT A.C. (2.5 AMP DEMAND PER CONTROLLER) ELECTRICAL SERVICE TO IRRIGATION CONTROLLER LOCATION(S) TO BE PROVIDED UNDER ELECTRICAL CONTRACT WORK. IRRIGATION CONTRACTOR TO MAKE FINAL CONNECTION FROM ELECTRICAL STUB-OUT TO CONTROLLER(S) AND PROVIDE PROPER GROUNDING PER CONTROLLER MANUFACTURER'S INSTRUCTIONS.

5. EACH IRRIGATION CONTROLLER TO HAVE ITS OWN INDEPENDENT 24 VOLT COMMON GROUND WIRE.

6. INSTALL NEW BATTERIES IN IRRIGATION CONTROLLER(S) TO RETAIN PROGRAM IN MEMORY DURING TEMPORARY POWER FAILURES. USE QUANTITY, TYPE, AND SIZE REQUIRED AS PER CONTROLLER MANUFACTURER'S INSTRUCTIONS.

7. THE IRRIGATION SYSTEM IS DESIGNED SUCH THAT 3 CONTROLLERS MAY OPERATE SIMULTANEOUSLY WITH ONE REMOTE CONTROL VALVE ACTIVATED PER CONTROLLER.

8. IRRIGATION CONTROL WIRES SHALL BE COPPER WITH U.L. APPROVAL FOR DIRECT BURIAL IN GROUND, SIZE #14-1. COMMON GROUND WIRE SHALL HAVE WHITE INSULATING JACKET. CONTROL WIRE SHALL HAVE INSULATING JACKET OF COLOR OTHER THAN WHITE. SPLICE SHALL BE MADE WITH 3M-DBY SEAL PACKS.

9. INSTALL SPARE CONTROL WIRE OF A DIFFERENT COLOR ALONG THE ENTIRE MAIN LINE. LOOP 36" EXCESS WIRE INTO EACH SINGLE VALVE BOX AND INTO ONE VALVE BOX IN EACH GROUP OF VALVES. MINIMUM OF ONE SPARE WIRE PER CONTROLLER.

10. SPLICING OF 24 VOLT WIRES IS NOT PERMITTED EXCEPT IN VALVE BOXES. LEAVE A 36" LONG, 1" DIAMETER COIL OF EXCESS WIRE AT EACH SPLICE AND A 36" LONG EXPANSION LOOP EVERY 100 FEET ALONG WIRE RUN. TAPE WIRES TOGETHER EVERY TEN FEET. TAPING WIRES IS NOT REQUIRED INSIDE SLEEVES.

11. PLASTIC VALVE BOXES ARE TO BE GREEN IN COLOR WITH BOLT DOWN, NON-HINGED COVER MARKED "IRRIGATION". BOX BODY SHALL HAVE KNOCK OUTS. MANUFACTURER SHALL BE CARSON INDUSTRIES.

12. INSTALL REMOTE CONTROL VALVE BOXES 12" FROM WALK, CURB, LAWN, HEADER BOARD, BUILDING, OR LANDSCAPE FEATURE. AT MULTIPLE VALVE BOX GROUPS, EACH BOX SHALL BE AN EQUAL DISTANCE FROM THE WALK, CURB. LAWN, ETC. AND EACH BOX SHALL BE 12" APART. SHORT SIDE OF RECTANGULAR VALVE BOXES SHALL BE PARALLEL TO WALK, CURB, ETC.

13. THE REMOTE CONTROL VALVE SPECIFIED ON THE DRAWINGS IS A PRESSURE REDUCING TYPE. SET THE DISCHARGE PRESSURE AS FOLLOWS:
    1. SPRAY HEADS= 40 PSI
    2. ROTARY HEADS= 60 PSI

14. FOR 3" AND LARGER MAIN LINE PIPING INSIDE SLEEVES USE 1120-315 PSI PVC PLASTIC PIPE WITH SCHEDULE 40 PVC COUPLINGS. NO RING-TITE COUPLINGS INSIDE SLEEVES.

15. THE IRRIGATION CONTRACTOR SHALL FLUSH AND ADJUST ALL SPRINKLER HEADS FOR OPTIMUM PERFORMANCE AND TO PREVENT OVER SPRAY ONTO WALKS, ROADWAYS, AND/OR BUILDINGS AS MUCH AS POSSIBLE. THIS SHALL INCLUDE SELECTING THE BEST DEGREE OF ARC TO FIT THE EXISTING SITE CONDITIONS AND TO THROTTLE THE FLOW CONTROL AT EACH VALVE TO OBTAIN THE OPTIMUM OPERATING PRESSURE FOR EACH SYSTEM.

16. ALL SPRINKLER HEADS SHALL BE SET PERPENDICULAR TO FINISH GRADE OF THE AREA TO BE IRRIGATED UNLESS OTHERWISE NOTED ON THE DRAWINGS.

17. LOCATE BUBBLERS ON UP-HILL SIDE OF PLANT OR TREE.

18. WHERE IT IS NECESSARY TO EXCAVATE ADJACENT TO EXISTING TREES, THE CONTRACTOR SHALL USE ALL POSSIBLE CARE TO AVOID INJURY TO TREES AND TREE ROOTS. EXCAVATION IN AREAS WHERE TWO (2) INCH AND LARGER ROOTS OCCUR SHALL BE DONE BY HAND. TRENCHES ADJACENT TO TREE SHOULD BE CLOSED WITHIN TWENTY-FOUR (24) HOURS; AND WHERE THIS IS NOT POSSIBLE, THE SIDE OF THE TRENCH ADJACENT TO THE TREE SHALL BE KEPT SHADED WITH BURLAP OR CANVAS.

19. IRRIGATION CONTRACTOR TO NOTIFY ALL LOCAL JURISDICTIONS FOR INSPECTION AND TESTING OF INSTALLED BACKFLOW PREVENTION DEVICE.

20. THE SPRINKLER SYSTEM DESIGN IS BASED ON THE MINIMUM OPERATING PRESSURE SHOWN ON THE IRRIGATION DRAWINGS. THE IRRIGATION CONTRACTOR SHALL VERIFY WATER PRESSURE PRIOR TO CONSTRUCTION. REPORT ANY DIFFERENCE BETWEEN THE WATER PRESSURE INDICATED ON THE DRAWINGS AND THE ACTUAL PRESSURE READING AT THE IRRIGATION POINT OF CONNECTION TO THE OWNER'S AUTHORIZED REPRESENTATIVE.

21. IRRIGATION DEMAND: 150 GPM AT 85 PSI STATIC PRESSURE AT IRRIGATION POINT OF CONNECTION.

22. PIPE THREAD SEALANT COMPOUND SHALL BE LASCO #905-305, PERMATEX 51 OR RECTOR SEAL T+2.

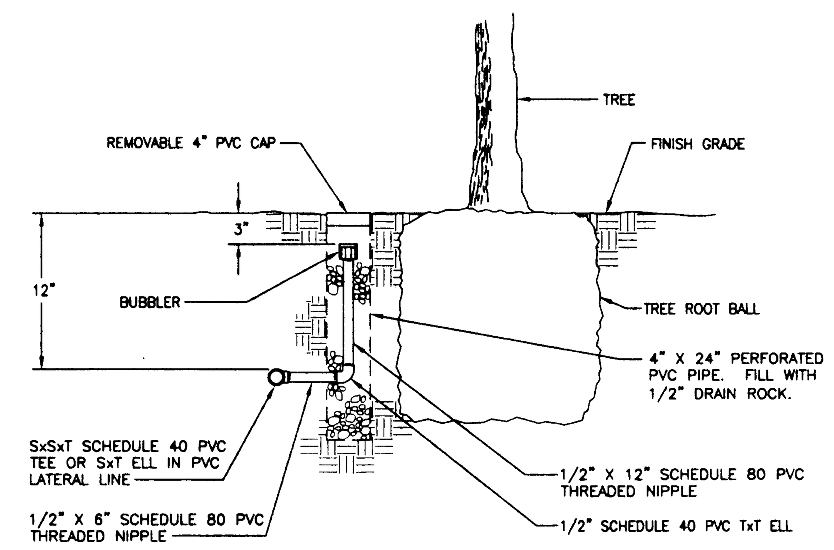

TREE BUBBLER
NOT TO SCALE

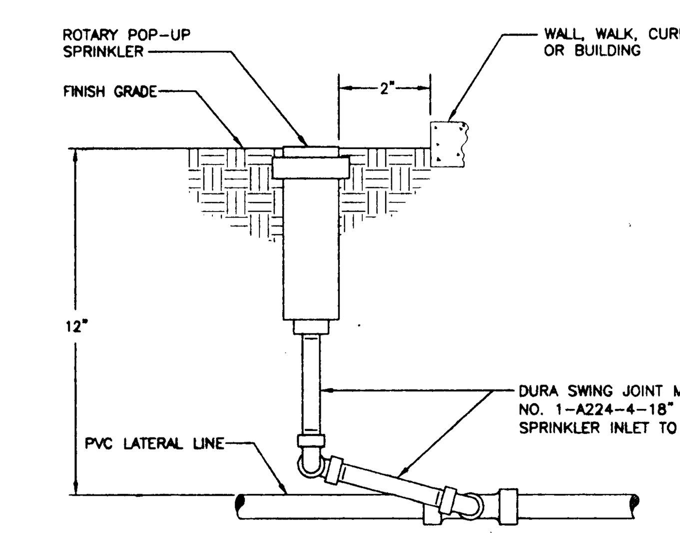

ROTARY SPRINKLER RISER LAWN
NOT TO SCALE

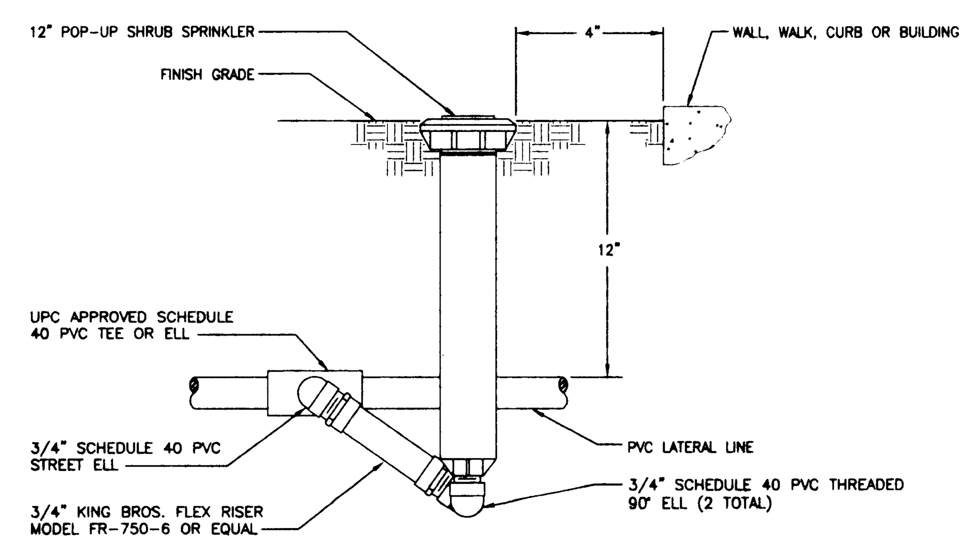

ROTARY SPRINKLER RISER SHRUB
NOT TO SCALE

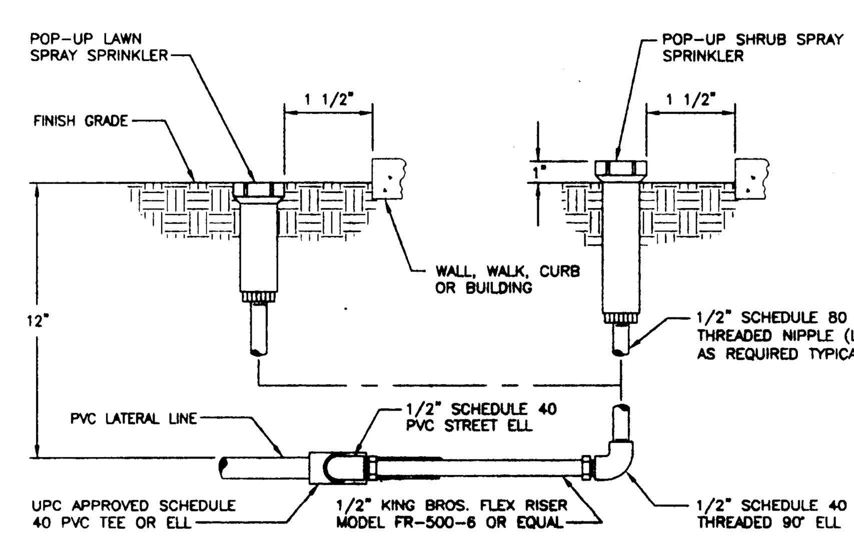

POP-UP SPRAY SPRINKLER RISER
NOT TO SCALE

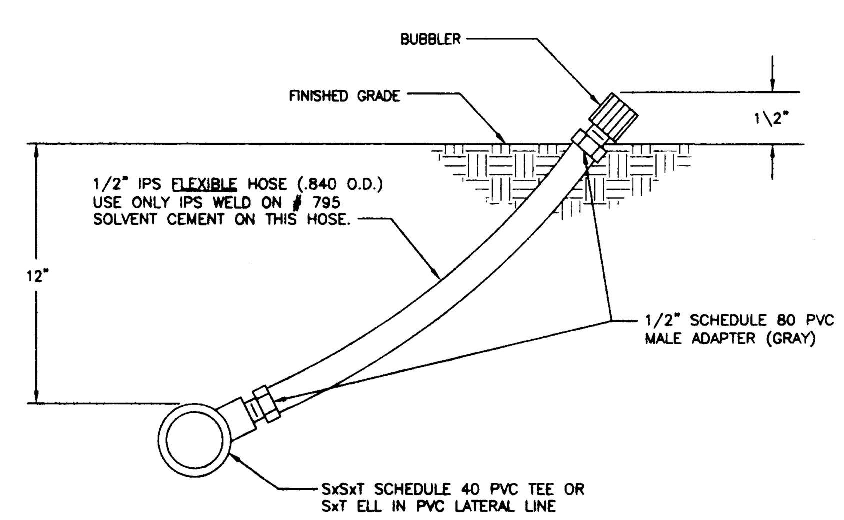

SHRUB BUBBLER WITH FLEXIBLE RISER
NOT TO SCALE

LANDSCAPE IRRIGATION
DICKSON DESIGN
MARTY DICKSON, ASIC, OWNER
TEL(530) 547-5515 FAX(530) 547-5513
P.O. BOX 415
PALO CEDRO, CALIFORNIA 96073

HKA
Harlan Krusemark - Architect
1330 Arnold Drive, Suite 147
Martinez, CA 94553
Tel: 925.228.9989
Fax: 925.603.7734

KELLER MITCHELL & CO.
Landscape Architecture
111 New Montgomery Street, Suite 303
San Francisco, CA 94105
415/546-9967 Fax 415/546-9960

Revisions | Date

HAWKINS SCHOOL (INCREMENT #1)

Darlene Lane
Tracy, CA 95376

Jefferson School District
7500 West Linne Road
Tracy, CA 95376

DSA FILE NO. 39-39
IDENTIFICATION STAMP
DIVISION OF THE STATE ARCHITECT
APPL02 ___
AC___ FLS___ SS___
DATE AUG 2 4 2000

Sheet Title:
LANDSCAPE IRRIGATION DETAILS

Printing Date / Purpose:
5/2/00 OSA
8/18/00

Scale:
Project Number: 9903.00
Sheet Number:

L7.3

of Sheets

FILE:

COPYRIGHT © 2000 HARLAN KRUSEMARK - ARCHITECT (HKA) THESE DRAWINGS ARE PROPRIETARY DOCUMENTS OF HKA AND ARE NOT TO BE DISTRIBUTED, PUBLISHED OR REPRODUCED WITHOUT WRITTEN PERMISSION OF HKA.

HAWKINS SCHOOL (KMC)/A/JOB/99-808/ L-IRRD / 1 /SCALE: NTS /3-13-2000 LK

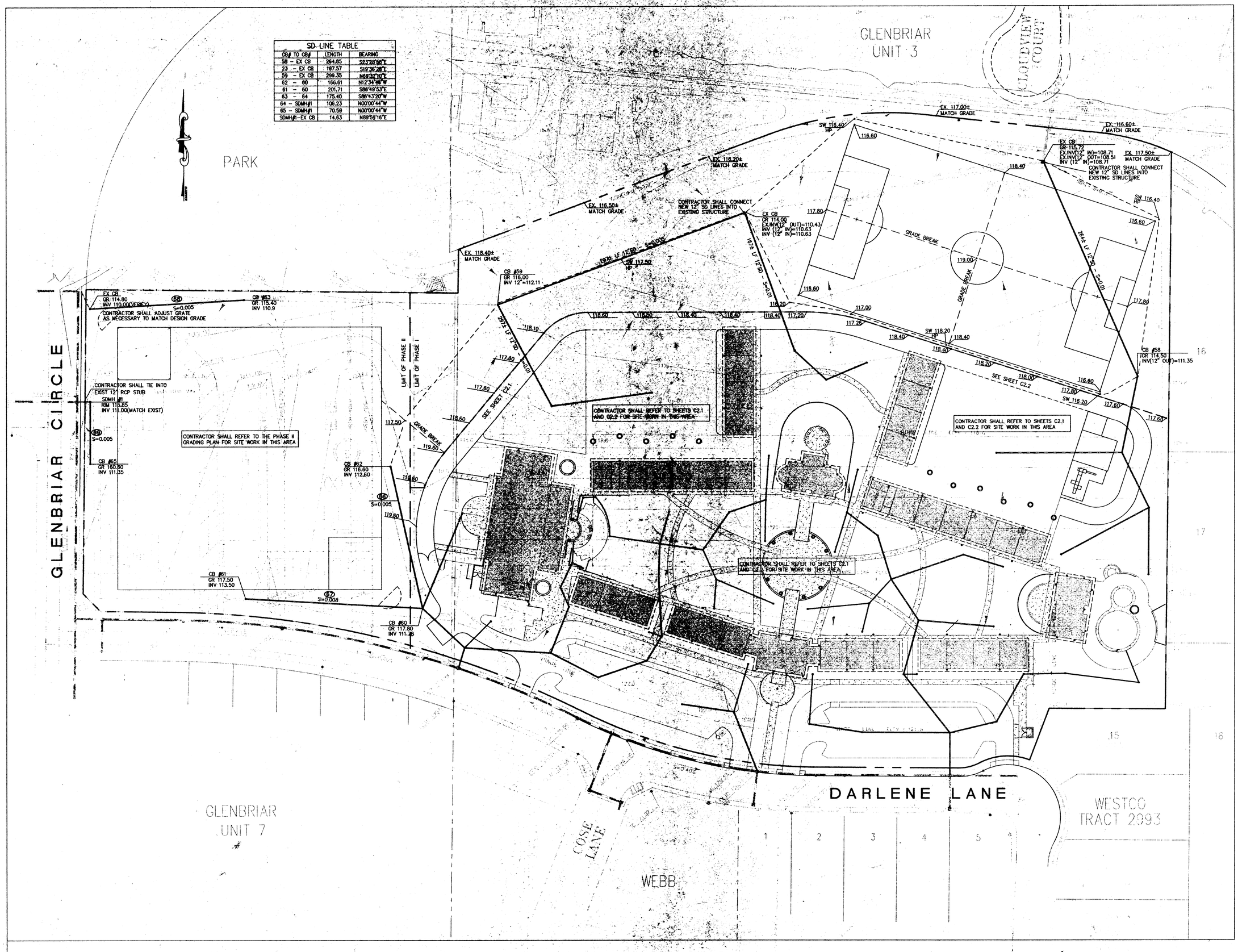

SD LINE TABLE		
CB# TO CB#	LENGTH	BEARING
58 – EX CB	264.85	S23°28'58"E
23 – EX CB	167.57	S19°36'28"E
59 – EX CB	299.35	N69°32'10"E
62 – 60	166.61	N12°34'46"W
61 – 60	201.71	S86°49'53"E
63 – 64	175.40	S86°43'20"W
64 – SDMH#1	106.23	N00°00'44"W
65 – SDMH#1	70.59	N00°00'44"W
SDMH#1–EX CB	14.63	N89°59'16"E

HKA
Harlan Krusemark - Architect
4415 Cowell Road, Suite 230
Concord, CA 94521
Tel: 925.681.1905
Fax: 925.681.1906

& Associates
MILANI
3480 Buskirk Avenue, Suite 225
Pleasant Hill, CA 94523
Tel: 925.941.1490
Fax: 925.941.1496

Revisions	Date
△	
△	
△	
△	
△	
△	

HAWKINS SCHOOL
(INCREMENTS #1 & #2)

475 Darlene Lane
Tracy, CA 95377

Jefferson School District
7500 West Linne Road
Tracy, CA 95304

DSA FILE NO. 39-39
IDENTIFICATION STAMP
DIVISION OF THE STATE ARCHITECT
APPL 02 -102225
ACTIVE FLS SS
DATE AUG 2 4 2000

Sheet Title:

GRADING
AND DRAINAGE PLAN

Printing Date / Purpose:
-

Scale: 1"=40'
Project Number: 9903.00
Sheet Number:

C2.0
of Sheets
FILE:

COPYRIGHT © 2000 HARLAN KRUSEMARK - ARCHITECT (HKA) THESE DRAWINGS ARE PROPRIETARY DOCUMENTS OF HKA AND ARE NOT TO BE DISTRIBUTED, PUBLISHED OR REPRODUCED WITHOUT WRITTEN PERMISSION OF HKA.

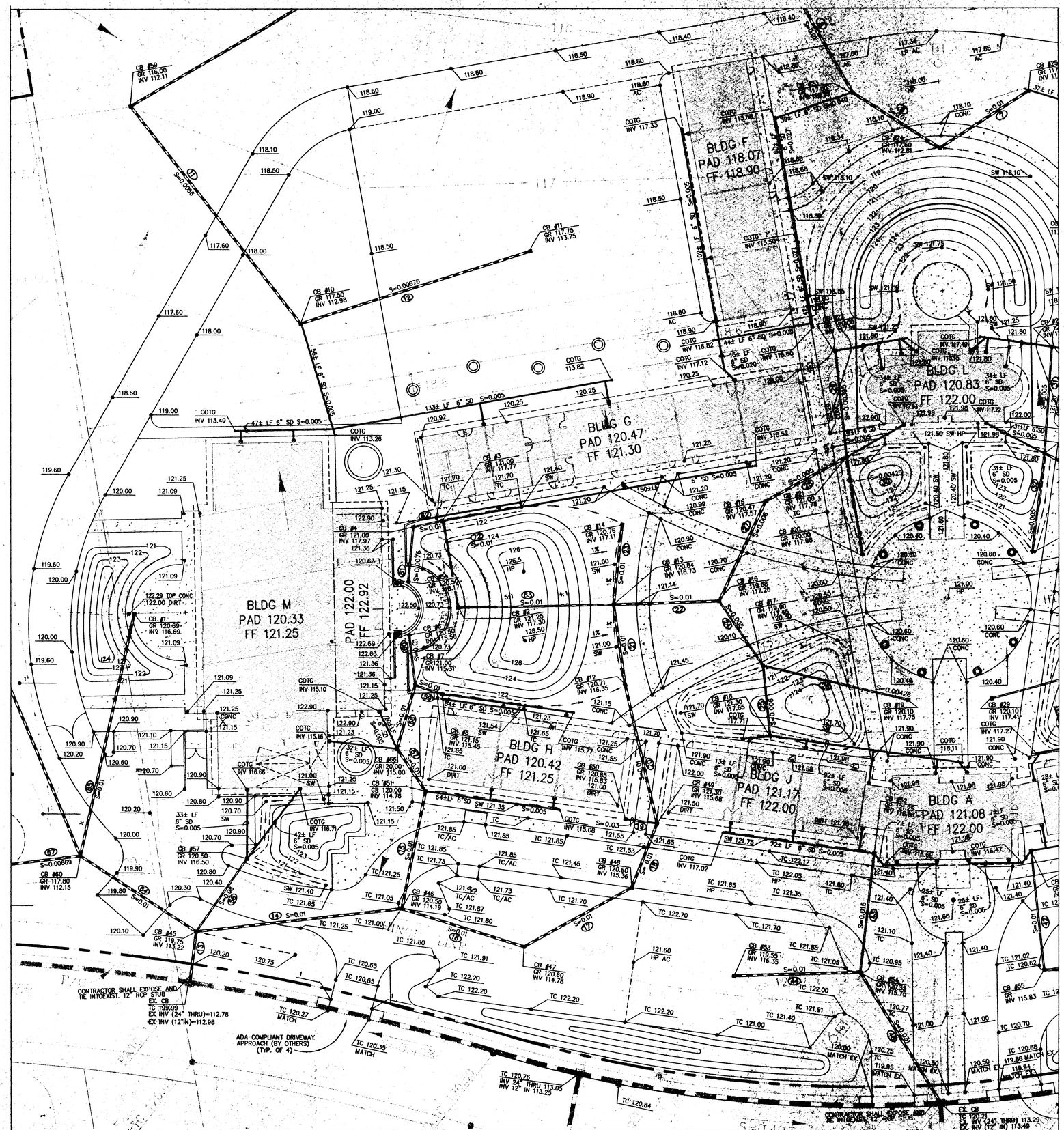

SD LINE TABLE					
DWG	LINE #	CB# TO CB#	PIPE SIZE	LENGTH	BEARING
2.2	1	38 - 40	12" SD	76.23	S00°28'51"E
2.2	2	39 - 40	12" SD	112.83	S61°56'33"W
2.2	3	40 - 41	12" SD	69.97	N25°47'33"W
2.2	4	42 - 41	12" SD	142.92	S89°59'54"W
2.2	5	41 - 58	12" SD	88.53	N11°36'02"E
2.0	6	58 - EX CB	12" SD	264.85	S23°28'58"E
2.2	7	25 - 24	12" SD	49.95	N67°05'35"E
2.1	8	24 - 23	12" SD	48.90	S47°23'34"E
2.0	9	23 - EX CB	12" SD	167.57	S19°36'28"E
2.0	10	59 - EX CB	12" SD	299.35	N69°32'10"E
2.1	11	10 - 59	12" SD	130.97	N27°46'34"W
2.1	12	11 - 10	12" SD	113.90	S82°24'39"W
2.1	13	45 - EX CB	12" SD	24.22	N17°02'57"E
2.1	14	46 - 45	12" SD	97.83	S86°24'22"E
2.1	15	51 - 46	12" SD	56.94	S21°21'38"W
2.1	16	47 - 46	12" SD	60.45	N62°32'47"W
2.1	17	48 - 47	12" SD	58.13	S71°03'53"W
2.1	18	49 - 48	12" SD	32.71	S31°15'07"W
2.1	19	50 - 49	8" SD	15.00	N72°00'00"W
2.1	20	12 - 49	12" SD	67.57	S02°52'24"E
2.1	21	13 - 12	12" SD	38.57	S01°55'04"W
2.1	22	16 - 13	12" SD	49.73	S81°49'57"E
2.1	23	14 - 13	12" SD	38.21	S16°09'57"W
2.1	24	17 - 16	8" SD	37.15	N23°58'58"W
2.1	25	18 - 17	8" SD	33.51	N04°21'04"E
2.1	26	19 - 17	8" SD	70.38	N66°40'00"W
2.1	27	15 - 16	12" SD	52.20	N34°52'06"E
2.1	28	21 - 15	12" SD	43.74	S71°03'55"W
2.1	29	22 - 21	- SD	50.62	S03°58'01"W
2.1	30	20 - 21	- SD	46.99	N00°54'58"E
2.2	31	26 - 27	6" SD	50.62	S14°01'59"W
2.2	32	28 - 27	6" SD	46.99	N17°05'02"E
2.1	33	27 - 33	- SD	43.74	N53°03'55"W
2.2	34	33 - 32	12" SD	52.27	S16°55'02"E
2.2	35	29 - 31	8" SD	70.38	S84°40'00"W
2.2	36	30 - 31	8" SD	33.51	N13°38'56"E
2.2	37	31 - 32	8" SD	37.15	S42°06'50"W
2.2	38	34 - 32	12" SD	87.04	N71°13'23"E
2.2	39	44 - 34	12" SD	47.00	S72°54'52"E
2.2	40	43 - 35	12" SD	85.63	N85°09'16"W
2.2	41	37 - 36	8" SD	84.13	N82°48'05"W
2.2	42	56 - 55	8" SD	56.96	S03°44'35"W
2.1	43	52 - 54	8" SD	56.86	S16°36'43"W
2.1	44	53 - 54	12" SD	59.59	S81°35'29"E
2.1	45	54 - EX CB	12" SD	72.87	S21°29'57"E
2.2	46	55 - 67	12" SD	60.65	S80°59'02"E
2.2	47	67 - 68	12" SD	100.00	S89°37'40"E
2.2	48	68 - EX CB	12" SD	48.75	N00°00'00"W
2.2	49	71 - 68	12" SD	85.28	N38°13'23"W
2.2	50	69 - 68	12" SD	54.53	S76°35'30"W
2.2	51	70 - 69	12" SD	62.41	S29°27'11"W
2.2	52	36 - 70	8" SD	47.54	S89°02'45"W
2.2	53	72 - 71	8" SD	15.00	N90°00'00"W
2.2	54	35 - 71	12" SD	63.89	S15°28'46"W
2.2	55	32 - 35	12" SD	56.48	N33°34'26"W
2.1	56	57 - 45	8" SD	42.25	S44°32'57"W
2.1	57	66 - 51	12" SD	24.25	S23°41'49"E
2.1	58	7 - 66	12" SD	31.56	S25°38'15"W
2.1	59	8 - 7	8" SD	13.55	N61°06'07"W
2.1	60	6 - 7	8" SD	23.84	S03°20'44"W
2.1	61	5 - 4	8" SD	26.04	S15°15'07"W
2.1	62	4 - 3	8" SD	13.99	S87°56'56"W
2.1	63	2 - 13	12" SD	57.52	S81°08'30"E
2.1	64	60 - 45	12" SD	65.70	S46°37'10"E
2.1	65	1 - 60	12" SD	117.94	S22°35'45"W
2.0	66	62 - 60	12" SD	166.61	N12°34'46"W
2.0	67	61 - 60	12" SD	201.71	S86°49'53"E
2.0	68	EX. CB - 64	- SD	175.40	S86°43'20"W
2.0	70	65 - SDMH#1	- SD	70.59	N00°00'44"W
2.1	72	3 - 2	8" SD	40.46	RADIUS=60.00

(N.I.C.)

LEGEND

- ROOF LEADER DOWNSPOUT
- COTG INSTALL CLEANOUT IN F14 CHRISTY BOX TO GRADE

HKA
Harlan Krusemark - Architect
4415 Cowell Road, Suite 230
Concord, CA 94521
Tel: 925.681.1905
Fax: 925.681.1906

LICENSED ARCHITECT HARLAN KRUSEMARK No. C23820 Exp. 9/30/10 STATE OF CALIFORNIA

MILANI & Associates
3480 Buskirk Avenue, Suite 225
Pleasant Hill, CA 94523
Tel: 925.941.1490
Fax: 925.941.1496

LICENSED CIVIL ENGINEER MARY GRACE HOWARD 42020 Expires: 6-30-01 STATE OF CALIFORNIA

Revisions	Date
△	
△	
△	
△	
△	
△	

HAWKINS SCHOOL
(INCREMENTS #1 & #2)

475 Darlene Lane
Tracy, CA 95377

Jefferson School District
7500 West Linne Road
Tracy, CA 95304

DSA FILE NO. 39-39
IDENTIFICATION STAMP
DIVISION OF THE STATE ARCHITECT
APPL 02 -102225
AC HA FLS NW SS
DATE 5/13 & 7/30

Sheet Title:

GRADING AND DRAINAGE PLAN

Printing Date / Purpose:

-

Scale: 1"=20'
Project Number: 9903.00
Sheet Number:

C2.1

of Sheets

FILE:

COPYRIGHT © 2000 HARLAN KRUSEMARK - ARCHITECT (HKA) THESE DRAWINGS ARE PROPRIETARY DOCUMENTS OF HKA AND ARE NOT TO BE DISTRIBUTED, PUBLISHED OR REPRODUCED WITHOUT WRITTEN PERMISSION OF HKA.

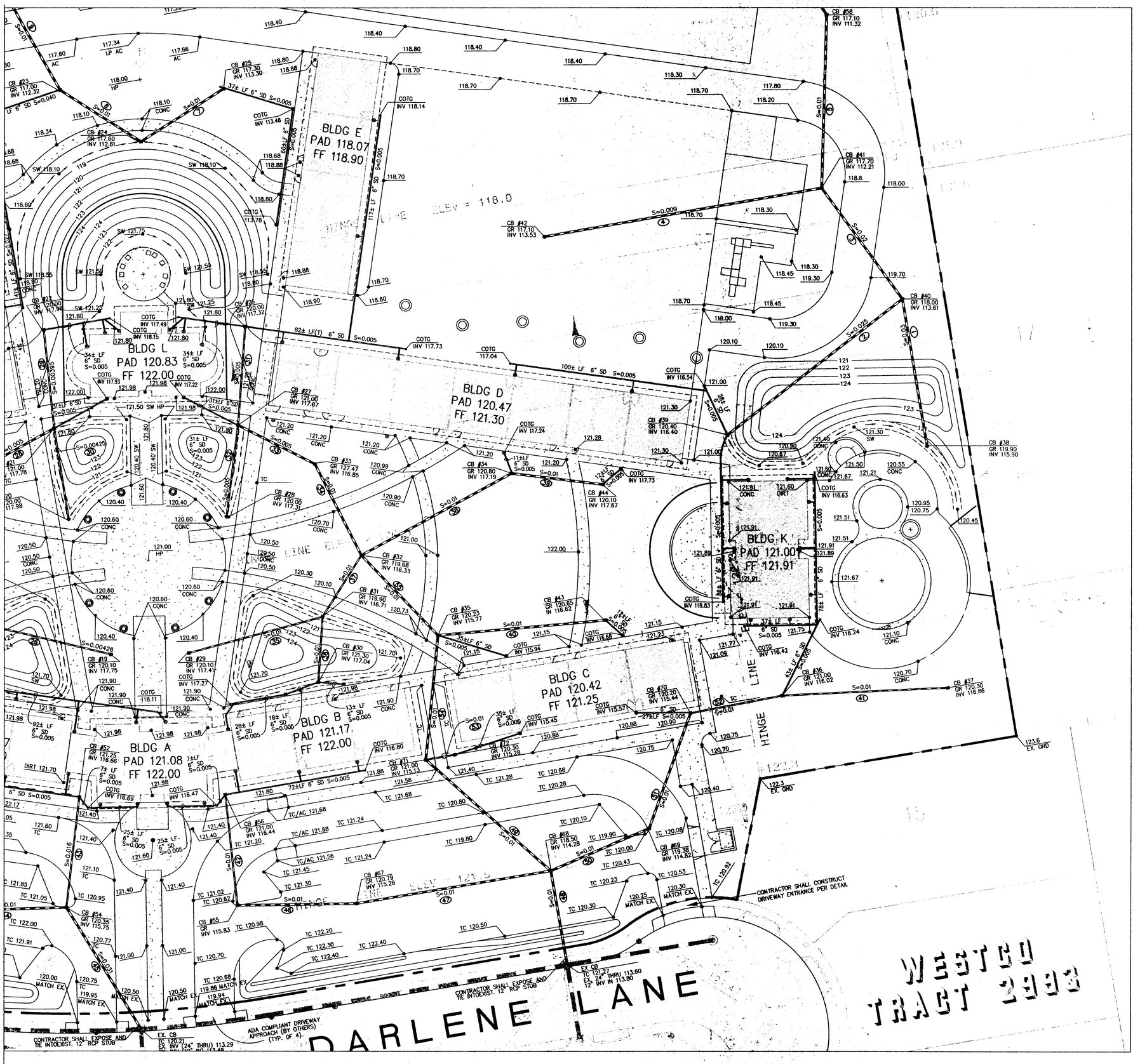

SD LINE TABLE					
DWG	LINE #	CB# TO CB#	PIPE SIZE	LENGTH	BEARING
2.2	1	38 – 40	12" SD	76.23	S00°28'51"E
2.2	2	39 – 40	12" SD	112.83	S61°56'33"W
2.2	3	40 – 41	12" SD	69.97	N25°47'33"W
2.2	4	42 – 41	12" SD	142.92	S89°59'54"W
2.2	5	41 – 58	12" SD	88.53	N11°36'02"E
2.0	6	58 – EX CB	12" SD	264.85	S23°28'58"E
2.2	7	25 – 24	12" SD	49.95	N67°05'35"E
2.1	8	24 – 23	12" SD	48.90	S47°23'34"E
2.0	9	23 – EX CB	12" SD	167.57	S19°36'28"E
2.0	10	59 – EX CB	12" SD	299.35	N69°32'10"E
2.1	11	10 – 59	12" SD	130.97	N27°46'34"W
2.1	12	11 – 10	12" SD	113.90	S82°24'39"W
2.1	13	45 – EX CB	12" SD	24.22	N17°02'57"E
2.1	14	46 – 45	12" SD	97.83	S86°24'22"E
2.1	15	51 – 46	12" SD	56.94	S21°21'38"W
2.1	16	47 – 46	12" SD	60.45	N62°32'47"W
2.1	17	48 – 47	12" SD	58.13	S71°03'53"W
2.1	18	49 – 48	12" SD	32.71	S31°15'07"W
2.1	19	50 – 49	8" SD	15.00	N72°00'00"W
2.1	20	12 – 49	12" SD	67.57	S02°52'24"E
2.1	21	13 – 12	12" SD	38.57	S01°55'04"W
2.1	22	16 – 13	12" SD	49.73	S81°49'57"E
2.1	23	14 – 13	12" SD	38.21	S16°09'57"W
2.1	24	17 – 16	8" SD	37.15	N23°58'58"W
2.1	25	18 – 17	8" SD	33.51	N04°21'04"E
2.1	26	19 – 17	8" SD	70.38	N66°40'00"W
2.1	27	15 – 16	12" SD	52.20	N34°52'06"E
2.1	28	21 – 15	12" SD	43.74	S71°03'55"W
2.1	29	22 – 21	– SD	50.62	S03°58'01"W
2.1	30	20 – 21	– SD	46.99	N00°54'58"E
2.2	31	26 – 27	6" SD	50.62	S14°01'59"W
2.2	32	28 – 27	6" SD	46.99	N17°05'02"E
2.1	33	27 – 33	– SD	43.74	N53°03'55"W
2.2	34	33 – 32	12" SD	52.27	S16°55'02"E
2.2	35	29 – 31	8" SD	70.38	S84°40'00"W
2.2	36	30 – 31	8" SD	33.51	N13°38'56"E
2.2	37	31 – 32	8" SD	37.15	S42°06'50"W
2.2	38	34 – 32	12" SD	87.04	N71°13'23"E
2.2	39	44 – 34	12" SD	47.00	S72°54'52"E
2.2	40	43 – 35	12" SD	85.63	N85°09'16"W
2.2	41	37 – 36	8" SD	84.13	N82°48'05"W
2.2	42	56 – 55	8" SD	56.96	S03°44'35"W
2.1	43	52 – 54	8" SD	56.86	S16°36'43"W
2.1	44	53 – 54	12" SD	59.59	S81°35'29"E
2.1	45	54 – EX CB	12" SD	72.87	S21°29'57"E
2.2	46	55 – 67	12" SD	60.65	S80°59'02"E
2.2	47	67 – 68	12" SD	100.00	S89°37'40"E
2.2	48	68 – EX CB	12" SD	48.75	N00°00'00"W
2.2	49	71 – 68	12" SD	85.28	N38°13'23"W
2.2	50	69 – 68	12" SD	54.53	S76°35'30"W
2.2	51	70 – 69	12" SD	62.41	S29°27'11"W
2.2	52	36 – 70	8" SD	47.54	S89°02'45"W
2.2	53	72 – 71	8" SD	15.00	N90°00'00"W
2.2	54	35 – 71	12" SD	63.89	S15°28'46"W
2.2	55	32 – 35	12" SD	56.48	N33°34'26"W
2.1	56	57 – 45	8" SD	42.25	S44°32'57"W
2.1	57	66 – 51	12" SD	24.25	S23°41'49"E
2.1	58	7 – 66	12" SD	31.56	S25°38'15"W
2.1	59	8 – 7	8" SD	13.55	N61°06'07"W
2.1	60	6 – 7	8" SD	23.84	S03°20'44"W
2.1	61	5 – 4	8" SD	26.04	S15°15'07"W
2.1	62	4 – 3	8" SD	13.99	S87°56'56"W
2.1	63	2 – 13	12" SD	57.52	S81°08'30"E
2.1	64	60 – 45	12" SD	65.70	S46°37'10"E
2.1	65	1 – 60	12" SD	117.94	S22°35'45"W
2.0	66	62 – 60	12" SD	166.61	N12°34'46"W
2.0	67	61 – 60	12" SD	201.71	S86°49'53"E
2.0	68	63 – 64	– SD	175.40	S86°43'20"W
2.0	69	64 – SDMH#1	– SD	106.23	N00°00'44"W
2.0	70	65 – SDMH#1	– SD	70.59	N00°00'44"W
2.0	71	SDMH#1–EX CB	– SD	14.63	N89°59'16"E
2.1	72	3 – 2	8" SD	48.46	RADIUS=60.00

LEGEND

- ROOF LEADER DOWNSPOUT
- COTG INSTALL CLEANOUT IN F14 CHRISTY BOX TO GRADE

HKA
Harlan Krusemark - Architect
4415 Cowell Road, Suite 230
Concord, CA 94521
Tel: 925.681.1905
Fax: 925.681.1906

LICENSED ARCHITECT HARLAN KRUSEMARK No. C2820 Exp. 9/30/10 STATE OF CALIFORNIA

MILANI & Associates
3480 Buskirk Avenue, Suite 225
Pleasant Hill, CA 94523
Tel: 925.941.1490
Fax: 925.941.1496

LICENSED CIVIL ENGINEER MARY GRACE HOPPER No. 50209 Expires: 6-30-01 STATE OF CALIFORNIA

Revisions	Date

HAWKINS SCHOOL
(INCREMENTS #1 & #2)

475 Darlene Lane
Tracy, CA 95377

Jefferson School District
7500 West Linne Road
Tracy, CA 95304

DSA FILE NO. 39-39
IDENTIFICATION STAMP
DIVISION OF THE STATE ARCHITECT
APPL 02 -102225
AC PL PLS SS
DATE AUG 2 4 2001

Sheet Title:

GRADING AND DRAINAGE PLAN

Printing Date / Purpose:

Scale: 1"=20'
Project Number: 9903.00
Sheet Number:

C2.2

of Sheets

FILE

COPYRIGHT © 2000 HARLAN KRUSEMARK - ARCHITECT (HKA) THESE DRAWINGS ARE PROPRIETARY DOCUMENTS OF HKA AND ARE NOT TO BE DISTRIBUTED, PUBLISHED OR REPRODUCED WITHOUT WRITTEN PERMISSION OF HKA.

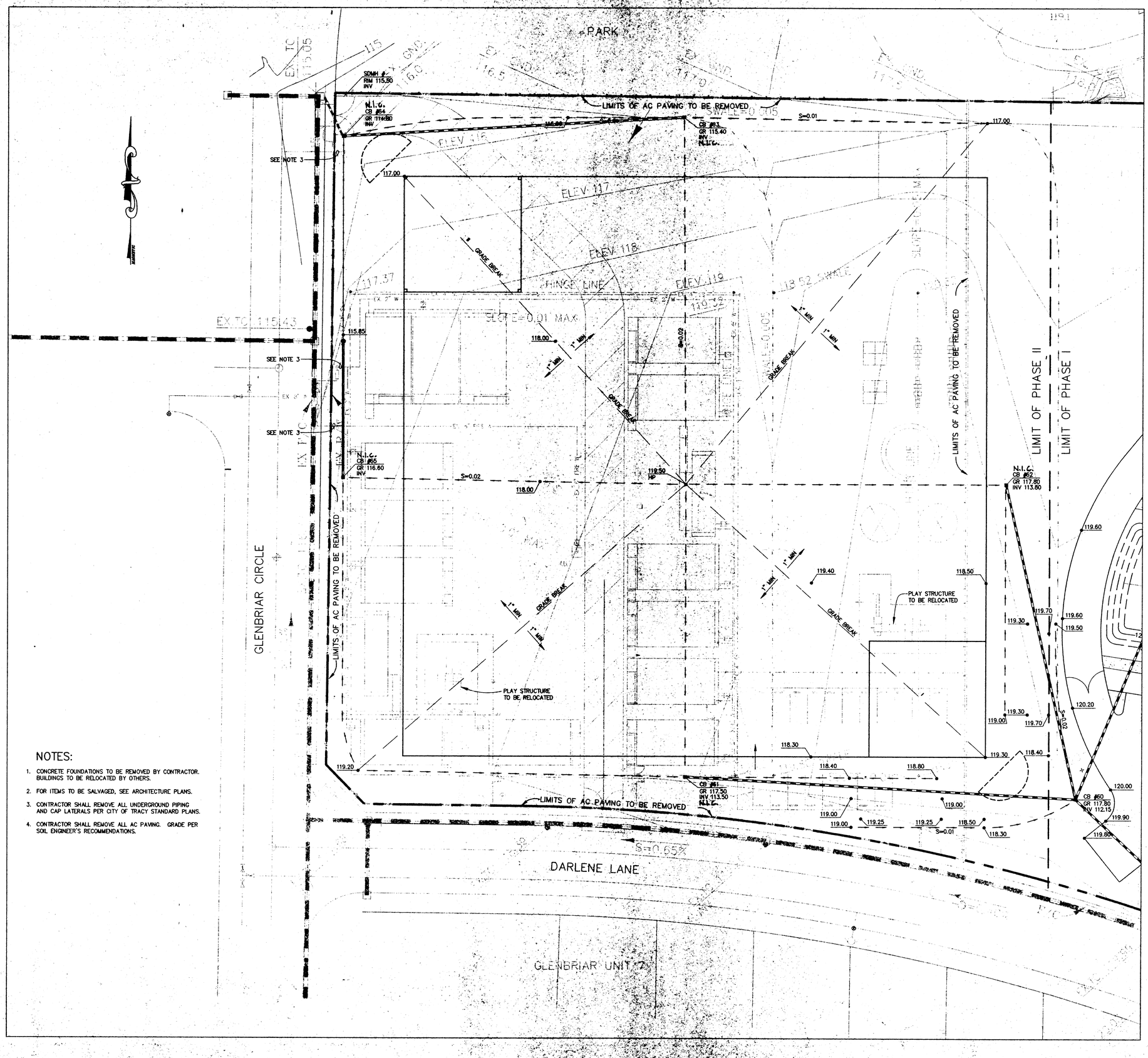

NOTES:

1. CONCRETE FOUNDATIONS TO BE REMOVED BY CONTRACTOR. BUILDINGS TO BE RELOCATED BY OTHERS.
2. FOR ITEMS TO BE SALVAGED, SEE ARCHITECTURE PLANS.
3. CONTRACTOR SHALL REMOVE ALL UNDERGROUND PIPING AND CAP LATERALS PER CITY OF TRACY STANDARD PLANS.
4. CONTRACTOR SHALL REMOVE ALL AC PAVING. GRADE PER SOIL ENGINEER'S RECOMMENDATIONS.

HKA
Harlan Krusemark - Architect
4415 Cowell Road, Suite 230
Concord, CA 94521
Tel: 925.681.1905
Fax: 925.681.1906

LICENSED ARCHITECT HARLAN KRUSEMARK No. C23883 Exp. 9/30/10 STATE OF CALIFORNIA

MILANI & Associates
3480 Buskirk Avenue, Suite 225
Pleasant Hill, CA 94523
Tel: 925.941.1490
Fax: 925.941.1496

LICENSED CIVIL ENGINEER HANS GRACE BOSTWICK 30203 Expires: 6-30-01 STATE OF CALIFORNIA

Revisions	Date

HAWKINS SCHOOL
(INCREMENTS #1 & #2)
(INCLUDED FOR INFORMATION ONLY)
475 Darlene Lane
Tracy, CA 95377

Jefferson School District
7500 West Linne Road
Tracy, CA 95304

DSA FILE NO. 39-39
IDENTIFICATION STAMP
DIVISION OF THE STATE ARCHITECT
APPL 02 -102225
AC____ FLS____ SS____
DATE _____

Sheet Title:
PHASE 2
GRADING PLAN

Printing Date / Purpose:

Scale: 1"=20'
Project Number: 9903.00
Sheet Number:
C2.3
of Sheets

FILE:

COPYRIGHT © 2000 HARLAN KRUSEMARK - ARCHITECT (HKA) THESE DRAWINGS ARE PROPRIETARY DOCUMENTS OF HKA AND ARE NOT TO BE DISTRIBUTED, PUBLISHED OR REPRODUCED WITHOUT WRITTEN PERMISSION OF HKA.

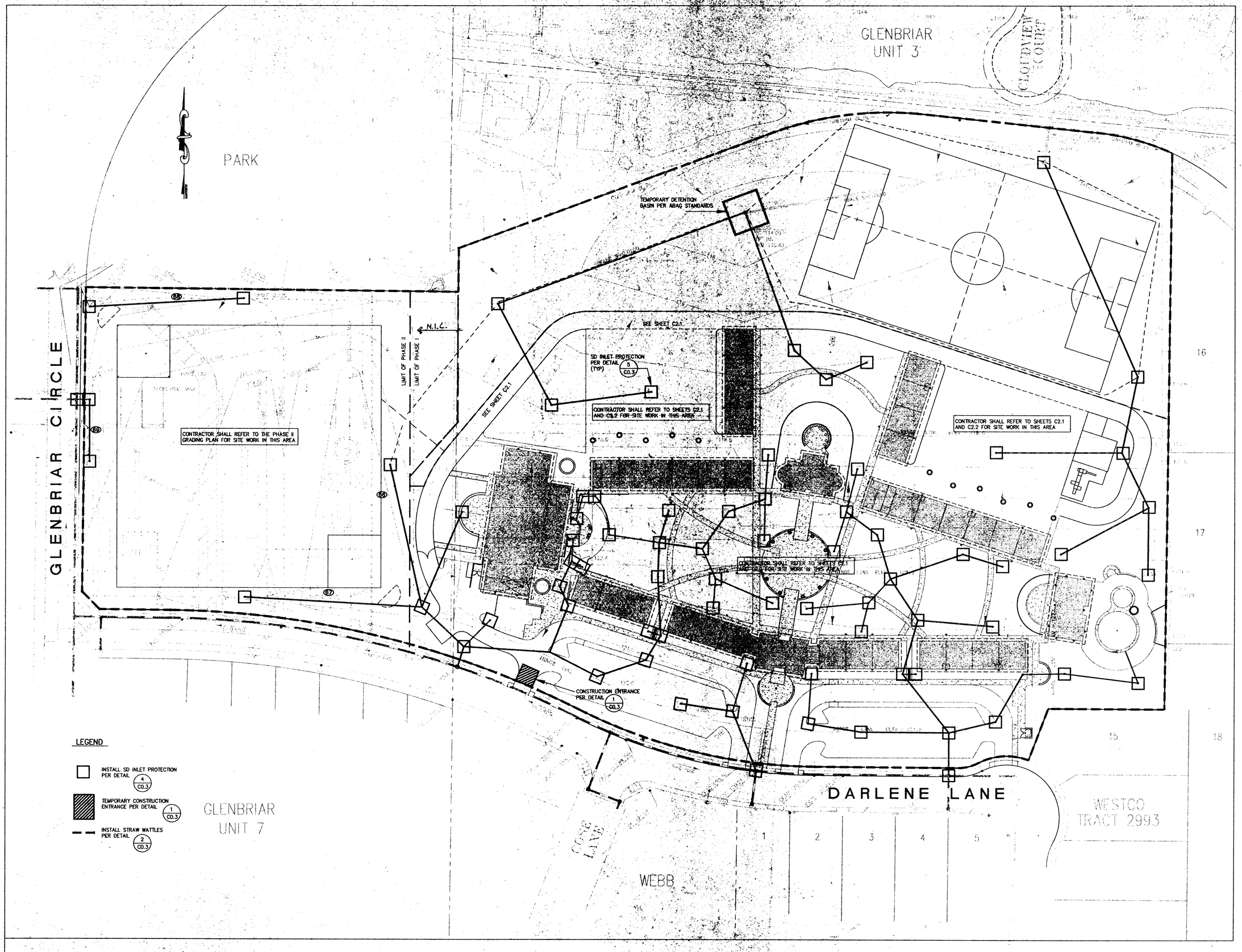

HKA
Harlan Krusemark - Architect
4415 Cowell Road, Suite 230
Concord, CA 94521
Tel: 925.681.1905
Fax: 925.681.1906

& Associates
MILANI
3480 Buskirk Avenue, Suite 225
Pleasant Hill, CA 94523
Tel: 925.941.1490
Fax: 925.941.1496

Revisions	Date
△	
△	
△	
△	
△	
△	

HAWKINS SCHOOL
(INCREMENTS #1 & #2)

475 Darlene Lane
Tracy, CA 95377

Jefferson School District
7500 West Linne Road
Tracy, CA 95304

DSA FILE NO. 39-39
IDENTIFICATION STAMP
DIVISION OF THE STATE ARCHITECT
APPL 02 -102225
AC ARM R.S. SS
DATE AUG 2 4 2000

Sheet Title:
EROSION CONTROL PLAN

Printing Date / Purpose:
-

Scale: 1"=40'
Project Number: 9903.00
Sheet Number:
C3.0
of Sheets
FILE:

COPYRIGHT © 2000 HARLAN KRUSEMARK - ARCHITECT (HKA) THESE DRAWINGS ARE PROPRIETARY DOCUMENTS OF HKA AND ARE NOT TO BE DISTRIBUTED, PUBLISHED OR REPRODUCED WITHOUT WRITTEN PERMISSION OF HKA.

ABBREVIATIONS

AC	ASPHALTIC CONCRETE
AD	AREA DRAIN
AGG	AGGREGATE
CB	CATCH BASIN
CONC	CONCRETE
CJ	CONSTRUCTION JOINT
CL	CHAIN LINK
CLR	CLEAR
CONT	CONTINUOUS
CP	CENTER POINT
(E)	EXISTING
EJ	EXPANSION JOINT
FG	FINISHED GRADE
FH	FIRE HYDRANT
GALV	GALVANIZED
HC	HANDICAP
HDR	HEADER
HT	HEIGHT
JT	JOINT
LT	LIGHT
LU	LITTER UNIT
MAX	MAXIMUM
MED	MEDIUM
MH	MAN HOLE
MIN	MINIMUM
MTL	METAL
NIC	NOT IN CONTRACT
NTS	NOT TO SCALE
OC	ON CENTER
OCEW	ON CENTER EACH WAY
LBS/SQ FT	POUNDS PER SQUARE FOOT
PSI	POUNDS PER SQUARE INCH
PVC	POLY VINYL CHLORIDE
PPVC	PERFORATED POLY VINYL CHLORIDE
R	RADIUS
RPT	RADIUS CENTER POINT
RWD	REDWOOD
SIM	SIMILAR
SM	SCORE MARK
SPD	SPREAD
ST STL	STAINLESS STEEL
TS	TUBULAR STEEL
Typ	TYPICAL
WM	WATER METER
WWM	WELDED WIRE MESH
W/	WITH

LEGEND:

- KEYED CONSTR. JT. — 4 / L7.1
- SCORE MARK UNLESS INDICATED EJ/CJ — 5 / L7.1
- CONCRETE PAVING FINISH A — 3 / L7.1
- CONCRETE PAVING FINISH B — 3 / L7.1
- EXPANSION JOINT — 5 / L7.1
- CONCRETE PAVING FINISH D — 3 / L7.1
- CONCRETE PAVING FINISH C — 3 / L7.1
- AC PAVING — 6 / L7.1
- RESILIENT PAVING TILES — 8 / L7.1
- CONCRETE SEAT WALL — 7 / L7.1
- BICYCLE RACK (2 REQ)
- METAL TREE GRATE w/ GUARD — 14 / L7.1
- LITTER UNIT
- PPVC — PERFORATED P.V.C. DRAIN PIPE — 10 / L7.1
- PVC — P.V.C. DRAIN PIPE

SCHEDULE OF SITE FURNISHINGS AND FINISHES:

ITEM	MFR.	CATALOG NO.	MATERIAL	FINISH	COLOR	NOTES
CONCRETE PAVING FINISH A	DAVIS COLORS 800/800-6856	INTEGRAL COLOR	INTEGRAL COLOR	MEDIUM BROOM	*DUNE *(EQUAL COLOR)	
CONCRETE PAVING FINISH B	MORGAN MASONRY 510/837-7296	TERI BEACH PEBBLES *3 lbs/SF	1/4"ø WATER WORN PEBBLES	SEEDED EXP AGG		
CONCRETE PAVING FINISH C	DAVIS COLORS 800/800-6856	INTEGRAL COLOR	INTEGRAL COLOR	MEDIUM BROOM	*RUSTIC BROWN	
CONCRETE PAVING FINISH D	DAVIS COLORS 800/800-6856	INTEGRAL COLOR	INTEGRAL COLOR	MEDIUM BROOM	*GREEN SLATE	
BICYCLE RACK	TIMBERFORM 925/837-4440	CYCLOOPS 2170-11	4.5"OD STL PIPE	POWDER COAT MTL	REGAL BLUE	
METAL TREE GRATE	NEENAH URBAN ACCESSORIES	R-8830-A KIVA	4' DIA CAST IRON	NATURAL		
METAL TREE GUARD	NEENAH URBAN ACCESSORIES	STYLE B ECO	MILD SREEL	PAINTED	MATTE BLACK	
~~PLASTIC WOOD~~	~~EAGLEBROOK PRODUCTS 510/588-2680~~	~~DURA WOOD~~	~~RECYCLED PLASTIC LUMBER~~	~~TEXTURE COAT SURFACE~~	~~WEATHERED REDWOOD~~	
LITTER UNITS	STREETSMART DESIGNS 800/245-3006	SERIES LCR-24 W/ LINER & SWING DOORS	12 GAUGE STEEL	NICKLAD COATING	MIDNIGHT BLUE	PROVIDED & INSTALLED BY OWNER
PLAY STRUCTURE NO. 1	TIMBERFORM-2	4677M CUSTOM 1/2ø DW40, #1638-4-T#2-M, #1679-4-73-TP2-M, & 1669-14-T#2	- - - - - - - -	- - -	- - -	
PLAY STRUCTURE NO. 2	TIMBERFORM-2	4682 CUSTOM	- - - - - - - -	- - -	- - -	
SAND/WATER PANEL	LANDSCAPE STRUCTURES 707/526-4800	111297A	--	POWDER COAT METAL	--	
RESILIENT PAVING TILES	SURFACE AMERICA 415/826-9595	PLAY BOUND TILE	POROUS, DUAL DENS. RUBBER COMPOUND TILES	-	BLUE	
PLAY AREA SAND	SHELTON TRANSFER 408/432-9040	2-16 SAND	CLEAN, WATER-WORN BEACH SAND W/ ROUND PARTICLES			
~~HOME PLATE~~	~~HOLLYWOOD 800/950-1844~~	~~*10840~~	~~STANCHION MOUNTED~~			
~~PITCHING RUBBER~~	~~HOLLYWOOD 800/950-1844~~	~~*10880~~				
TETHERBALL POLE	STEELCRAFT	TBPGB	2.375"OD x 1/16" GALV STL	GALVANIZED		
GROUND SLEEVE TOP RING ROPE/BALL	818/798-7401		GALV STL W/LOCKING	GALVANIZED	-	SEE ARCH DRAWINGS A1.2 FOR LOCATIONS
~~BASKETBALL GOAL~~ ~~HEAVY DUTY 6' OFFSET~~	~~LANDSCAPE STRUCTURES 707/526-4800~~	~~100073F~~	~~5.56"OD GALV STL FAN BOARD NYLON NET~~	~~GALVANIZED~~	-	~~SEE ARCH DRAWINGS A1.2 FOR LOCATIONS~~
BASKETBALL GOAL ADJUSTABLE 6'OFFSET	STEELCRAFT 818/798-7401	1256-05 W/HD-600	5.56"OD GALV STL FAN BOARD NYLON NET	GALVANIZED	-	SEE ARCH DRAWINGS A1.2 FOR LOCATIONS
~~BASEBALL BACKSTOP~~	~~STEELCRAFT 818/798-7401~~	~~AB-88P ARCH BACKSTOP~~	~~GALV. STEEL~~	~~GALVANIZED~~	-	
SWINGS	STEELCRAFT 818/798-7401	3196	GALV. STL	GALVANIZED	-	SEE ARCH DRAWINGS A1.2 FOR LOCATIONS
JR TEAM CLIMBER	STEELCRAFT 818/798-7401	JCT-1011	GALV. STL	GALVANIZED	-	SEE ARCH DRAWINGS A1.2 FOR LOCATIONS
VOLLEYBALL SLEEVES, STDS, NETS	STEELCRAFT 818/798-7401	350-E VBP3-BG & BGC NVC-32	GALV. STL	GALVANIZED	-	SEE ARCH DRAWINGS A1.2 FOR LOCATIONS
BALL WALL	STEELCRAFT 818/798-7401	BW12-8B	MDO PLYWD GALV. STL	PAINTED	EW-2	SEE ARCH DRAWINGS A1.2 FOR LOCATIONS

GENERAL NOTES:

1. ALL DIMENSIONS, UNLESS OTHERWISE INDICATED, ARE TO FACE OF WALL OR STRUCTURE.
2. INSTALL EXPANSION JOINTS WITHOUT DOWELS IN CONC PAVING ABUTTING WALLS, BUILDINGS AND/OR OTHER VERTICAL STRUCTURES.
3. REFER TO IRRIGATION PLANS FOR LEGENDS & ADDITIONAL NOTES.

GRADING NOTES:

1. REFER TO CIVIL DRAWINGS FOR SITE GRADING.
2. SLOPE UNIFORMLY BETWEEN GIVEN ELEVATIONS UNLESS OTHERWISE INDICATED MAKE TRANSITIONS BETWEEN CHANGES IN VERTICAL GRADIENT SMOOTH & FLOWING, WITH NO ABRUPT CHANGES IN PLANE.

NUMBERED NOTES:

1. REFER TO ARCHITECTURAL DRAWINGS
2. REFER TO CIVIL DRAWINGS

PLANTING NOTES:

1. FURNISH AND INSTALL SHREDDED 'WALK-ON' BARK MULCH 3 INCHES DEEP OVER ALL SHRUB & GROUNDCOVER AREAS, AND OTHER AREAS DESIGNATED ON THE DRAWINGS; WHERE EROSION CONTROL MATTING OCCURS, INSTALL MULCH ON TOP OF MATTING.
2. INSTALL EROSION CONTROL MATTING ON ALL 2:1 AND STEEPER SLOPES.
3. HYDROSEED ALL GROUND AREAS DISTURBED BY CONSTRUCTION WORK THAT ARE NOT INDICATED TO BE PLANTED WITH SHRUBS AND/OR GROUNDCOVER, WITH THE FOLLOWING SEED MIX:

   LOLIUM MULTIFLORUM (ANNUAL RYEGRASS) AT THE RATE OF 2.5 POUNDS PER ACRE OF AREA.

5. INSTALL ROOT BARRIERS AROUND ALL TREES WITHIN 5 FEET OF PAVING AND/OR OTHER STRUCTURES

PLANTING LEGEND:

- TREE
- SHRUB
- TURF
- GROUNDCOVER

GAL	GALLON
CONT	CONTAINER
HT	HEIGHT
SPD	SPREAD
CAL	CALIPER
FG	FLAT GROWN
M-T	MULTI-TRUNK

HKA
Harlan Krusemark - Architect
1330 Arnold Drive, Suite 147
Martinez, CA 94553
Tel: 925.228.9989
Fax: 925.603.7734

LICENSED ARCHITECT HARLAN KRUSEMARK No. C2833 Exp. 9/30/01 STATE OF CALIFORNIA

LICENSED LANDSCAPE ARCHITECT DONALD MITCHELL KELLER C-1060 Exp. Aug 31,2000 STATE OF CALIFORNIA

KELLER MITCHELL & CO.
Landscape Architecture
111 New Montgomery Street, Suite 303
San Francisco, CA 94105
415/546-9987 Fax 415/546-9960

Revisions	Date

HAWKINS SCHOOL
(INCREMENT #1)

Darlene Lane
Tracy, CA 95376

Jefferson School District
7500 West Linne Road
Tracy, CA 95376

DSA FILE NO. 39-39
IDENTIFICATION STAMP
DIVISION OF THE STATE ARCHITECT
APPL02
AC FLS SS
DATE AUG 2 4 2000

Sheet Title:
LANDSCAPE LEGENDS, NOTES & ABBREVIATIONS

Printing Date / Purpose:
5/2/00 OSA
8/18/00

Scale:
Project Number: 9903.00
Sheet Number:

L1.0

of Sheets

FILE:

COPYRIGHT © 2000 HARLAN KRUSEMARK - ARCHITECT (HKA) THESE DRAWINGS ARE PROPRIETARY DOCUMENTS OF HKA AND ARE NOT TO BE DISTRIBUTED, PUBLISHED OR REPRODUCED WITHOUT WRITTEN PERMISSION OF HKA.

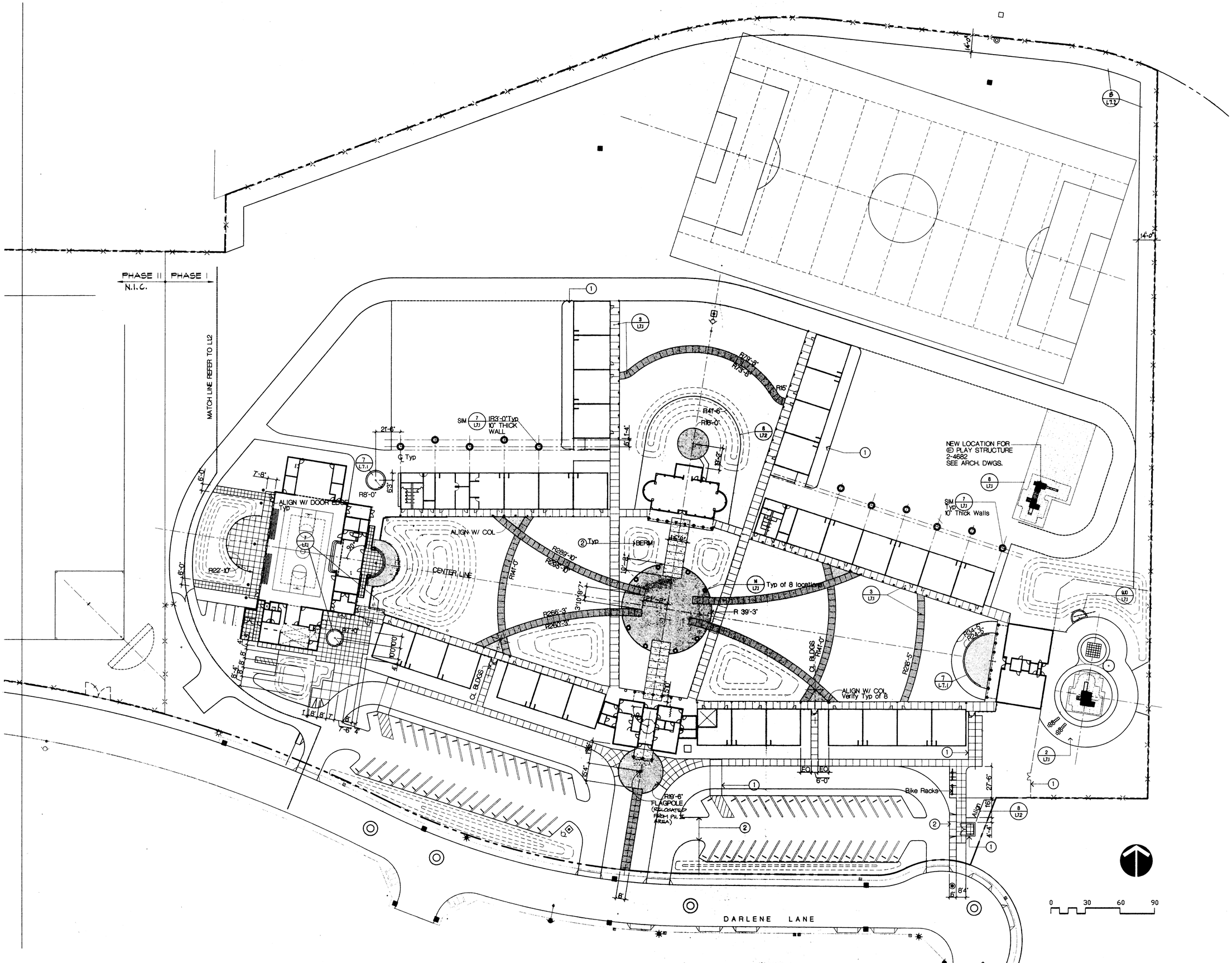

HKA
Harlan Krusemark - Architect
1330 Arnold Drive, Suite 147
Martinez, CA 94553
Tel: 925.228.9989
Fax: 925.603.7734

REGISTERED ARCHITECT No. 12383 Exp. 9/30/8 STATE OF CALIFORNIA

REGISTERED LANDSCAPE ARCHITECT C-1050 Exp. Aug 31,2001 STATE OF CALIFORNIA

KELLER MITCHELL & CO.
Landscape Architecture
111 New Montgomery Street, Suite 303
San Francisco, CA 94105
415/546-9967 Fax 415/546-9960

Revisions	Date

HAWKINS SCHOOL
(INCREMENT #1)

Darlene Lane
Tracy, CA 95376

Jefferson School District
7500 West Linne Road
Tracy, CA 95376

DSA FILE NO. 39-39
IDENTIFICATION STAMP
DIVISION OF THE STATE ARCHITECT
APPL02 _____
AC ___ FLS ___ SS ___
DATE AUG. 2 4 2000

Sheet Title:

LANDSCAPE
DIMENSION
PLAN EAST

Printing Date / Purpose:
5/2/00 DSA
8/18/00

Scale: 1-30'-0"
Project Number: 9903.00
Sheet Number:

L1.1
of Sheets

FILE:

COPYRIGHT © 2000 HARLAN KRUSEMARK - ARCHITECT (HKA) THESE DRAWINGS ARE PROPRIETARY DOCUMENTS OF HKA AND ARE NOT TO BE DISTRIBUTED, PUBLISHED OR REPRODUCED WITHOUT WRITTEN PERMISSION OF HKA.

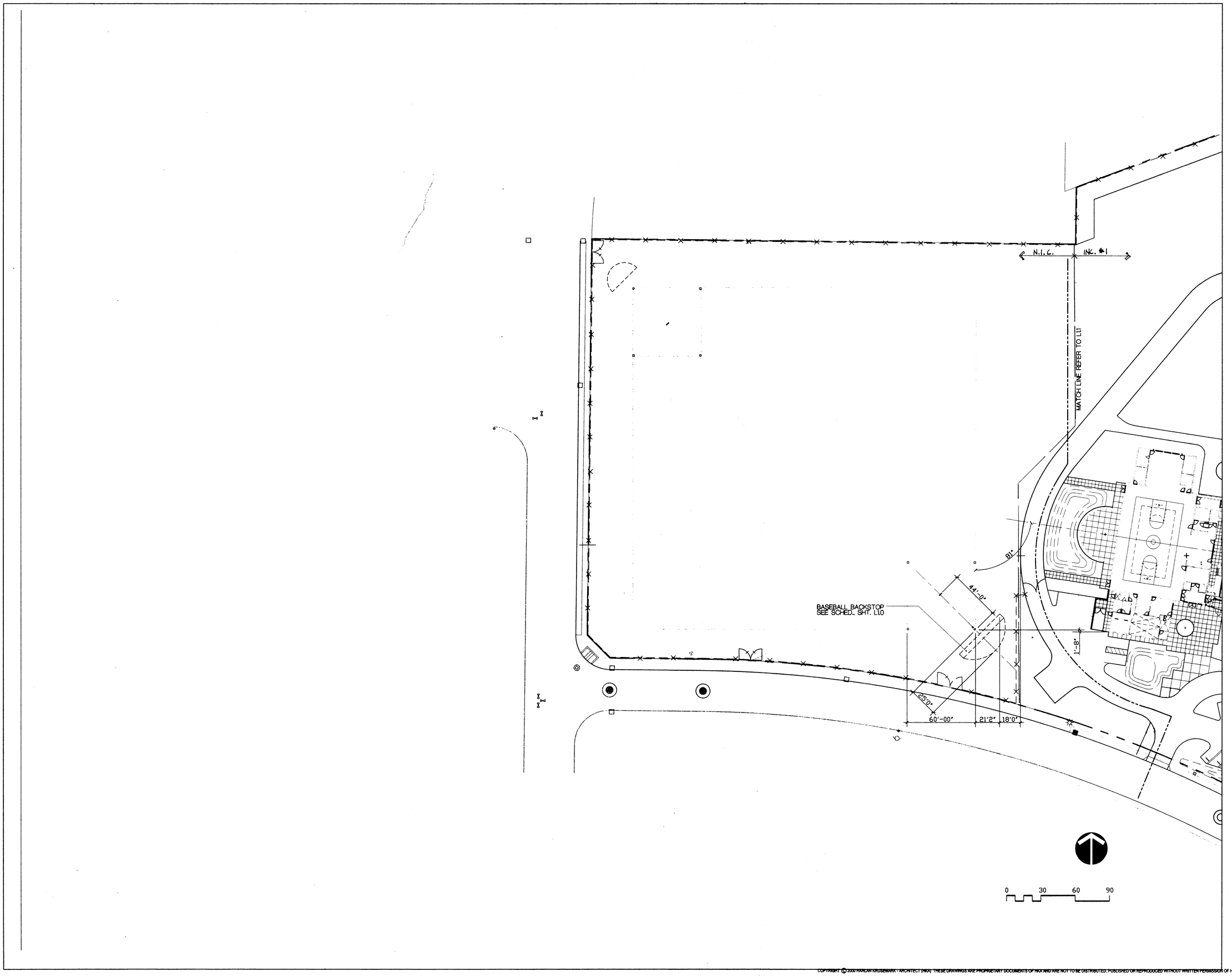

HKA
Harlan Krusemark - Architect
1330 Arnold Drive, Suite 147
Martinez, CA 94553
Tel: 925.228.9989
Fax: 925.603.7734

KELLER MITCHELL & CO.
Landscape Architecture
111 New Montgomery Street, Suite 303
San Francisco, CA 94105
415/546-9987 Fax 415/546-9960

Revisions	Date
△	
△	
△	
△	
△	
△	

HAWKINS SCHOOL
(INCREMENT #1)

Darlene Lane
Tracy, CA 95376

Jefferson School District
7500 West Linne Road
Tracy, CA 95376

DSA FILE NO. 39-39
IDENTIFICATION STAMP
DIVISION OF THE STATE ARCHITECT
APPL02
AC FLS SS
DATE AUG 2 4 2000

Sheet Title:

LANDSCAPE
DIMENSION PLAN
WEST

Printing Date / Purpose:
5/2/00 OSA
8/18/00

Scale: 1"-30'-0"
Project Number: 9903.00
Sheet Number:

L1.2 of Sheets

FILE:

COPYRIGHT © 2000 HARLAN KRUSEMARK - ARCHITECT (HKA) THESE DRAWINGS ARE PROPRIETARY DOCUMENTS OF HKA AND ARE NOT TO BE DISTRIBUTED, PUBLISHED OR REPRODUCED WITHOUT WRITTEN PERMISSION OF HKA.

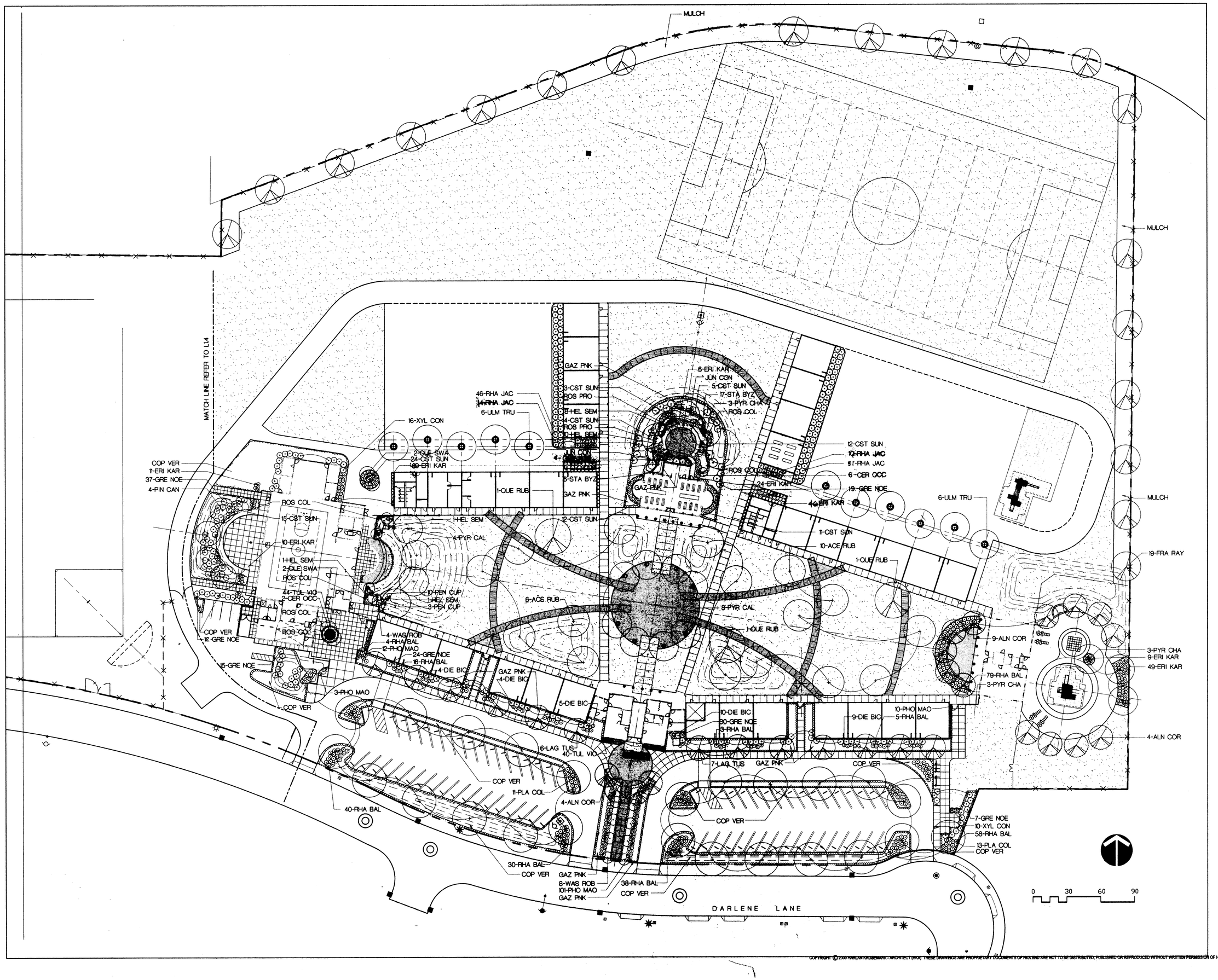

HKA

Harlan Krusemark - Architect
1330 Arnold Drive, Suite 147
Martinez, CA 94553
Tel: 925.228.9989
Fax: 925.603.7734

REGISTERED ARCHITECT HARLAN KRUSEMARK No. C23833 Exp. 9/30/01 STATE OF CALIFORNIA

REGISTERED LANDSCAPE ARCHITECT RONALD WILCOX C-1250 Exp. Aug 31,2000 STATE OF CALIFORNIA

KELLER MITCHELL & CO.
Landscape Architecture
111 New Montgomery Street, Suite 303
San Francisco, CA 94105
415/546-9987 Fax 415/546-9950

Revisions	Date

HAWKINS SCHOOL
(INCREMENT #1)

Darlene Lane
Tracy, CA 95376

Jefferson School District
7500 West Linne Road
Tracy, CA 95376

DSA FILE NO. 39-39
IDENTIFICATION STAMP
DIVISION OF THE STATE ARCHITECT
APPL.02 _____
AC ___ PLS ___ SS ___
DATE AUG 4 2000

Sheet Title:

LANDSCAPE
PLANTING PLAN
EAST

Printing Date / Purpose:
5/2/00 DSA
8/18/00
2/23/01

Scale: 1"=30'-0"
Project Number: 9903.00
Sheet Number:

L1.3 of Sheets

FILE:

COPYRIGHT © 2000 HARLAN KRUSEMARK - ARCHITECT (HKA). THESE DRAWINGS ARE PROPRIETARY DOCUMENTS OF HKA AND ARE NOT TO BE DISTRIBUTED, PUBLISHED OR REPRODUCED WITHOUT WRITTEN PERMISSION OF HKA.

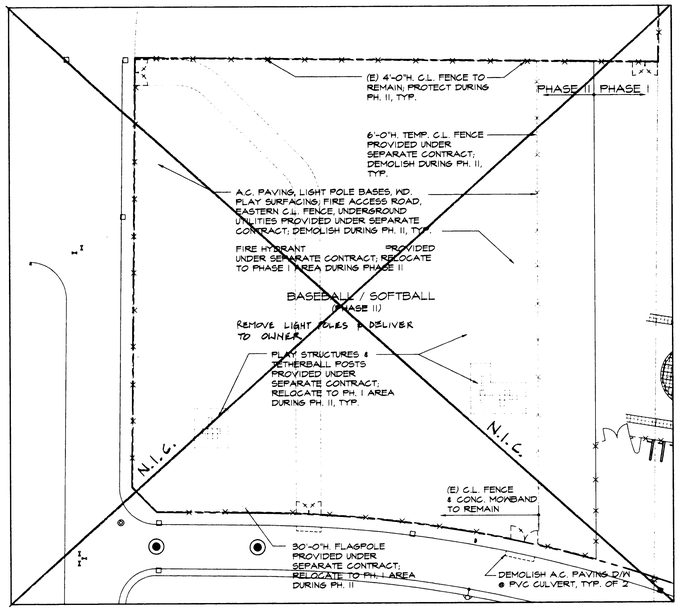

2 A1.1 DEMOLITION AND SALVAGE PLAN (N.I.C.) PHASE II

1" = 50'-0"

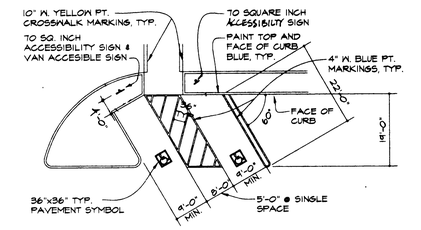

NOTES

1. SIGN SHALL CONFORM TO STATE OF CALIFORNIA STANDARD SPECIFICATIONS FOR R-99.
2. SIGNS SHALL BE MOUNTED ON 2"X2" GALV. TUBE STEEL POSTS. LOCATE AS INDICATED. MINIMUM HEIGHT FROM BOTTOM OF SIGN TO GRADE IS 80" (6'-8").
3. THE SIGN SHALL BE INSTALLED IMMEDIATELY ADJACENT TO AND VISIBLE FROM EACH STALL OR SPACE.
4. ACCESSIBLE PARKING SPACES SHALL BE LOCATED SO AS TO MINIMIZE THE NEED FOR DISABLED PERSONS TO PASS BEHIND PARKED VEHICLES IN PROCEEDING FROM THEIR VEHICLE TO ACCESSIBLE ROUTES.
5. INSTALL "UNAUTHORIZED VEHICLES...WILL BE TOWED." SIGN AT ENTRANCE TO ALL PARKING LOTS WITH ACCESSIBLE PARKING SPACES.
6. REFER TO SHT. A-9.3 AND SPEC. SEC.N 10422 FOR ADD'L. SIGNAGE INFO.

3 A1.1 ACCESSIBLE PARKING STALLS

1/16" = 1'-0"

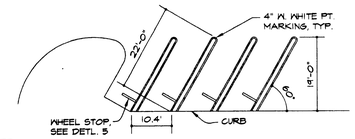

4 A1.1 TYPICAL PARKING STALLS

1/16" = 1'-0"

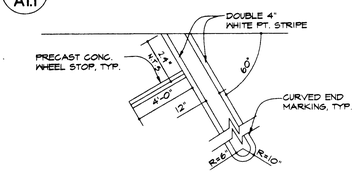

5 A1.1 WHEELSTOP DETAIL

1/4" = 1'-0"

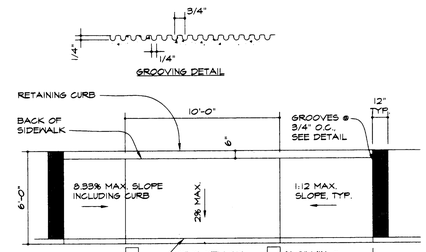

THE RAMP SHALL HAVE A 12" WIDE BORDER WITH 1/4" GROOVES @ 3/4" O.C. SEE GROOVING DETAIL. THE SURFACE OF RAMP SHALL HAVE A TRANSVERSE BROOMED SURFACE TEXTURE ROUGHER THAN THE SURROUNDING SIDEWALK EXCEPT WHEN LOCATED IN CENTER OF CURB RETURN.

6 A1.1 CURB RAMP DETAIL

1/4" = 1'-0"

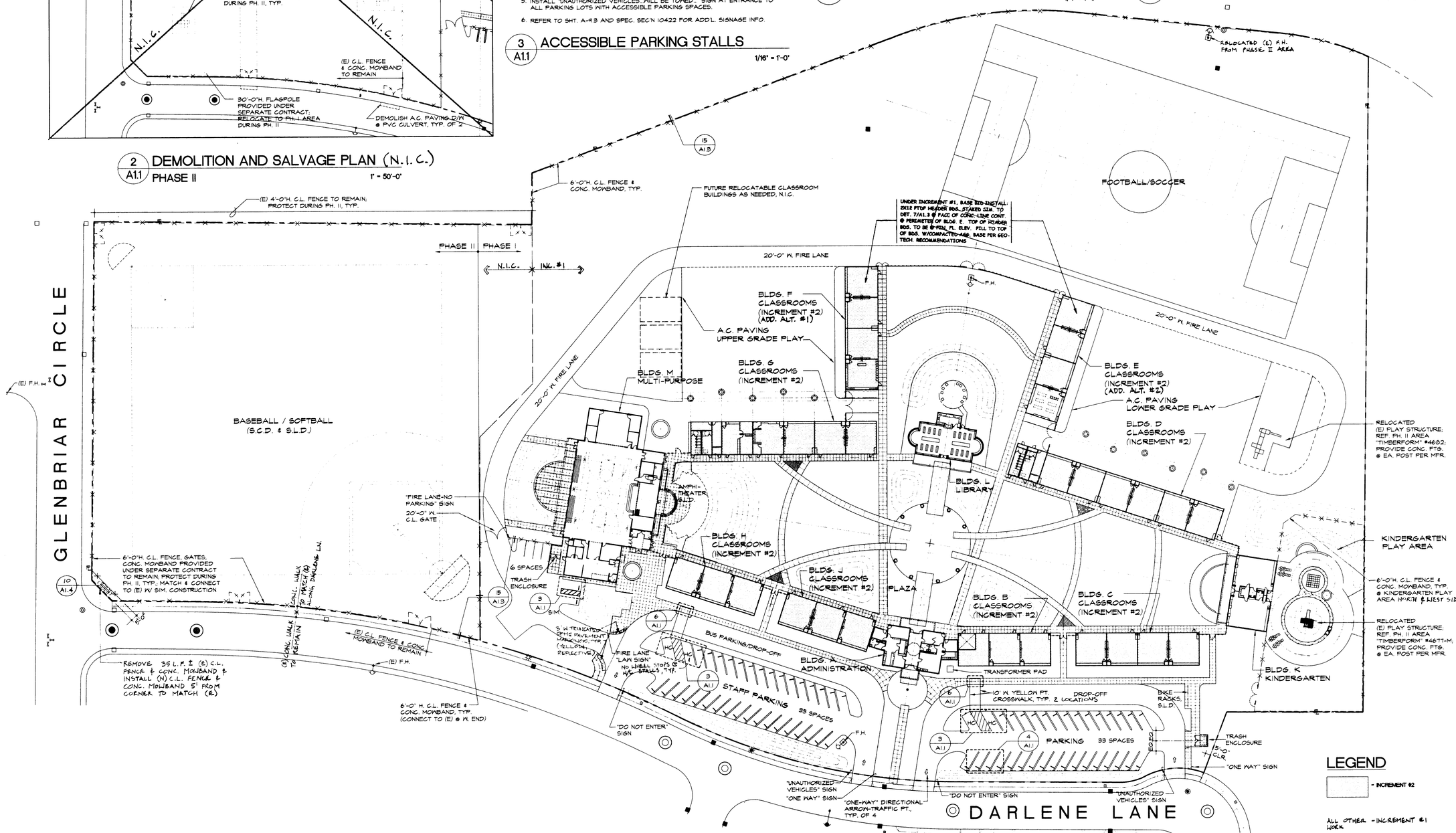

NOTE: FOR SIGNAGE, REFER TO SHT. A9.3 AND SPEC. SECT. 10422 FOR ADDITIONAL INFORMATION

1 A1.1 SITE PLAN PHASE I AND II

1" = 40'-0"

HKA
Harlan Krusemark - Architect
4415 Cowell Road, Suite 230
Concord, CA 94521
Tel: 925.681.1905
Fax: 925.681.1906

LICENSED ARCHITECT HARLAN KRUSEMARK No. C23833 Exp. 9/30/01 STATE OF CALIFORNIA

Revisions	Date

HAWKINS SCHOOL (INCREMENTS #1 & #2)

475 Darlene Lane
Tracy, CA 95377

Jefferson School District
7500 West Linne Road
Tracy, CA 95304

DSA FILE NO. 39-39

IDENTIFICATION STAMP
DIVISION OF THE STATE ARCHITECT
APPL 02 -102225
AC ___ FLS ___ SS ___
DATE ___

Sheet Title:
SITE PLAN; PHASE II DEMOLITION AND SALVAGE PLAN

Printing Date / Purpose:
8/18/00 - DSA APPROVAL

Scale: As Noted
Project Number: 9903.00
Sheet Number:

A1.1

of Sheets

FILE: 9910/A1.1

COPYRIGHT © 2000 HARLAN KRUSEMARK - ARCHITECT (HKA) THESE DRAWINGS ARE PROPRIETARY DOCUMENTS OF HKA AND ARE NOT TO BE DISTRIBUTED, PUBLISHED OR REPRODUCED WITHOUT WRITTEN PERMISSION OF HKA.

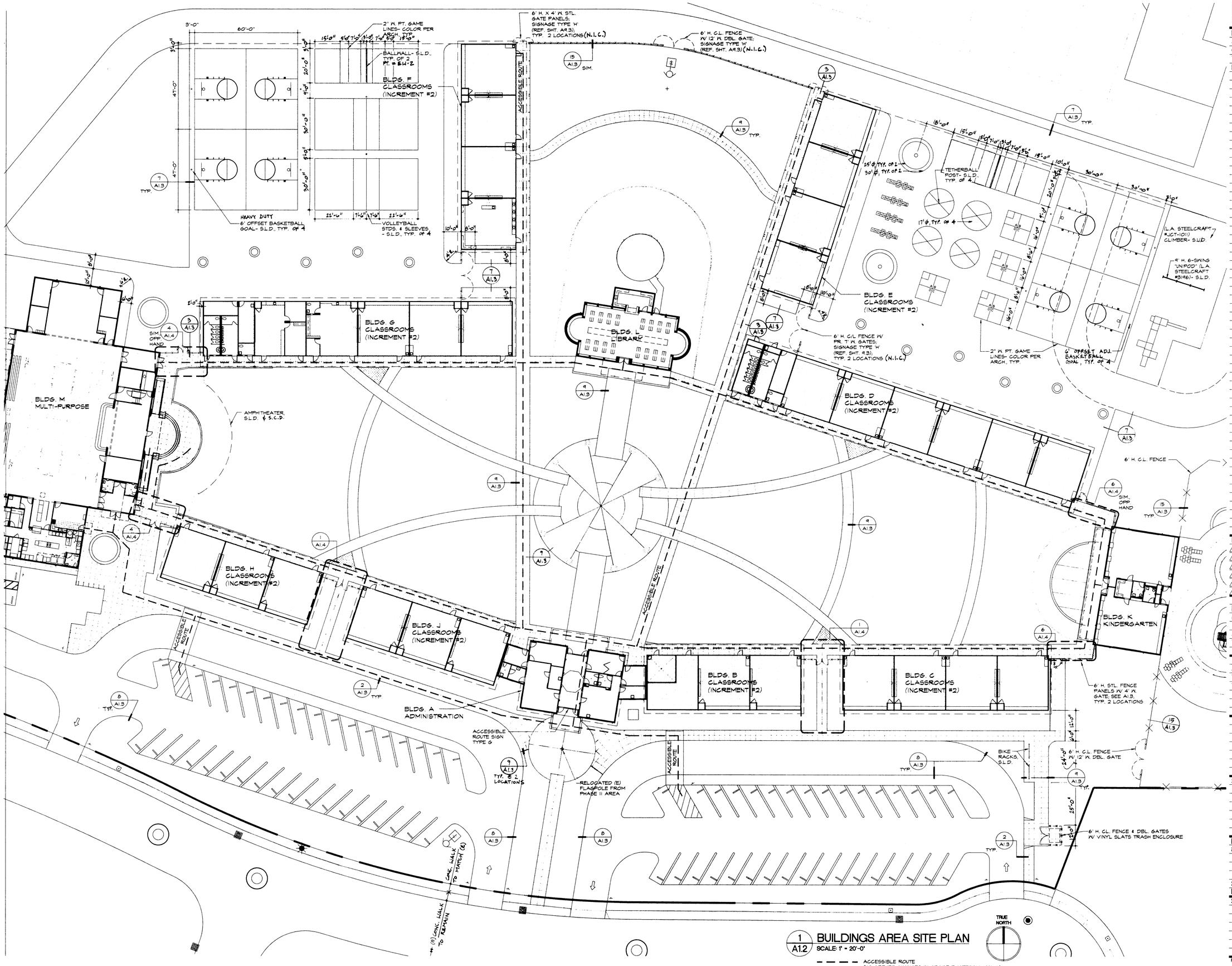

1 A1.2 BUILDINGS AREA SITE PLAN
SCALE: 1" = 20'-0"

ACCESSIBLE ROUTE (NO ABRUPT CHANGES IN GRADE EXCEEDING 1/4" H.)

COPYRIGHT © 2000 HARLAN KRUSEMARK - ARCHITECT (HKA) THESE DRAWINGS ARE PROPRIETARY DOCUMENTS OF HKA AND ARE NOT TO BE DISTRIBUTED, PUBLISHED OR REPRODUCED WITHOUT WRITTEN PERMISSION OF HKA.

HKA
Harlan Krusemark - Architect
4415 Cowell Road, Suite 230
Concord, CA 94521
Tel: 925.681.1905
Fax: 925.681.1906

LICENSED ARCHITECT HARLAN KRUSEMARK No. C23803 Exp. 5/30/01 STATE OF CALIFORNIA

Revisions	Date

HAWKINS SCHOOL
(INCREMENTS #1 & #2)

475 Darlene Lane
Tracy, CA 95377

Jefferson School District
7500 West Linne Road
Tracy, CA 95304

DSA FILE NO. 39-39
IDENTIFICATION STAMP
DIVISION OF THE STATE ARCHITECT
APPL 02 -102225
AC FLS SS
DATE

Sheet Title:
BUILDINGS AREA SITE PLAN

Printing Date / Purpose:
8/18/00 - DSA APPROVAL

Scale: 1" = 20'-0"
Project Number: 9903.00
Sheet Number:

A1.2

of Sheets

FILE: 9910/A1.2

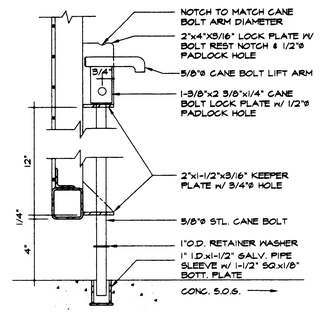

12 A1.3 GATE CANE BOLT/LOCK DETAIL

3" = 1'-0"

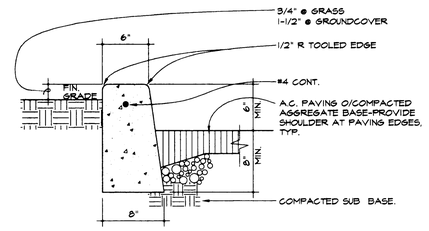

8 A1.3 CURB AT GRADE

1 1/2" = 1'-0"

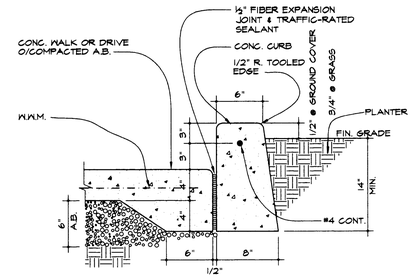

4 A1.3 CURB AT PLANTER

1 1/2" = 1'-0"

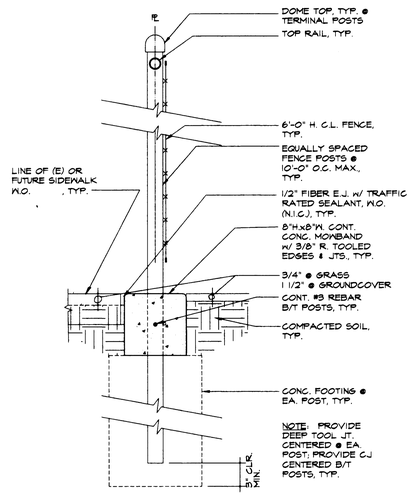

15 A1.3 MOWBAND/CHAINLINK FENCING

1 1/2" = 1'-0"

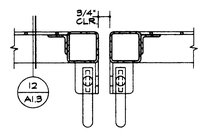

11 A1.3 GATE CANE BOLT/LOCK PLAN

3" = 1'-0"

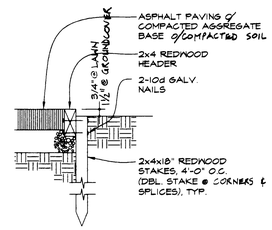

7 A1.3 REDWOOD HEADER DETAIL

1 1/2" = 1'-0"

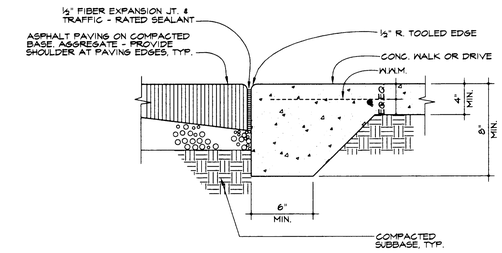

3 A1.3 ASPHALT AT CONCRETE

1 1/2" = 1'-0"

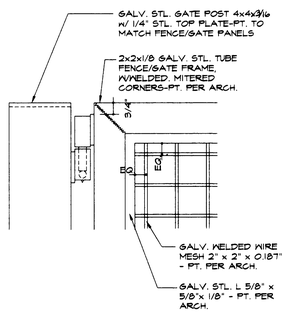

14 A1.3 TYP. GATE HINGE

3" = 1'-0"

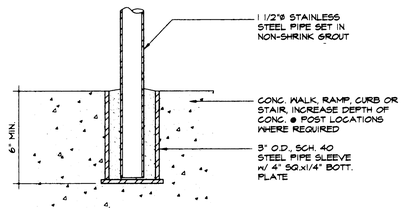

10 A1.3 HANDRAIL POST CONNECTION

3" = 1'-0"

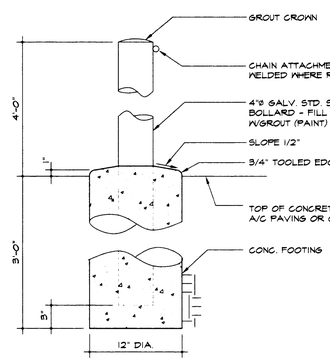

6 A1.3 BOLLARD DETAIL

1 1/2" = 1'-0"

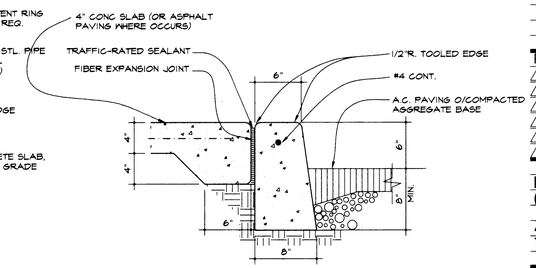

2 A1.3 CURB AT SIDEWALK

1 1/2" = 1'-0"

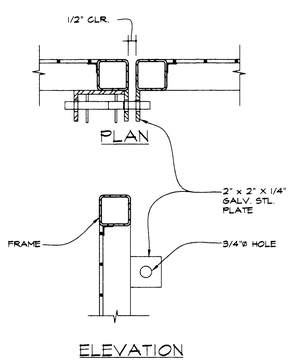

13 A1.3 TYP. GATE SLIDE BOLT

3" = 1'-0"

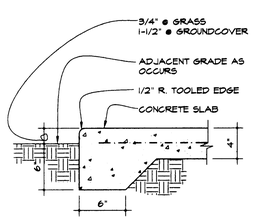

9 A1.3 CONCRETE EDGE DETAIL

1 1/2" = 1'-0"

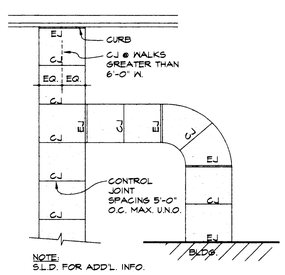

5 A1.3 TYP. CONC. JOINTS

N.T.S.

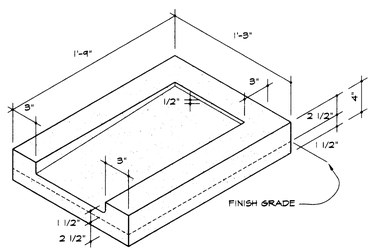

1 A1.3 TYP. PRECAST CONC. SPLASHBLOCK

1 1/2" = 1'-0"

HKA
Harlan Krusemark - Architect
4415 Cowell Road, Suite 230
Concord, CA 94521
Tel: 925.681.1905
Fax: 925.681.1906

LICENSED ARCHITECT HARLAN KRUSEMARK No. C23833 Exp. 5/30/10 STATE OF CALIFORNIA

Revisions	Date

HAWKINS SCHOOL (INCREMENT #1)

475 Darlene Lane
Tracy, CA 95377

Jefferson School District
7500 West Linne Road
Tracy, CA 95304

DSA FILE NO. 39-39
IDENTIFICATION STAMP
DIVISION OF THE STATE ARCHITECT
APPL 02 -102225
ACTIVITY RS 5/2K SS
DATE AUG 2 4 2009

Sheet Title:
SITE DETAILS

Printing Date / Purpose:
8/18/00 - DSA APPROVAL

Scale: AS NOTED
Project Number: 9903.00
Sheet Number:

A1.3

of Sheets

FILE: 9910/A1.3

COPYRIGHT © 2000 HARLAN KRUSEMARK - ARCHITECT (HKA) THESE DRAWINGS ARE PROPRIETARY DOCUMENTS OF HKA AND ARE NOT TO BE DISTRIBUTED, PUBLISHED OR REPRODUCED WITHOUT WRITTEN PERMISSION OF HKA.

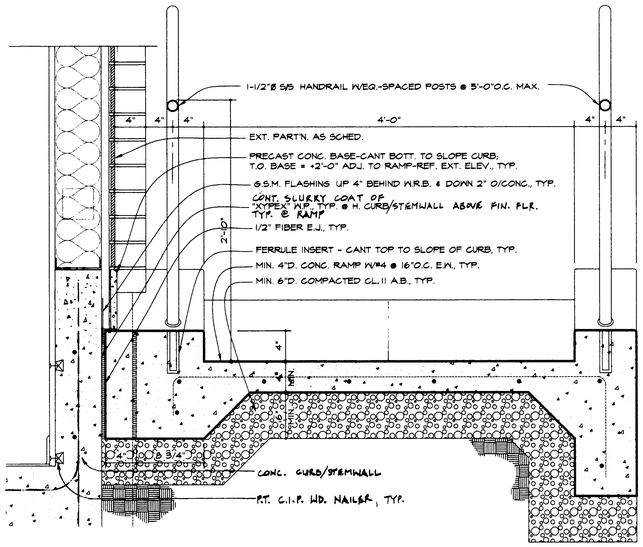

11 A1.4 EXTERIOR RAMP

1 1/2" = 1'-0"

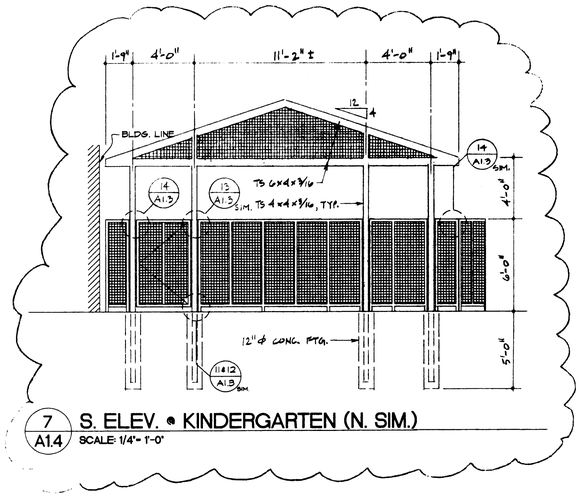

7 A1.4 S. ELEV. @ KINDERGARTEN (N. SIM.)

SCALE: 1/4"= 1'-0"

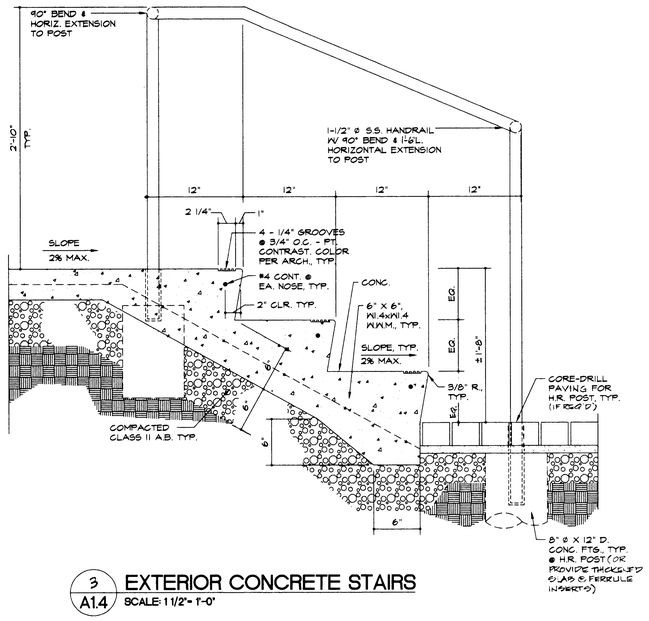

3 A1.4 EXTERIOR CONCRETE STAIRS

SCALE: 1 1/2"= 1'-0"

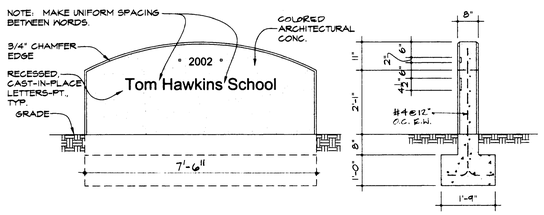

10 A1.4 SCHOOL SIGN

1/2" = 1'-0"

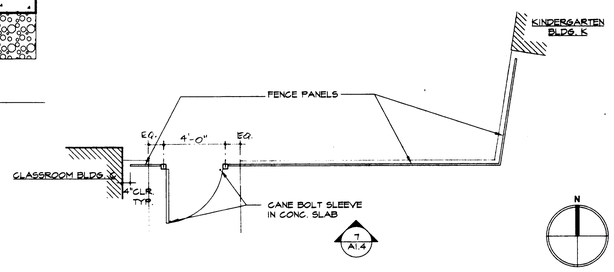

6 A1.4 TYP. FENCE @ KINDERGARTEN - PLAN (N. SIM.)

SCALE: 1/4"= 1'-0"

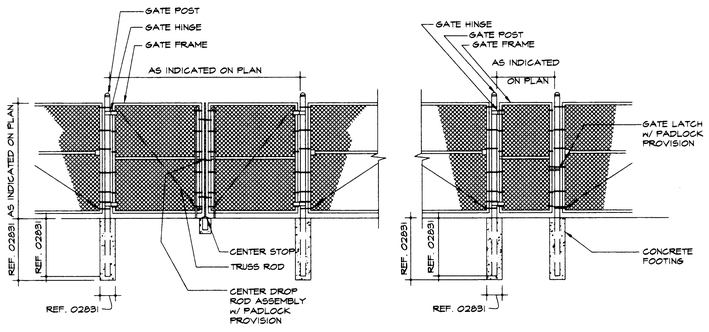

9 A1.4 6'H.-8'H. TYP. CHAIN LINK GATE DETAILS

1/4" = 1'-0"

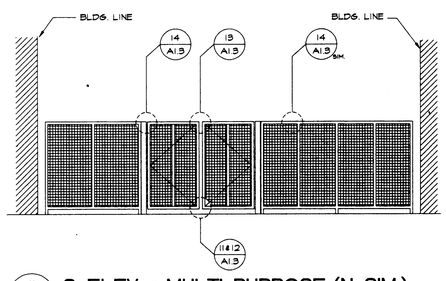

5 A1.4 S. ELEV. @ MULTI-PURPOSE (N. SIM.)

SCALE: 1/4"= 1'-0"

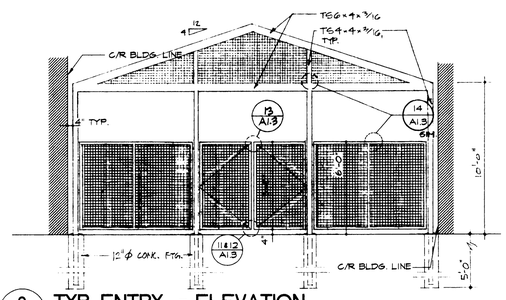

2 A1.4 TYP. ENTRY - ELEVATION

SCALE: 1/4"= 1'-0"

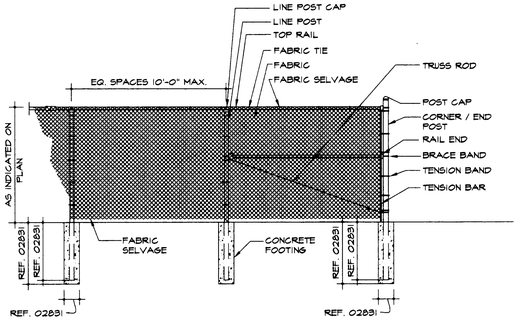

8 A1.4 6'H-8'H. CHAIN LINK FENCING TERMINAL/ CORNER POST DETAIL

1/4" = 1'-0"

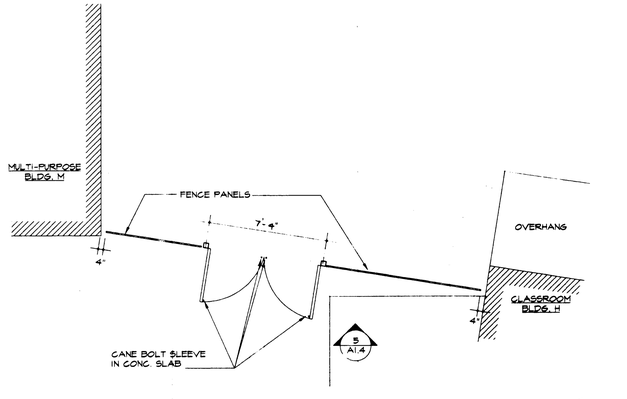

4 A1.4 TYP. FENCE @ MULTI-PURPOSE - PLAN

SCALE: 1/4"= 1'-0"

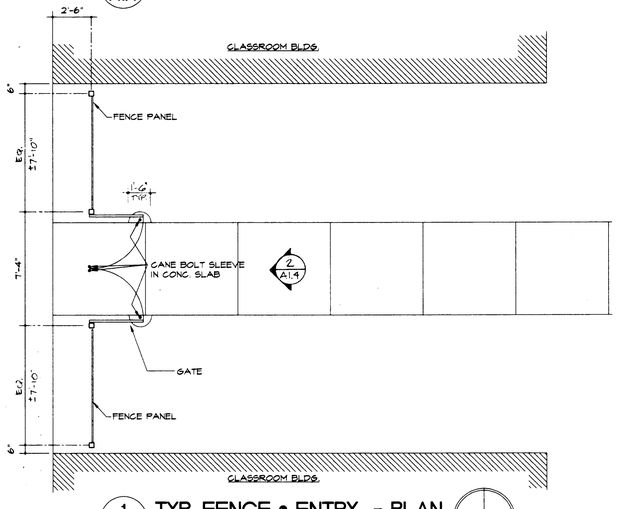

1 A1.4 TYP. FENCE @ ENTRY - PLAN

SCALE: 1/4"= 1'-0"

HKA

Harlan Krusemark - Architect
4415 Cowell Road, Suite 230
Concord, CA 94521
Tel: 925.681.1905
Fax: 925.681.1906

LICENSED ARCHITECT HARLAN KRUSEMARK No. 12833 Exp. 9/30/01 STATE OF CALIFORNIA

Revisions	Date

HAWKINS SCHOOL (INCREMENT #1)

475 Darlene Lane
Tracy, CA 95377

Jefferson School District
7500 West Linne Road
Tracy, CA 95304

DSA FILE NO. 39-39
IDENTIFICATION STAMP
DIVISION OF THE STATE ARCHITECT
APPL 02 -102225
AC FLS SS
DATE

Sheet Title:
EXTERIOR DETAILS

Printing Date / Purpose:
8/18/00 - DSA APPROVAL

Scale: As Noted
Project Number: 9903.00
Sheet Number:

A1.4

of Sheets

FILE: 9910/A1.4

COPYRIGHT © 2000 HARLAN KRUSEMARK - ARCHITECT (HKA) THESE DRAWINGS ARE PROPRIETARY DOCUMENTS OF HKA AND ARE NOT TO BE DISTRIBUTED, PUBLISHED OR REPRODUCED WITHOUT WRITTEN PERMISSION OF HKA.

DOOR SCHEDULE - - SEE SHT. A9.3 FOR TYPES

DOOR						FRAME					DETAILS			REMARKS	SIGNAGE
DOOR I.D.	DOOR SIZE W.xH.x T.	TYPE	MAT'L.	FIN.	GLAZING	TYPE	MAT'L.	FIN.	LABEL (MIN.)	HDWRE. GROUP	HEAD	JAMB	THRESH.		(REF. A9.3)
A01A	3'-0"x7'-0"x1 3/4"	A	H.M.	PT.	1/4" TEMP.	1	H.M.	PT.	-	1	3/A3.9	3/A3.9, SIM.	3/A3.9		E
A01B	3'-0"x7'-0"x1 3/4"	A	H.M.	PT.	1/4" TEMP.	1	H.M.	PT.	-	1	3/A3.9	3/A3.9, SIM.	3/A3.9		E
A01C	3'-0"x7'-0"x1 3/4"	A	H.M.	PT.	1/4" TEMP.	1	H.M.	PT.	-	1	3/A3.9	3/A3.9, SIM.	3/A3.9		E
A01D	3'-0"x7'-0"x1 3/4"	A	H.M.	PT.	1/4" TEMP.	1	H.M.	PT.	-	1	3/A3.9	3/A3.9, SIM.	3/A3.9		E
A02A	3'-0"x7'-0"x1 3/4"	A	WD.	PT.	1/4" TEMP.	2	H.M.	PT.	-	15	2/A3.12, SIM.	2/A3.12, SIM.	3/A3.12, SIM.		B
A03A	3'-0"x7'-0"x1 3/4"	B	WD.	PT.	-	-	H.M.	PT.	-	3	12/A9.6	12/A9.6	-		B
A04A	3'-0"x7'-0"x1 3/4"	C	WD.	PT.	1/4" TEMP.	3	H.M.	PT.	-	3	12/A9.6	12/A9.6	-		C
A05A	3'-0"x7'-0"x1 3/4"	B	WD.	PT.	-	2	H.M.	PT.	-	22	12/A9.6	12/A9.6	-	(1)	A,B
A06A	3'-0"x7'-0"x1 3/4"	B	WD.	PT.	-	2	H.M.	PT.	-	3	12/A9.6	12/A9.6	-		B
A06B	3'-0"x7'-0"x1 3/4"	C	H.M.	PT.	1/4" TEMP.	4	H.M.	PT.	-	4	2/A3.12, SIM.	2/A3.12, SIM.	3/A3.12		B
A07A	3'-0"x7'-0"x1 3/4"	B	WD.	PT.	-	2	H.M.	PT.	-	3	12/A9.6	12/A9.6	-		B
A07B	3'-0"x7'-0"x1 3/4"	C	H.M.	PT.	1/4" TEMP.	4	H.M.	PT.	-	4	2/A3.12, SIM.	2/A3.12, SIM.	3/A3.12		B
A08A	3'-0"x7'-0"x1 3/4"	D	WD.	PT.	1/4" TEMP.	2	H.M.	PT.	-	15	2/A3.12, SIM.	2/A3.12, SIM.	3/A3.12, SIM.		B
A09A	3'-0"x7'-0"x1 3/4"	B	WD.	PT.	-	2	H.M.	PT.	-	13	2/A3.12, SIM.	2/A3.12, SIM.	3/A3.12, SIM.	(1)	A,B
A10A	3'-0"x7'-0"x1 3/4"	B	WD.	PT.	-	2	H.M.	PT.	-	13	12/A9.6	12/A9.6	-	(1)	A,B
A11A	3'-0"x7'-0"x1 3/4"	B	WD.	PT.	-	2	H.M.	PT.	-	2	12/A9.6	12/A9.6	-		B
A12A	3'-0"x7'-0"x1 3/4"	B	WD.	PT.	-	2	H.M.	PT.	-	3	12/A9.6	12/A9.6	-		B
A12B	3'-0"x7'-0"x1 3/4"	C	H.M.	PT.	1/4" TEMP.	4	H.M.	PT.	-	4	2/A3.12, SIM.	2/A3.12, SIM.	3/A3.12, SIM.		B
A13A	3'-0"x7'-0"x1 3/4"	C	WD.	PT.	1/4" TEMP.	2	H.M.	PT.	-	15	2/A3.12, SIM.	2/A3.12, SIM.	3/A3.12, SIM.		B
A13B	3'-0"x7'-0"x1 3/4"	B	WD.	PT.	-	2	H.M.	PT.	-	3	12/A9.6	12/A9.6	-		B
A13C	3'-0"x7'-0"x1 3/4"	C	H.M.	PT.	1/4" TEMP.	4	H.M.	PT.	-	4	2/A3.12, SIM.	2/A3.12, SIM.	3/A3.12		B
A13D	12'-0"x10'-0"x MFR.	H	STL. PANEL	MFR.	-	-	-	-	-	MFR.	1/A3.15, SIM.	MFR.	MFR.	CONTINUOUSLY HINGED #433 (2)	-
A21A	2'-0" X 4'-0" X 1 3/4"	B	H.M.	PT.	-	13	H.M.	PT.	-	21	2/A3.12, SIM.	2/A3.12, SIM.	11/A9.6	REF. ROOF PLAN. FLD. VERIFY MAX DR. SIZE	-
A22A	2'-0" X 4'-0" X 1 3/4"	B	H.M.	PT.	-	13	H.M.	PT.	-	21	2/A3.12, SIM.	2/A3.12, SIM.	11/A9.6	REF. ROOF PLAN. FLD. VERIFY MAX. DR. SIZE	-

(1) 3/4" UNDERCUT @ DR. BOTTOM
(2) CYLINDER KEYED TO MASTER

WINDOW SCHEDULE - - SEE SHT. A9.3 FOR TYPES

WINDOW I.D.	WINDOW SIZE W. x H.	MAT'L.	FIN.	GLAZING	LABEL (MIN.)	DETAILS HEAD	DETAILS JAMB	DETAILS SILL	REMARKS
A	3'-3 1/2" X 5'-11 1/4"	ALUM.	PT.	1/4"	-	4/A3.8	4/A3.8, SIM.	3/A3.8	
B	3'-3 1/2" X 3'-11 1/4"	ALUM.	PT.	1/4"	-	4/A3.8	4/A3.8, SIM.	3/A3.8	
K	3'-3 1/2" X 3'-11 1/4"	ALUM.	PT.	TRANSLUC.	-	7/A3.9	7/A3.9, SIM.	6/A3.9	

FINISH SCHEDULE

ROOM I.D.	ROOM NAME	FLOOR	BASE	WAINSCOT (REF. ELEVS.)	WALLS	CEILING MATERIAL	CEILING HEIGHT	NOTES
A01	GALLERY	COLORED CONC.	PRE-CAST CONC.	MASONRY VEN.	GYP. BD./PT.	A.C.T.-3 & GYP.BD./PT.	VARIES	#2 ALT. COLORS
A02	RECEPTION/WAIT.	CPT.-1/V.C.T.-1 & 2	RUBBER	-	GYP. BD./PT.	A.C.T.-1 & A.C.T.-3	VARIES	
A03	WORKROOM	V.C.T.-1	RUBBER	-	GYP. BD./PT.	GYP. BD./PT.	8'-0"	
A04	NURSE	V.C.T.-1	RUBBER	-	GYP. BD./PT.	A.C.T.-1	8'-0"	
A05	TOILET	CT.-1	CT.-1	C.T.-2	GYP. BD./PT.	GYP. BD./PT.	8'-0"	
A06	VICE PRINCIPAL	CPT.-1	RUBBER	-	GYP. BD./PT.	A.C.T.-1	8'-0"	
A07	PRINCIPAL	CPT.-1	RUBBER	-	GYP. BD./PT.	A.C.T.-1	VARIES	
A08	STAFF LOUNGE	CPT.-2/V.C.T.-3 & 4	RUBBER	-	GYP. BD./PT.	A.C.T.-1 & 3	VARIES	
A09	TOILET	CT-1	CT-1	CT-2	GYP. BD./PT.	GYP. BD./PT.	8'-0"	
A10	TOILET	CT-1	CT-1	CT-2	GYP. BD./PT.	GYP. BD./PT.	8'-0"	
A11	WORKROOM	V.C.T.-3	RUBBER	-	GYP. BD./PT.	A.C.T.-1	8'-0"	
A12	OFFICE	CPT.-2	RUBBER	-	GYP. BD./PT.	A.C.T.-1	8'-0"	
A13	OFFICE	CPT.-2	RUBBER	-	GYP. BD./PT.	A.C.T.-1	10'-0"	
A21	MECH. SPACE	PLYWOOD	-	-	GYP. BD.	STRUCT.	VARIES	
A22	MECH. SPACE	PLYWOOD	-	-	GYP. BD.	STRUCT.	VARIES	

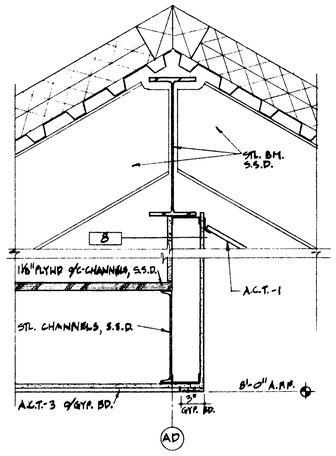

4/A2.1 LOWER CLG. @ A02/MECH. SPACE FRAMING
SCALE: 1 1/2" = 1'-0"

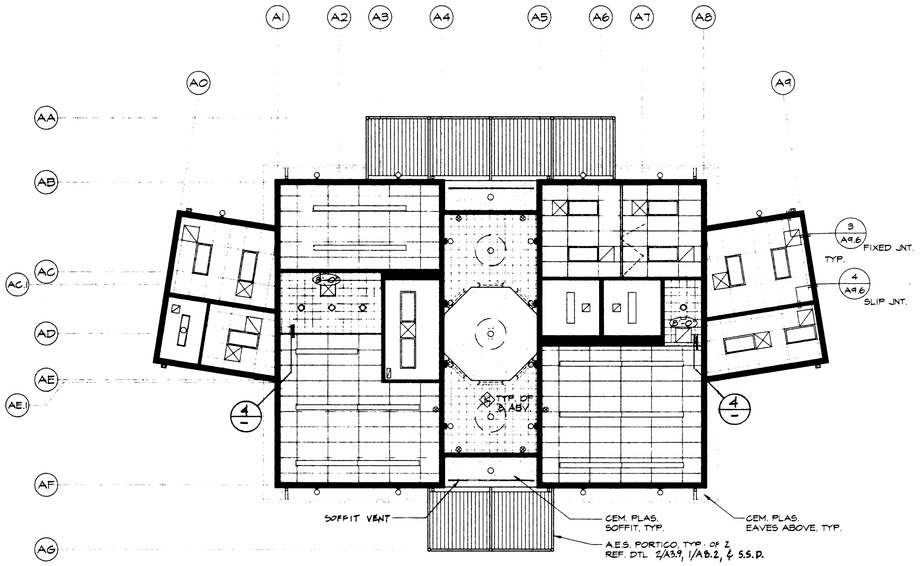

2/A2.1 BUILDING A - REFLECTED CEILING PLAN
SCALE: 1/8" = 1'-0"

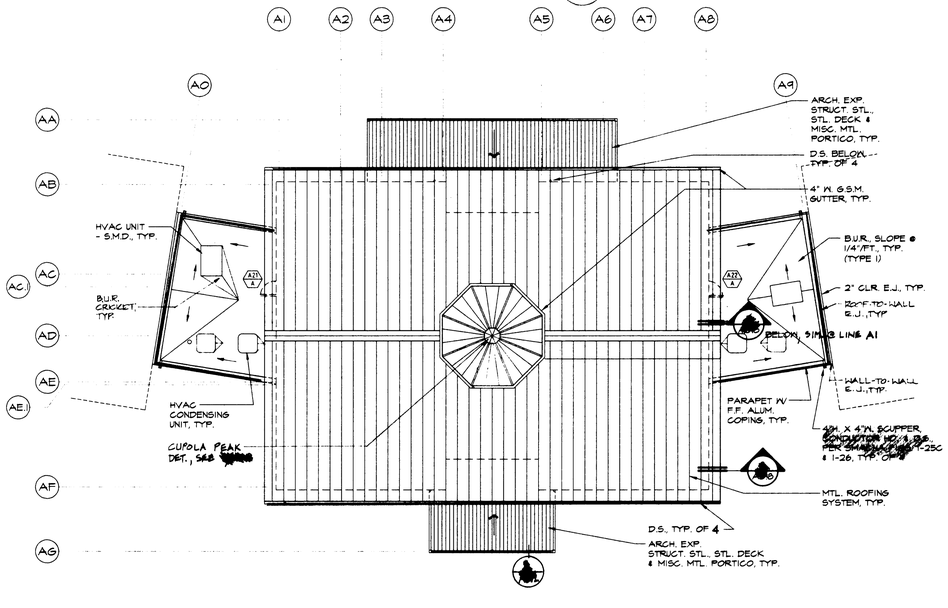

3/A2.1 BUILDING A - ROOF PLAN
SCALE: 1/8" = 1'-0"

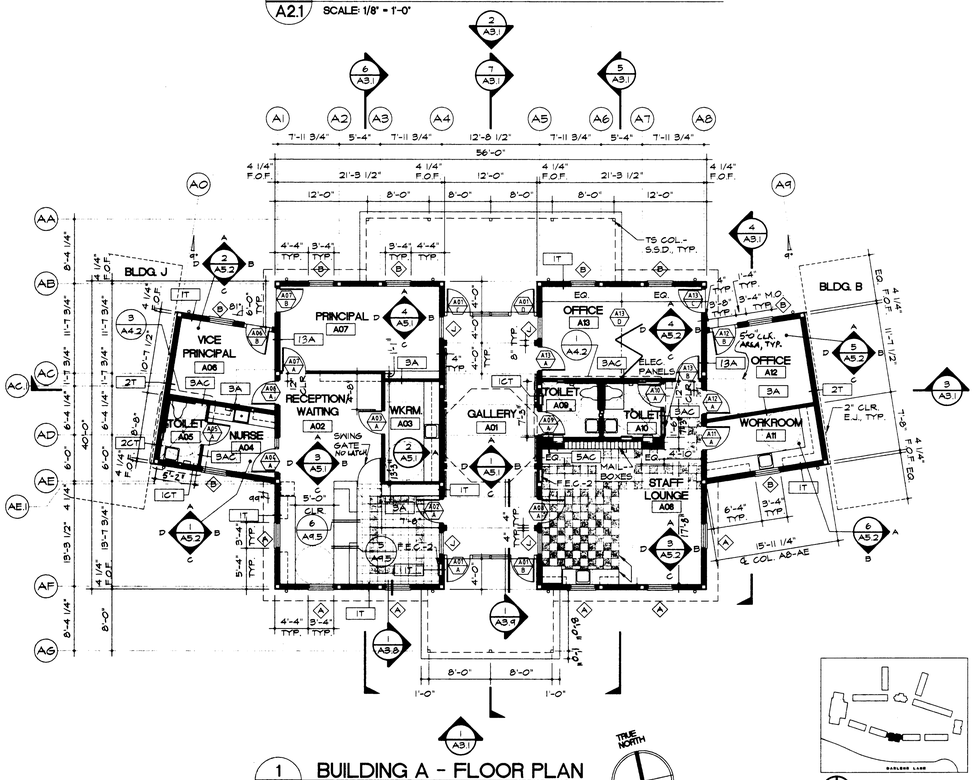

1/A2.1 BUILDING A - FLOOR PLAN
SCALE: 1/8" = 1'-0"

SITE KEY

COPYRIGHT © 2000 HARLAN KRUSEMARK - ARCHITECT (HKA) THESE DRAWINGS ARE PROPRIETARY DOCUMENTS OF HKA AND ARE NOT TO BE DISTRIBUTED, PUBLISHED OR REPRODUCED WITHOUT WRITTEN PERMISSION OF HKA.

HKA
Harlan Krusemark - Architect
4415 Cowell Road, Suite 230
Concord, CA 94521
Tel: 925.681.1905
Fax: 925.681.1906

LICENSED ARCHITECT HARLAN KRUSEMARK No. C23833 Exp. 9/30/01 STATE OF CALIFORNIA

Revisions	Date

HAWKINS SCHOOL (INCREMENT #1)

475 Darlene Lane
Tracy, CA 95377

Jefferson School District
7500 West Linne Road
Tracy, CA 95304

DSA FILE NO. 39-39
IDENTIFICATION STAMP
DIVISION OF THE STATE ARCHITECT
APPL 02 -102225
AC FLS FM SS
DATE AUG 2 1 2000

Sheet Title:
BUILDING A: ADMINISTRATION FLOOR PLAN, REFLECTED CEILING PLAN, ROOF PLAN, DOOR, WINDOW AND ROOM FINISH SCHEDULES

Printing Date / Purpose:
8/18/00 - DSA APPROVAL

Scale: 1/8" = 1'-0"
Project Number: 9903.00
Sheet Number:
A2.1
of Sheets

FILE: 9910/A2.1

DOOR SCHEDULE - - SEE SHT. A9.3 FOR TYPES

DOOR						FRAME					DETAILS			REMARKS	SIGNAGE
DOOR I.D.	DOOR SIZE WxHx T.	TYPE	MAT'L.	FIN.	GLAZING	TYPE	MAT'L.	FIN.	LABEL (MIN.)	HDWRE. GROUP	HEAD	JAMB	THRESH		REF. SHT. A9.3
K01A	3'-0"x7'-0"x1 3/4"	A	H.M.	PT.	1/4" TEMP.	4	H.M.	PT.	-	1	2/A3.12 SIM.	2/A3.12 SIM.	3/A3.12		B,E
K01B	3'-0"x7'-0"x1 3/4"	A	H.M.	PT.	1/4" TEMP.	4	H.M.	PT.	-	1	2/A3.12 SIM.	2/A3.12 SIM.	3/A3.12		B
K02A	3'-0"x7'-0"x1 3/4"	A	H.M.	PT.	1/4" TEMP.	4	H.M.	PT.	-	1	2/A3.12 SIM.	2/A3.12 SIM.	3/A3.12		B,E
K02B	3'-0"x7'-0"x1 3/4"	A	H.M.	PT.	1/4" TEMP.	4	H.M.	PT.	-	1	2/A3.12 SIM.	2/A3.12 SIM.	3/A3.12		B
K03A	3'-0"x7'-0"x1 3/4"	C	WD.	PT.	1/4" TEMP.	2	H.M.	PT.	-	2	12/A9.6	12/A9.6	-	(2)	B
K03B	3'-0"x7'-0"x1 3/4"	C	WD.	PT.	1/4" TEMP.	2	H.M.	PT.	-	2	12/A9.6	12/A9.6	-	(2)	B
K04A	3'-0"x7'-0"x1 3/4"	B	WD.	PT.	-	2	H.M.	PT.	-	14	12/A9.6	12/A9.6	-	(2)	A,B
K05A	3'-0"x7'-0"x1 3/4"	B	WD.	PT.	-	2	H.M.	PT.	-	14	12/A9.6	12/A9.6	-	(2)	A,B
K06A	2'-0"x4'-4"x1 3/4"	B	WD.	PT.	-	5	H.M.	PT.	-	20	12/A9.6	12/A9.6	-		-
K07A	2'-0"x4'-4"x1 3/4"	B	WD.	PT.	-	5	H.M.	PT.	-	20	12/A9.6	12/A9.6	-		-

(1) VFY. LOUVER FREE AREA W/MECH.

(2) 3/4" LINDERCUT @ DR. BOTTOM

WINDOW SCHEDULE - - SEE SHT. A9.3 FOR TYPES

WINDOW I.D.	WINDOW SIZE WX H	MAT'L.	FIN.	GLAZING	LABEL (MIN.)	HEAD	JAMB	SILL	REMARKS
B	3'-3 1/2" x 3'-11 1/4"	ALUM.	PT.	1/4" TEMP.	-	4/A3.10 SIM	4/A3.10 SIM	3/A3.10	

FINISH SCHEDULE

ROOM I.D.	ROOM NAME	FLOOR	BASE	WAINSCOT (REF. ELEVS.)	WALLS	CEILING MATERIAL	CEILING HEIGHT	NOTES
K01	CLASSROOM	CPT.-1/V.C.T-1&2	RUBBER	-	V.T.P./GYP. BD.	ACOUS. STL. DECK	VARIES	
K02	CLASSROOM	CPT.-1/V.C.T-1&2	RUBBER	-	V.T.P./GYP. BD.	ACOUS. STL. DECK	VARIES	
K03	WORKROOM	CPT.	RUBBER	-	GYP. BD./PT.	GYP. BD.	8'-0"	
K04	TOILET	CT-3	CT-3	CT-4	GYP. BD./PT.	GYP. BD.	8'-0"	
K05	TOILET	CT-3	CT-3	CT-4	GYP. BD./PT.	GYP. BD.	8'-0"	
K06	HVAC	SEAL. CONC	RUBBER	-	GYP. BD.	GYP. BD.	8'-0"	
K07	HVAC	SEAL. CONC	RUBBER	-	GYP. BD.	GYP. BD.	8'-0"	

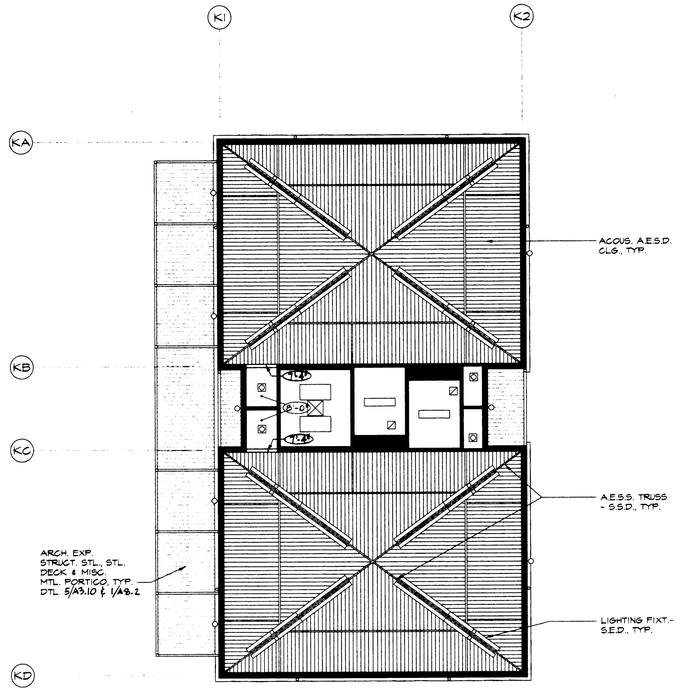

2 A2.2 BUILDING K - REFLECTED CEILING PLAN
SCALE: 1/8" = 1'-0"

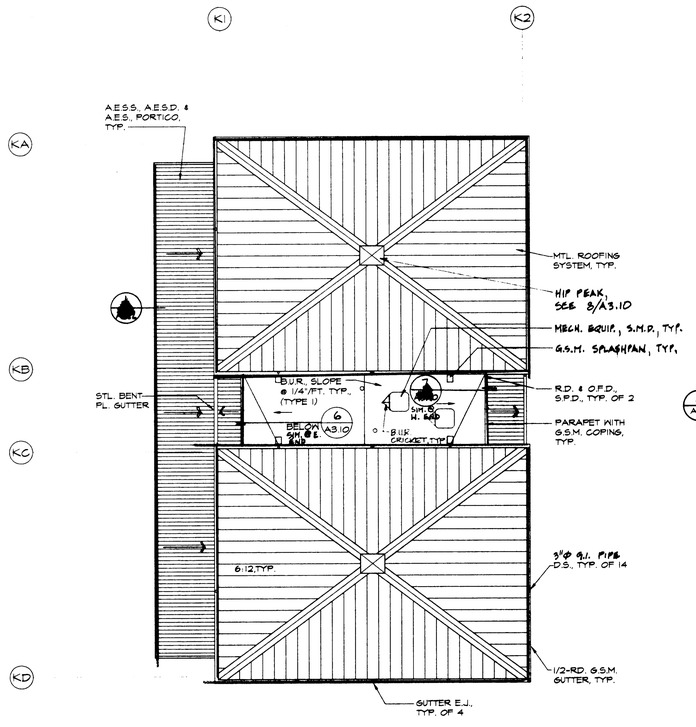

3 A2.2 BUILDING K - ROOF PLAN
SCALE: 1/8" = 1'-0"

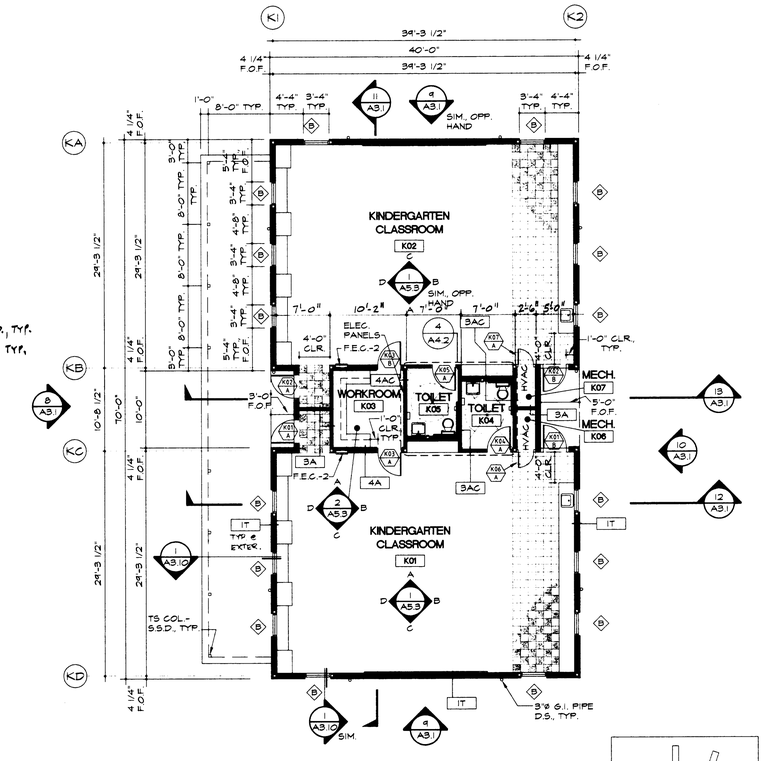

1 A2.2 BUILDING K - FLOOR PLAN
SCALE: 1/8" = 1'-0"

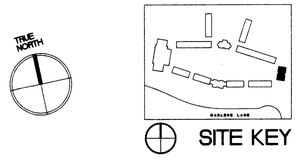

SITE KEY

HKA
Harlan Krusemark - Architect
4415 Cowell Road, Suite 230
Concord, CA 94521
Tel: 925.681.1905
Fax: 925.681.1906

LICENSED ARCHITECT HARLAN KRUSEMARK No. C23833 Exp. 9/30/01 STATE OF CALIFORNIA

Revisions	Date

HAWKINS SCHOOL (INCREMENT #1)

475 Darlene Lane
Tracy, CA 95377

Jefferson School District
7500 West Linne Road
Tracy, CA 95304

DSA FILE NO. 39-39
IDENTIFICATION STAMP
DIVISION OF THE STATE ARCHITECT
APPL 02 -102225
AC
DATE AUG - 4 2000

Sheet Title:
BUILDING K: KINDERGARTEN FLOOR PLAN, REFLECTED CEILING PLAN, ROOF PLAN; DOOR, WINDOW, AND ROOM FINISH SCHEDULES

Printing Date / Purpose:
8/18/00 - DSA APPROVAL

Scale: 1/8" = 1'-0"
Project Number: 9903.00
Sheet Number:

A2.2

of Sheets

FILE: 9910/A2.2

COPYRIGHT © 2000 HARLAN KRUSEMARK - ARCHITECT (HKA) THESE DRAWINGS ARE PROPRIETARY DOCUMENTS OF HKA AND ARE NOT TO BE DISTRIBUTED, PUBLISHED OR REPRODUCED WITHOUT WRITTEN PERMISSION OF HKA.

DOOR SCHEDULE - ⬡ - SEE SHT. A9.3 FOR TYPES

DOOR						FRAME					DETAILS			REMARKS	SIGNAGE
DOOR I.D.	DOOR SIZE W.xH.x T.	TYPE	MAT'L.	FIN.	GLAZING	TYPE	MAT'L.	FIN.	LABEL (MIN.)	HDWRE. GROUP	HEAD	JAMB	THRESH		(REF. SHT. A9.3)
L01A	(2) 3'-0"x7'-0"x1 3/4"	A	H.M.	PT.	1/4" TEMP.	6	H.M.	PT.	-	6	2/A3.12	2/A3.12 SIM.	3/A3.12		C,E
L01B	3'-0"x7'-0"x1 3/4"	A	H.M.	PT.	1/4" TEMP.	4	H.M.	PT.	-	1	2/A3.12	2/A3.12 SIM.	3/A3.12		B
L02A	3'-0"x7'-0"x1 3/4"	B	WD.	PT.	-	2	H.M.	PT.	-	2	12/A9.6	12/A9.6	-		B

WINDOW SCHEDULE - ◇ - SEE SHT. A9.3 FOR TYPES

WINDOW I.D.	WINDOW SIZE W x H	MAT'L.	FIN.	GLAZING	LABEL (MIN.)	DETAILS			REMARKS
						HEAD	JAMB	SILL	
B	3'-3 1/2" x 3'-11 1/4"	ALUM.	PT.	1/4" TEMP.	-	4/A3.8	4/A3.8 SIM.	3/A3.8	
C	11'-4" x 3'-11 1/4"	ALUM.	PT.	1/4" TEMP.	-	4/A3.8 SIM	4/A3.8 SIM.	3/A3.8 SIM.	FACET DIMS; ON ARC (V.I.F.)
D	2'-3 1/2" x 2'-7 1/4"	ALUM.	PT.	1/4" TEMP.	-	5/A3.12	5/A3.12 SIM.	4/A3.12	
E	6'-7 1/2" x 3'-11 1/4"	ALUM.	PT.	1/4" TEMP.	-	4/A3.8	4/A3.8 SIM.	3/A3.8	
K	3'-3-1/2" x 3'-11 1/4"	ALUM.	PT.	TRANSLUC.	-	9/A3.12	9/A3.12 SIM.	8/A3.12	

FINISH SCHEDULE

ROOM I.D.	ROOM NAME	FLOOR	BASE	WAINSCOT (SEE ELEVS.)	WALLS	CEILING		NOTES
						MATERIAL	HEIGHT	
L01	LIBRARY	CPT-3	RUBBER	-	GYP. BD./PT.	ACOUS. STL. DECK	VARIES	
L02	WORKROOM	CPT-3	RUBBER	-	GYP. BD./PT.	A.C.T.-1	8'-0"	

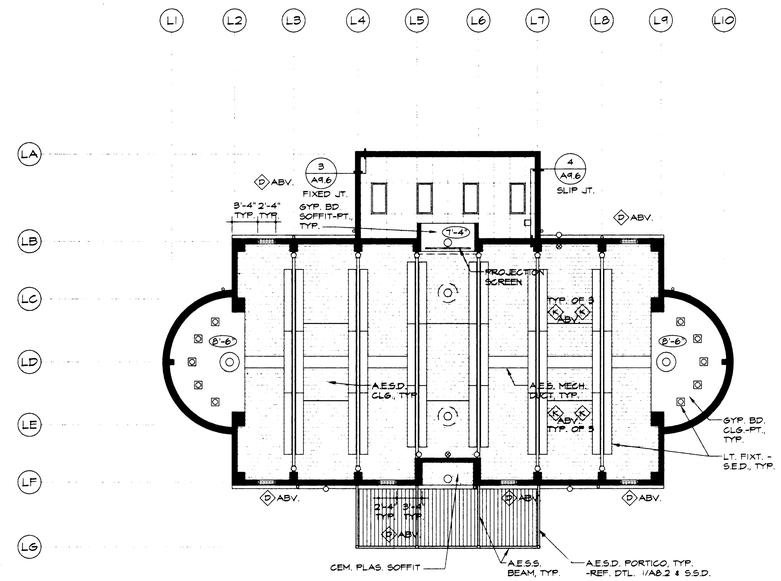

2 A2.3 BUILDING L - REFLECTED CEILING PLAN
SCALE: 1/8" = 1'-0"

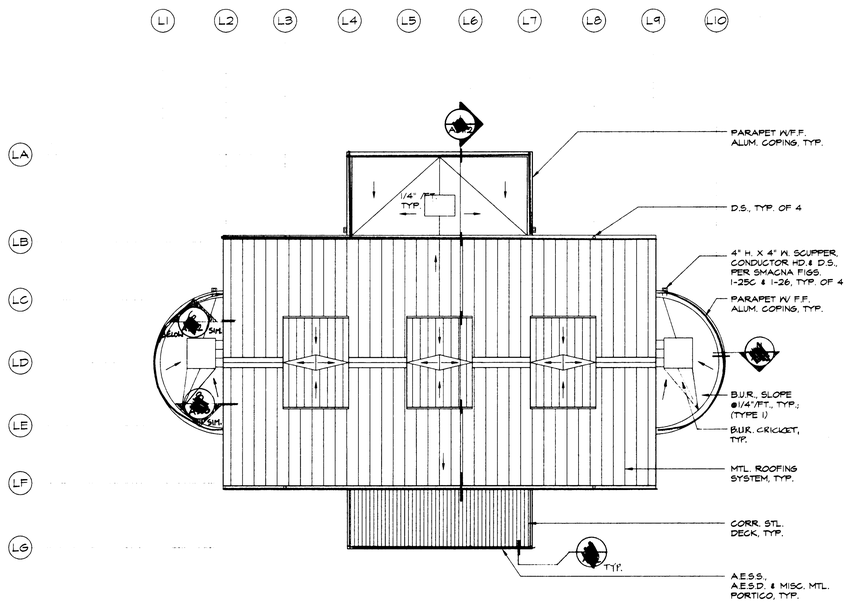

3 A2.3 BUILDING L - ROOF PLAN
SCALE: 1/8" = 1'-0"

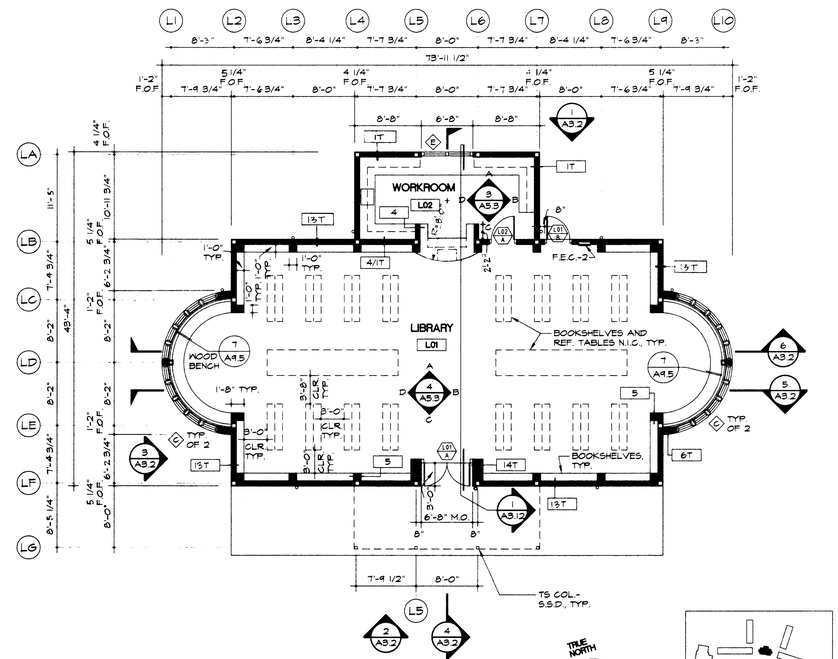

1 A2.3 BUILDING L - FLOOR PLAN
SCALE: 1/8" = 1'-0"

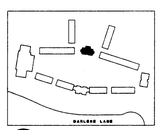

SITE KEY

HKA
Harlan Krusemark - Architect
4415 Cowell Road, Suite 230
Concord, CA 94521
Tel: 925.681.1905
Fax: 925.681.1906

LICENSED ARCHITECT HARLAN KRUSEMARK No. C23803 Exp. 9/30/01 STATE OF CALIFORNIA

Revisions	Date

HAWKINS SCHOOL (INCREMENT #1)

475 Darlene Lane
Tracy, CA 95377

Jefferson School District
7500 West Linne Road
Tracy, CA 95304

DSA FILE NO. 39-39
IDENTIFICATION STAMP
DIVISION OF THE STATE ARCHITECT
APPL 02 -102225
ACK KPV FLS SS
DATE AUG 2 4 2000

Sheet Title:
BUILDING L: LIBRARY FLOOR PLAN, REFLECTED CEILING PLAN, ROOF PLAN; DOOR, WINDOW AND ROOM FINISH SCHEDULES

Printing Date / Purpose:
8/18/00 - DSA APPROVAL

Scale: 1/8" = 1'-0"
Project Number: 9903.00
Sheet Number:

A2.3

of Sheets

FILE: 9910\A2.3

COPYRIGHT © 2000 HARLAN KRUSEMARK - ARCHITECT (HKA) THESE DRAWINGS ARE PROPRIETARY DOCUMENTS OF HKA AND ARE NOT TO BE DISTRIBUTED, PUBLISHED OR REPRODUCED WITHOUT WRITTEN PERMISSION OF HKA.

30

DOOR SCHEDULE -

DOOR						FRAME				DETAILS			REMARKS	SIGNAGE
DOOR I.D.	DOOR SIZE WxHx T.	TYPE	MAT'L.	FIN.	GLAZING	TYPE	MAT'L.	FIN.	LABEL (MIN.)	HDWRE GROUP	HEAD	JAMB	THRESH.		REF. SHT. A9.3
M01A	(3) 3'-0"x7'-0"x1 3/4"	D	H.M.	PT.	1/4" TEMP.	11	H.M.	PT.	-	11	12/A9.6	12/A9.6	-		C, F
M01B	(2) 3'-0"x7'-0"x1 3/4"	D	H.M.	PT.	1/4" TEMP.	6	H.M.	PT.	-	6	12/A9.6	12/A9.6	-		C
M01C	(2) 3'-0"x7'-0"x1 3/4"	D	H.M.	PT.	1/4" TEMP.	6	H.M.	PT.	-	6	2/A9.12 SIM.	2/A9.12 SIM.	5/A9.12		C
M01D	(2) 3'-0"x7'-0"x1 3/4"	D	H.M.	PT.	1/4" TEMP.	6	H.M.	PT.	-	6	2/A9.12 SIM.	2/A9.12 SIM.	5/A9.12		C
M02A	28'-0"x14'-4"x MFR.	F	STL. PNL.	MFR.	-	-	-	-	-	MFR.	1/A9.13	MFR.	MFR.	SINGLE- PANEL MODEL #45 (3)	-
M02B	3'-0"x7'-0"x1 3/4"	D	H.M.	PT.	1/4" TEMP.	2	H.M.	PT.	-	12	12/A9.6	12/A9.6	-		B
M03A	3'-0"x7'-0"x1 3/4"	E	WD.	PT.	-	2	H.M.	PT.	-	2	12/A9.6	12/A9.6	-	(1)	B
M04A	3'-6"x7'-0"x1 3/4"	B	WD.	PT.	-	7	H.M.	PT.	60	5	12/A9.6	12/A9.6	-		B
M05A	3'-0"x7'-0"x1 3/4"	E	WD.	PT.	-	2	H.M.	PT.	-	2	12/A9.6	12/A9.6	-	(1)	B
M06A	3'-6"x7'-0"x1 3/4"	B	WD.	PT.	-	7	H.M.	PT.	60	5	12/A9.6	12/A9.6	-		B
M07A	3'-6"x7'-0"x1 3/4"	B	WD.	PT.	-	7	H.M.	PT.	60	5	12/A9.6	12/A9.6	-		B
M08A	3'-6"x7'-0"x1 3/4"	B	WD.	PT.	-	7	H.M.	PT.	-	5	2/A9.12 SIM.	2/A9.12 SIM.	-		B , F
M09A	3'-0"x7'-0"x1 3/4"	B	WD.	PT.	-	2	H.M.	PT.	-	3	12/A9.6	12/A9.6	-		B
M10A	3'-0"x7'-0"x1 3/4"	A	H.M.	PT.	1/4" TEMP.	9	H.M.	PT.	-	9	4/A9.14 SIM.	4/A9.14 SIM.	4/A9.14 SIM.		-
M10B	NOT USED														-
M10C	32'-0"x10'-4"x MFR.	F	STL. PNL.	MFR.	-	-	-	-	-	MFR.	1/A9.13	MFR.	MFR.	SINGLE-PANEL MODEL #45 (3)	-
M11A	3'-6"x7'-0"x1 3/4"	B	WD.	PT.	-	7	H.M.	PT.	60	5	2/A9.12 SIM.	2/A9.12 SIM.	-		B
M12A	(2) 3'-0"x7'-0"x1 3/4"	A	H.M.	PT.	1/4" TEMP.	6	H.M.	PT.	-	6	2/A9.12 SIM.	2/A9.12 SIM.	5/A9.12		C,E
M12B	(2) 3'-0"x7'-0"x1 3/4"	A	H.M.	PT.	1/4" TEMP.	6	H.M.	PT.	-	6	2/A9.12 SIM.	2/A9.12 SIM.	5/A9.12		C,E
M13A	3'-0"x7'-0"x1 3/4"	B	WD.	PT.	-	2	H.M.	PT.	-	13	12/A9.6	12/A9.6	-	(2)	A,B
M14A	3'-0"x7'-0"x1 3/4"	B	WD.	PT.	-	2	H.M.	PT.	-	13	12/A9.6	12/A9.6	-	(2)	A,B
M15A	12'-0"x7'-0"x MFR.	G	S/S	MFR.	-	-	S/S	-	-	MFR.	16/A9.6	16/A9.6	-	(3)(4)	-
M15B	3'-0"x7'-0"x1 3/4"	D	H.M.	PT.	1/4" TEMP.	2	H.M.	PT.	-	3	12/A9.6	12/A9.6	-		B
M16A	3'-6"x7'-0"x1 3/4"	D	H.M.	PT.	1/4" TEMP.	8	H.M.	PT.	-	8	2/A9.12 SIM.	2/A9.12 SIM.	5/A9.12		B
M16B	3'-0"x7'-0"x1 3/4"	D	H.M.	PT.	1/4" TEMP.	2	H.M.	PT.	-	12	12/A9.6	12/A9.6	-		B
M17A	3'-0"x7'-0"x1 3/4"	C	H.M.	PT.	1/4" TEMP.	2	H.M.	PT.	-	3	12/A9.6	12/A9.6	-	(2)	B
M18A	3'-0"x7'-0"x1 3/4"	B	H.M.	PT.	-	2	H.M.	PT.	-	2	12/A9.6	12/A9.6	-	(2)	B
M19A	3'-0"x7'-0"x1 3/4"	B	H.M.	PT.	-	2	H.M.	PT.	-	5	12/A9.6	12/A9.6	-	(2)	B
M20A	3'-0"x7'-0"x1 3/4"	E	H.M.	PT.	-	4	H.M.	PT.	-	4	2/A9.12 SIM.	2/A9.12 SIM.	5/A9.12	(1)	B
M22A	(2) 2'-0"x7'-0"x1 3/4"	E	H.M.	PT.	-	10	H.M.	PT.	-	10	12/A9.6	12/A9.6	-		-
M23A	3'-0"x7'-0"x1 3/4"	B	H.M.	PT.	-	2	H.M.	PT.	-	22	12/A9.6	12/A9.6	-	(2)	A,B
M24A	3'-0"x7'-0"x1 3/4"	D	H.M.	PT.	1/4" TEMP.	2	H.M.	PT.	-	12	12/A9.6	12/A9.6	-		B
M24B	3'-0"x7'-0"x1 3/4"	A	H.M.	PT.	1/4" TEMP.	4	H.M.	PT.	-	4	2/A9.12 SIM.	2/A9.12 SIM.	5/A9.12		B,E
M25A	(2) 3'-0"x7'-0"x1 3/4"	A	H.M.	PT.	1/4" TEMP.	6	H.M.	PT.	-	6	2/A9.12 SIM.	2/A9.12 SIM.	5/A9.12		C,E

REMARKS:
1. VERIFY LOUVER FREE AREA W/MECH.
2. 3/4" UNDERCUT AT DOOR BOTTOM.
3. CYLINDER KEYED TO MASTER
4. PEMKO THRESHOLD 272A 12'-0" L. (NOM.)

WINDOW SCHEDULE -

WINDOW NO.	WINDOW SIZE WxHx T.	MAT'L.	FIN.	GLAZING	LABEL (MIN.)	DETAILS			REMARKS
						HEAD	JAMB	SILL	
B	3'-3 1/2" x 3'-11 1/4"	ALUM.	PT.	1/4" TEMP.	-	4/A9.10	4/A9.10, SIM.	3/A9.10	
F	5'-11 1/2" x 5'-11 1/4"	ALUM.	PT.	1/4" TEMP.	-	4/A9.10	4/A9.10, SIM.	3/A9.10	
G	5'-11 1/2" x 3'-11 1/4"	ALUM.	PT.	1/4" TEMP.	-	4/A9.10	4/A9.10, SIM.	3/A9.10	
K	3'-3 1/2" x 3'-11 1/4"	ALUM.	PT.	TRANSLUC.	-	3/A9.15	3/A9.15, SIM.	3/A9.15	

ROOM FINISH SCHEDULE

ROOM NO	ROOM NAME	FLOOR	BASE	WAINSCOT (REF. ELEVS.)	WALLS	CEILING		NOTES* SEE BELOW SCHED
						MATERIAL	HEIGHT	
M01	MULTI-PURPOSE	RESIL. ATHLETIC	RUBBER	-	HI-IMPACT GYP. BD./PT.	ACOUS. STL. DECK/PT.	VARIES	(2) (3)
M02	SWING ROOM	RESIL. ATHLETIC	RUBBER	-	GYP. BD./PT.	GYP. BD./A.C.T.-1	10'-0"	
M03	LOCKERS	RESIL. ATHLETIC	RUBBER	-	GYP. BD./PT.	GYP. BD./PT.	10'-0"	
M04	STORAGE	SEALED CONC.	RUBBER	-	GYP. BD./PT.	GYP. BD./PT.	10'-0"	
M05	LOCKERS	RESIL. ATHLETIC	RUBBER	-	GYP. BD./PT.	GYP. BD./PT.	10'-0"	
M06	STORAGE	SEALED CONC.	RUBBER	-	GYP. BD./PT.	GYP. BD./PT.	10'-0"	
M07	STORAGE	SEALED CONC.	RUBBER	-	GYP. BD./PT.	GYP. BD./PT.	12'-0"	
M08	LIFT	V.C.T.	RUBBER	-	GYP. BD./PT.	A.C.T.-1	12'-0"	
M09	DRESSING	V.C.T.	RUBBER	-	GYP. BD./PT.	A.C.T.-3	10'-4"	(1)
M10	PLATFORM	WOOD	MFR. VENT	-	GYP. BD./PT.	A.C.T.-1	10'-4"	(3)
M11	STORAGE	SEALED CONC.	RUBBER	-	GYP. BD./PT.	GYP. BD./PT.	12'-0"	
M12	LOBBY	V.C.T.	RUBBER	-	GYP. BD./PT.	A.C.T.-3	12'-0"	(1)
M13	TOILET	TILE, CT-1	TILE, CT-1	TILE, CT-2	GYP. BD./PT.	GYP. BD./PT.	9'-0"	
M14	TOILET	TILE, CT-1	TILE, CT-1	TILE, CT-2	GYP. BD./PT.	GYP. BD./PT.	9'-0"	
M15	SPEED LINE	SHT. VINYL	SHT. VINYL	FRP	GYP. BD./PT.	A.C.T.-2	10'-0"	
M16	KITCHEN	SHT. VINYL	SHT. VINYL	-	GYP. BD./FRP	A.C.T.-2	9'-6"	
M17	OFFICE	SHT. VINYL	SHT. VINYL	-	GYP.BD./PT.	A.C.T.-2	9'-6"	
M18	DRY GOODS	SHT. VINYL	SHT. VINYL	-	GYP. BD./PT.	A.C.T.-2	9'-6"	
M19	JANITOR	SEALED CONC.	RUBBER	FRP	GYP. BD./PT.	GYP. BD./PT.	9'-0"	
M20	CAN WASH	SEALED CONC.	SEALED CONC.	-	GYP. BD./FRP	STRUCT./PT.	S.S.D.	
M21	DISHWASH	SHT. VINYL	SHT. VINYL	-	GYP. BD./FRP	A.C.T.-2	9'-6"	
M22	MECHANICAL	SHT. VINYL	SHT. VINYL	-	GYP. BD./PT.	GYP. BD./PT.	9'-0"	
M23	TOILET	SHT. VINYL	SHT. VINYL	-	GYP. BD./PT.	GYP. BD./PT.	9'-0"	
M24	COMMUNITY	CPT./V.C.T.	RUBBER	-	GYP. BD./PT.	A.C.T.-3	10'-0"	(1)
M25	LOBBY	V.C.T.	RUBBER	-	GYP. BD./PT.	A.C.T.-3	12'-0"	(1)

*NOTES: (1) GYP. BD. SUB-CLG. PER 6/A9.6
(2) 50% ACOUS. STL. DECK, 50% STL. DECK IN CHECKERBOARD PATTERN @ CEILING.
(3) MASONRY VENEER ASSEMBLY AT WALLS WHERE INDICATED ON BLDG. SECTIONS/PARTITION TYPES

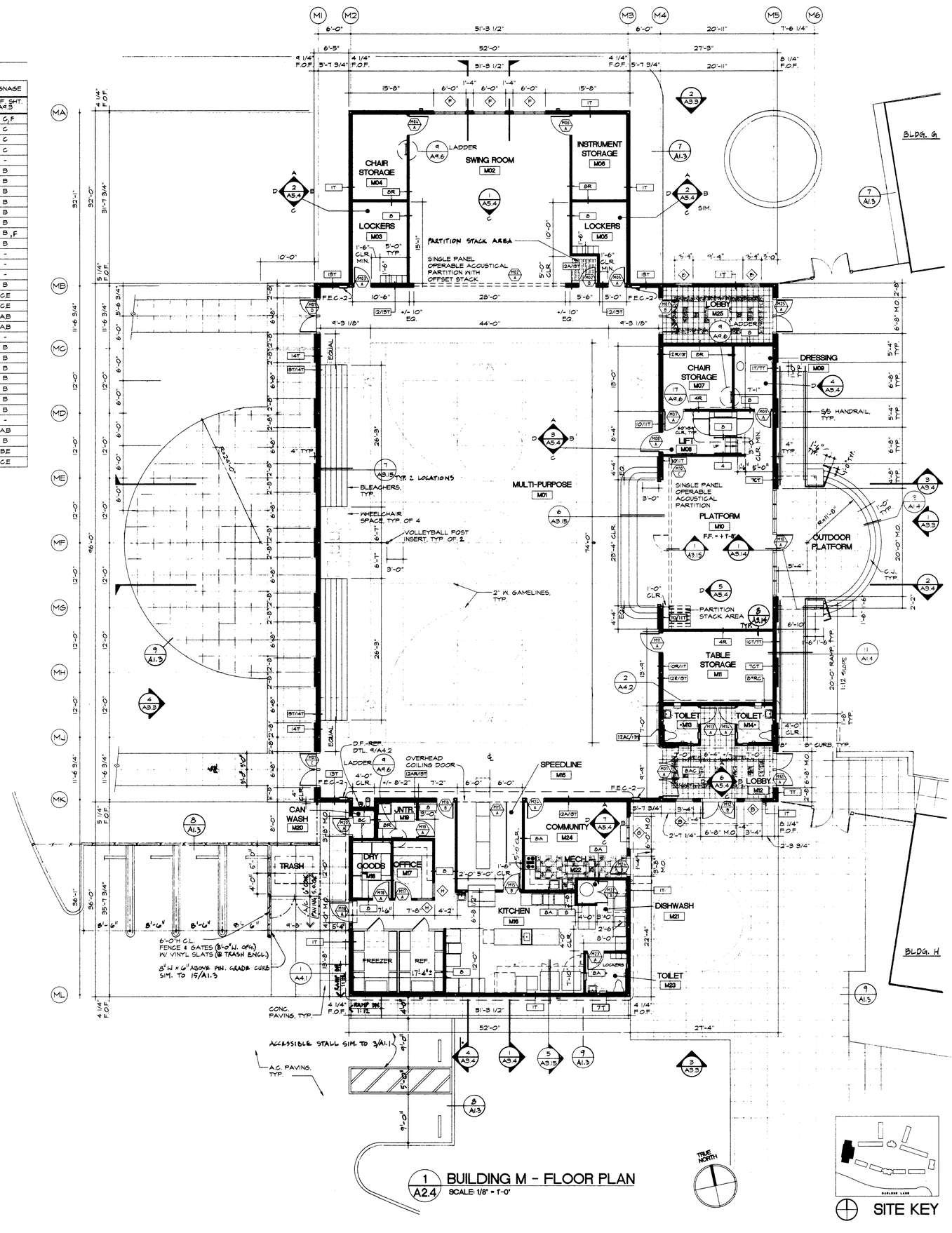

1 / A2.4 BUILDING M - FLOOR PLAN
SCALE: 1/8" = 1'-0"

SITE KEY

HKA
Harlan Krusemark - Architect
4415 Cowell Road, Suite 230
Concord, CA 94521
Tel: 925.681.1905
Fax: 925.681.1906

LICENSED ARCHITECT HARLAN KRUSEMARK No. C23833 Exp. 9/30/01 STATE OF CALIFORNIA

Revisions	Date

HAWKINS SCHOOL (INCREMENT #1)
475 Darlene Lane
Tracy, CA 95377

Jefferson School District
7500 West Linne Road
Tracy, CA 95304

DSA FILE NO. 39-39
IDENTIFICATION STAMP
DIVISION OF THE STATE ARCHITECT
APPL 02 -102225
AC
DATE

Sheet Title:
BUILDING M: MULTI-PURPOSE FLOOR PLAN, DOOR, WINDOW AND ROOM FINISH SCHEDULES

Printing Date / Purpose:
8/18/00 - DSA APPROVAL

Scale: 1/8" = 1'-0"
Project Number: 9903.00
Sheet Number:

A2.4

of Sheets

FILE: 9910/A2.4

COPYRIGHT © 2000 HARLAN KRUSEMARK - ARCHITECT (HKA) THESE DRAWINGS ARE PROPRIETARY DOCUMENTS OF HKA AND ARE NOT TO BE DISTRIBUTED, PUBLISHED OR REPRODUCED WITHOUT WRITTEN PERMISSION OF HKA.

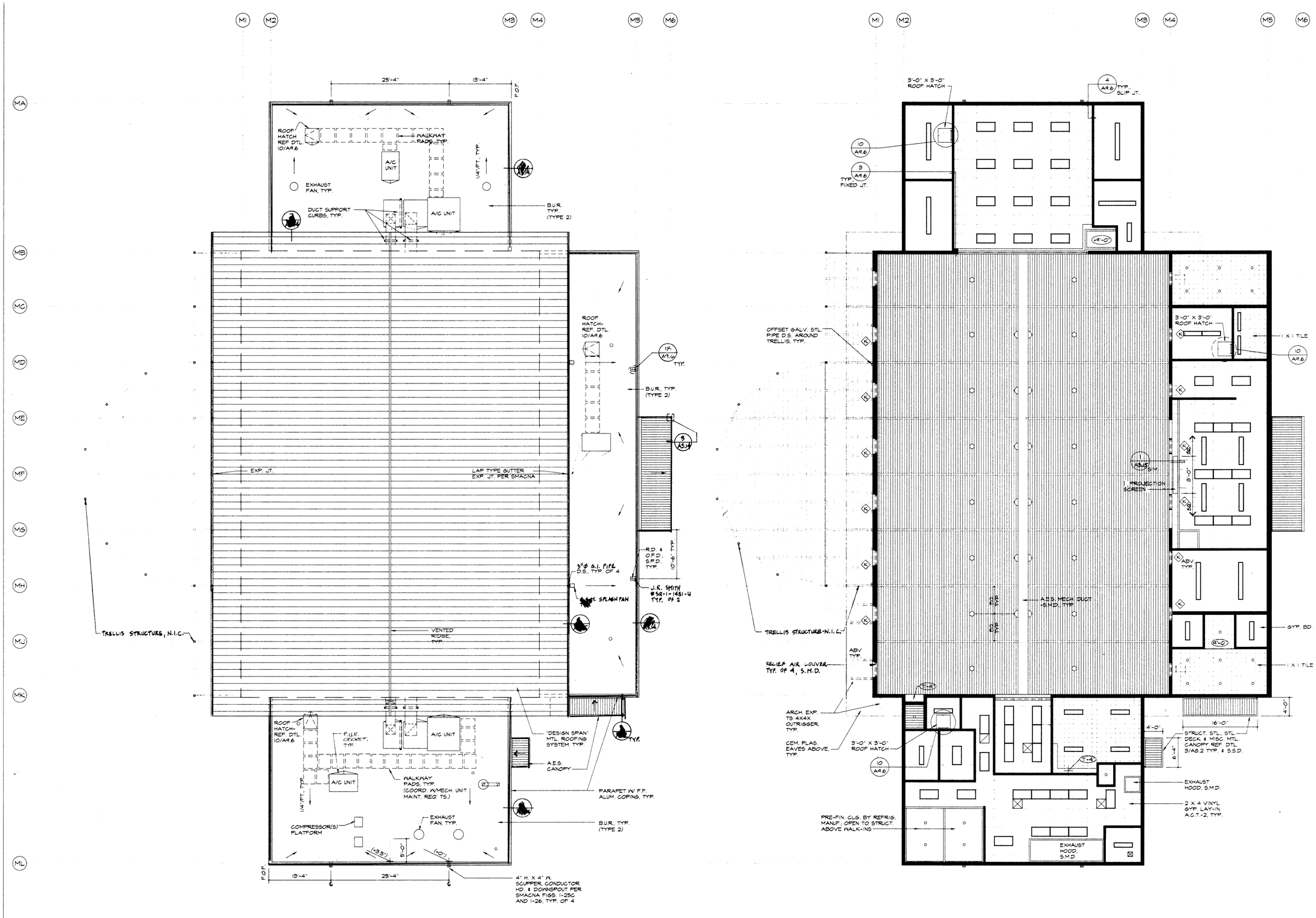

2 A2.5 BUILDING M - ROOF PLAN
SCALE: 1/8" = 1'-0"

1 A2.5 BUILDING M - REFLECTED CEILING PLAN
SCALE: 1/8" = 1'-0"

SITE KEY

HKA
Harlan Krusemark - Architect
4415 Cowell Road, Suite 230
Concord, CA 94521
Tel: 925.681.1905
Fax: 925.681.1906

LICENSED ARCHITECT HARLAN KRUSEMARK No. C23833 Exp. 9/30/01 STATE OF CALIFORNIA

Revisions	Date
△	
△	
△	
△	
△	
△	

HAWKINS SCHOOL
(INCREMENT #1)

475 Darlene Lane
Tracy, CA 95377

Jefferson School District
7500 West Linne Road
Tracy, CA 95304

DSA FILE NO. 39-39
IDENTIFICATION STAMP
DIVISION OF THE STATE ARCHITECT
APPL 02 -102225
AD FLS SS
DATE AUG 2 4 2010

Sheet Title:
BUILDING M: MULTI-PURPOSE REFLECTED CEILING PLAN AND ROOF PLAN

Printing Date / Purpose:
8/18/00 - DSA APPROVAL

Scale: 1/8" = 1'-0"
Project Number: 9903.00
Sheet Number:

A2.5

of Sheets

FILE: 9910/A2.5

COPYRIGHT © 2000 HARLAN KRUSEMARK - ARCHITECT (HKA) THESE DRAWINGS ARE PROPRIETARY DOCUMENTS OF HKA AND ARE NOT TO BE DISTRIBUTED, PUBLISHED OR REPRODUCED WITHOUT WRITTEN PERMISSION OF HKA.

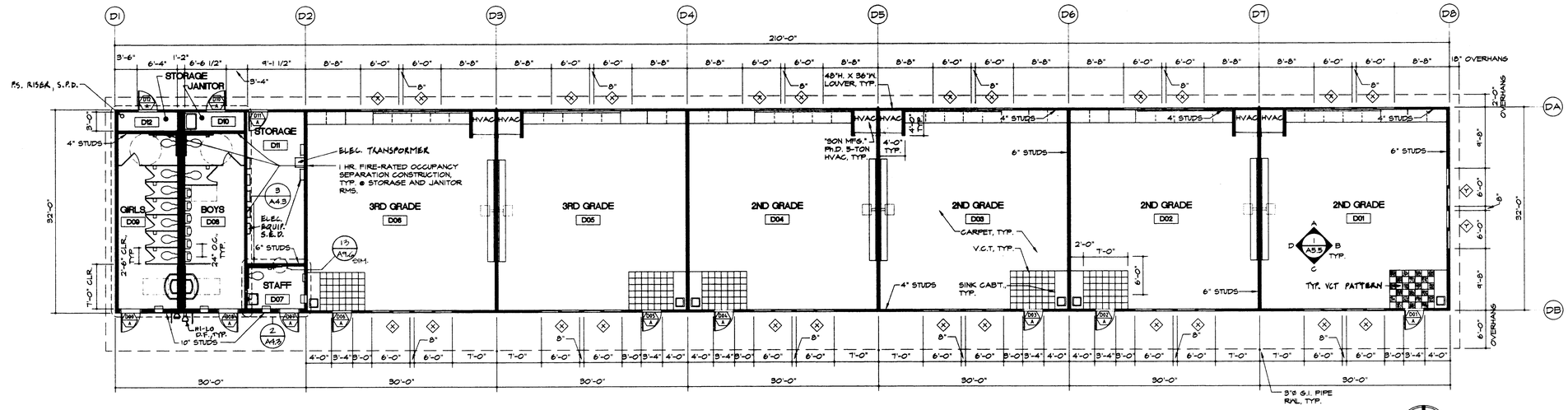

3 A2.6 BLDG. D: 2ND GRADE/3RD GRADE CLASSROOM BUILDING FLOOR PLAN

SCALE: 1/8" = 1'-0"

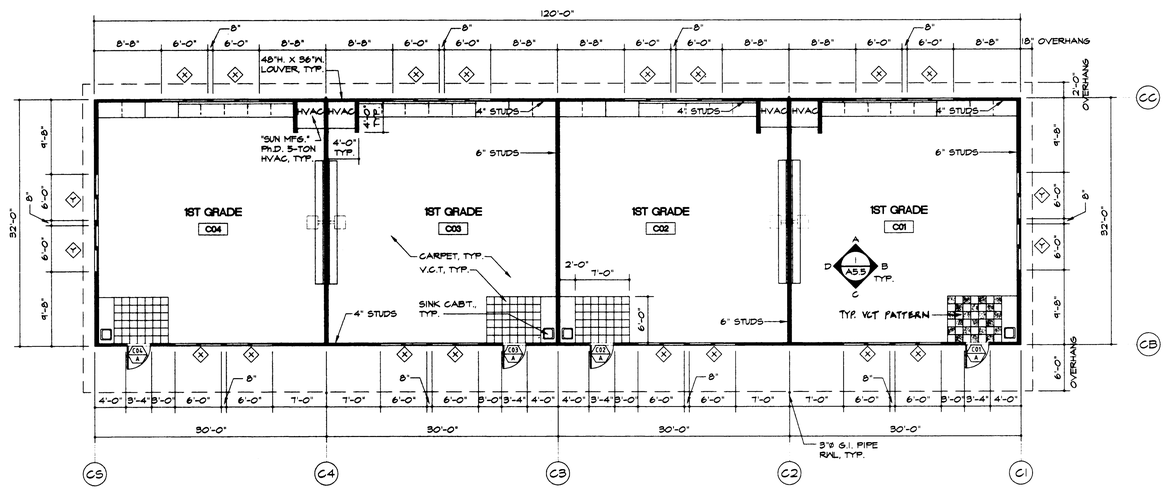

2 A2.6 BLDG. C: 1ST GRADE CLASSROOM BUILDING FLOOR PLAN

SCALE: 1/8" = 1'-0"

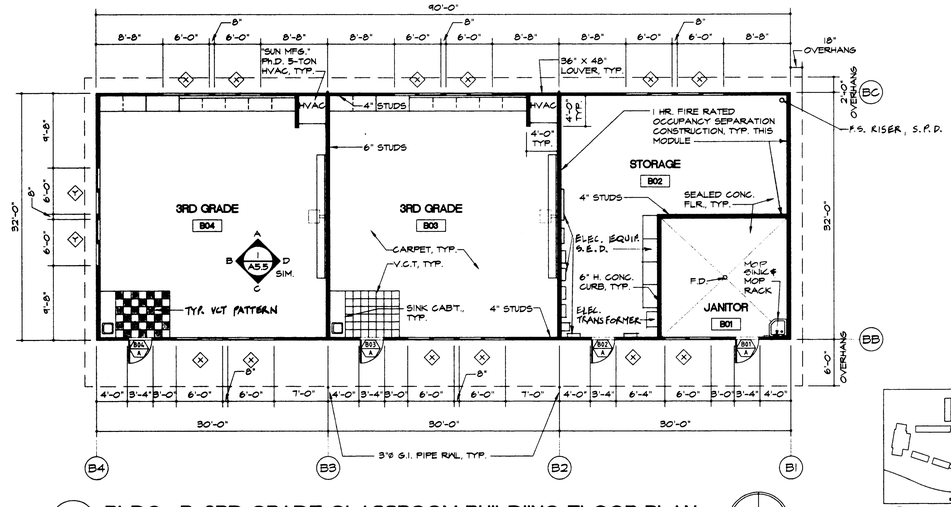

1 A2.6 BLDG. B: 3RD GRADE CLASSROOM BUILDIING FLOOR PLAN

SCALE: 1/8" = 1'-0"

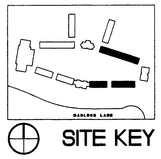

SITE KEY

DOOR SCHEDULE -

DOOR I.D.	DOOR SIZE W.xH.x T.	TYPE	MAT'L.	FIN.	GLAZING	FRAME TYPE	FRAME MAT'L.	FRAME FIN.	LABEL (MIN.)	HDWRE GROUP	DETAILS HEAD	DETAILS JAMB	DETAILS THRESH	REMARKS	SIGNAGE REF. A9.3
B01A	3'-0"x7'-0"x1 3/4"	E	H.M.	PT.	-	12	H.M.	PT.	-	19				DTLS. PER MODULAR BLDG. MFR.	B
B02A	3'-0"x7'-0"x1 3/4"	E	H.M.	PT.	-	12	H.M.	PT.	-	19				DTLS. PER MODULAR BLDG. MFR.	C
B03A	3'-0"x7'-0"x1 3/4"	D	H.M.	PT.	1/4" TEMP.	12	H.M.	PT.	-	7				DTLS. PER MODULAR BLDG. MFR.	B
B04A	3'-0"x7'-0"x1 3/4"	D	H.M.	PT.	1/4" TEMP.	12	H.M.	PT.	-	7				DTLS. PER MODULAR BLDG. MFR.	B
C01A	3'-0"x7'-0"x1 3/4"	D	H.M.	PT.	1/4" TEMP.	12	H.M.	PT.	-	7				DTLS. PER MODULAR BLDG. MFR.	B
C02A	3'-0"x7'-0"x1 3/4"	D	H.M.	PT.	1/4" TEMP.	12	H.M.	PT.	-	7				DTLS. PER MODULAR BLDG. MFR.	B
C03A	3'-0"x7'-0"x1 3/4"	D	H.M.	PT.	1/4" TEMP.	12	H.M.	PT.	-	7				DTLS. PER MODULAR BLDG. MFR.	B
C04A	3'-0"x7'-0"x1 3/4"	D	H.M.	PT.	1/4" TEMP.	12	H.M.	PT.	-	7				DTLS. PER MODULAR BLDG. MFR.	B
D01A	3'-0"x7'-0"x1 3/4"	D	H.M.	PT.	1/4" TEMP.	12	H.M.	PT.	-	7				DTLS. PER MODULAR BLDG. MFR.	B
D02A	3'-0"x7'-0"x1 3/4"	D	H.M.	PT.	1/4" TEMP.	12	H.M.	PT.	-	7				DTLS. PER MODULAR BLDG. MFR.	B
D03A	3'-0"x7'-0"x1 3/4"	D	H.M.	PT.	1/4" TEMP.	12	H.M.	PT.	-	7				DTLS. PER MODULAR BLDG. MFR.	B
D04A	3'-0"x7'-0"x1 3/4"	D	H.M.	PT.	1/4" TEMP.	12	H.M.	PT.	-	7				DTLS. PER MODULAR BLDG. MFR.	B
D05A	3'-0"x7'-0"x1 3/4"	D	H.M.	PT.	1/4" TEMP.	12	H.M.	PT.	-	7				DTLS. PER MODULAR BLDG. MFR.	B
D06A	3'-0"x7'-0"x1 3/4"	D	H.M.	PT.	1/4" TEMP.	12	H.M.	PT.	-	7				DTLS. PER MODULAR BLDG. MFR.	B
D07A	3'-0"x7'-0"x1 3/4"	E	H.M.	PT.	-	12	H.M.	PT.	-	16				DTLS. PER MODULAR BLDG. MFR.	A,B
D08A	3'-0"x7'-0"x1 3/4"	E	H.M.	PT.	-	12	H.M.	PT.	-	18				DTLS. PER MODULAR BLDG. MFR.	A,B
D09A	3'-0"x7'-0"x1 3/4"	E	H.M.	PT.	-	12	H.M.	PT.	-	18				DTLS. PER MODULAR BLDG. MFR.	A,B
D10A	3'-0"x7'-0"x1 3/4"	E	H.M.	PT.	-	12	H.M.	PT.		17				DTLS. PER MODULAR BLDG. MFR.	B
D11A	3'-0"x7'-0"x1 3/4"	E	H.M.	PT.	-	12	H.M.	PT.		17				DTLS. PER MODULAR BLDG. MFR.	B
D12A	3'-0"x7'-0"x1 3/4"	E	H.M.	PT.	-	12	H.M.	PT.	-	17				DTLS. PER MODULAR BLDG. MFR.	B

WINDOW SCHEDULE -

WINDOW NO.	WINDOW SIZE W.xH.	MAT'L.	FIN.	GLAZING	LABEL (MIN.)	DETAILS HEAD	DETAILS JAMB	DETAILS SILL	REMARKS
X	6'-0"x4'-0"	ALUM	PT.	1/4" TEMP.	-				DETAILS PER MODULAR BLDG. MFR.
Y	6'-0"x8'-0"	ALUM	PT.	1/4" TEMP.	-				DETAILS PER MODULAR BLDG. MFR.

ROOM FINISH SCHEDULE

ROOM NO.	ROOM NAME	FLOOR	BASE	WAINSCOT (REF. ELEVS.)	WALLS	CEILING MATERIAL	CEILING HEIGHT	NOTES
B01	JANITOR	SEALED CONC.	RUBBER	-	GYP. BD./PT.	GYP. BD.	9'-0"	
B02	STORAGE	SEALED CONC.	RUBBER	-	GYP. BD./PT.	A.C.T. - 1	VARIES	
B03	3RD GRADE	V.C.T. 7 & B/CPT.-4	RUBBER	-	V.T.P./GYP. BD.	A.C.T. - 1	VARIES	
B04	3RD GRADE	V.C.T. 7 & B/CPT.-4	RUBBER	-	V.T.P./GYP. BD.	A.C.T. - 1	VARIES	
C01	1ST GRADE	V.C.T. 7 & B/CPT.-4	RUBBER	-	V.T.P./GYP. BD.	A.C.T. - 1	VARIES	
C02	1ST GRADE	V.C.T. 7 & B/CPT.-4	RUBBER	-	V.T.P./GYP. BD.	A.C.T. - 1	VARIES	
C03	1ST GRADE	V.C.T. 7 & B/CPT.-4	RUBBER	-	V.T.P./GYP. BD.	A.C.T. - 1	VARIES	
C04	1ST GRADE	V.C.T. 7 & B/CPT.-4	RUBBER	-	V.T.P./GYP. BD.	A.C.T. - 1	VARIES	
D01	2ND GRADE	V.C.T. 7 & B/CPT.-4	RUBBER	-	V.T.P./GYP. BD.	A.C.T. - 1	VARIES	
D02	2ND GRADE	V.C.T. 7 & B/CPT.-4	RUBBER	-	V.T.P./GYP. BD.	A.C.T. - 1	VARIES	
D03	2ND GRADE	V.C.T. 7 & B/CPT.-4	RUBBER	-	V.T.P./GYP. BD.	A.C.T. - 1	VARIES	
D04	2ND GRADE	V.C.T. 7 & B/CPT.-4	RUBBER	-	V.T.P./GYP. BD.	A.C.T. - 1	VARIES	
D05	3RD GRADE	V.C.T. 7 & B/CPT.-4	RUBBER	-	V.T.P./GYP. BD.	A.C.T. - 1	VARIES	
D06	3RD GRADE	V.C.T. 7 & B/CPT.-4	RUBBER	-	V.T.P./GYP. BD.	A.C.T. - 1	VARIES	
D07	STAFF	CT-1	CT-1	CT-2	GYP. BD./PT.	GYP. BD.	9'-0"	
D08	BOYS	CT-5	CT-5	CT-4	GYP. BD./PT	GYP. BD.	9'-0"	
D09	GIRLS	CT-5	CT-5	CT-4	GYP. BD./PT	GYP. BD.	9'-0"	
D10	JANITOR	SEALED CONC.	RUBBER	-	GYP. BD./PT	GYP. BD.	9'-0"	
D11	STORAGE	SEALED CONC.	RUBBER	-	GYP. BD./PT	A.C.T. - 1	9'-0"	
D12	STORAGE	SEALED CONC.	RUBBER	-	GYP. BD./PT	GYP. BD.	9'-0"	

HKA
Harlan Krusemark - Architect
4415 Cowell Road, Suite 230
Concord, CA 94521
Tel: 925.681.1905
Fax: 925.681.1906

LICENSED ARCHITECT HARLAN KRUSEMARK No. C23833 Exp. 9/30/01 STATE OF CALIFORNIA

Revisions	Date

HAWKINS SCHOOL (INCREMENT #2)

475 Darlene Lane
Tracy, CA 95377

Jefferson School District
7500 West Linne Road
Tracy, CA 95304

DSA FILE NO. 39-39
IDENTIFICATION STAMP
DIVISION OF THE STATE ARCHITECT
APPL 02 -102225
AC ADM FS DK SS
DATE 4-1-3 2200

Sheet Title:
BUILDINGS B, C, AND D:
FLOOR PLANS
TYPICAL CLASSROOM REFLECTED CEILING PLAN

Printing Date / Purpose:
8/18/00 - DSA APPROVAL

Scale: 1/8" = 1'-0"
Project Number: 9903.00
Sheet Number:

A2.6

of Sheets

FILE: 9910/A2.6

COPYRIGHT © 2000 HARLAN KRUSEMARK - ARCHITECT (HKA) THESE DRAWINGS ARE PROPRIETARY DOCUMENTS OF HKA AND ARE NOT TO BE DISTRIBUTED, PUBLISHED OR REPRODUCED WITHOUT WRITTEN PERMISSION OF HKA.

DOOR SCHEDULE -

DOOR						FRAME					DETAILS			REMARKS	SIGNAGE
DOOR I.D.	DOOR SIZE W.xH.x T.	TYPE	MAT'L.	FIN.	GLAZING	TYPE	MAT'L.	FIN.	LABEL (MIN.)	HDWRE. GROUP	HEAD	JAMB	THRESH		(REF. A4.3)
E01A	3'-0"x7'-0"x1 3/4"	D	H.M.	PT.	1/4" TEMP.	12	H.M.	PT.	-	7				DTLS. PER MODULAR BLDG. MFR.	B
E02A	3'-0"x7'-0"x1 3/4"	D	H.M.	PT.	1/4" TEMP.	12	H.M.	PT.	-	7				DTLS. PER MODULAR BLDG. MFR.	B
E03A	3'-0"x7'-0"x1 3/4"	D	H.M.	PT.	1/4" TEMP.	12	H.M.	PT.	-	7				DTLS. PER MODULAR BLDG. MFR.	B
E04A	3'-0"x7'-0"x1 3/4"	D	H.M.	PT.	1/4" TEMP.	12	H.M.	PT.	-	7				DTLS. PER MODULAR BLDG. MFR.	B
F01A	3'-0"x7'-0"x1 3/4"	D	H.M.	PT.	1/4" TEMP.	12	H.M.	PT.	-	7				DTLS. PER MODULAR BLDG. MFR.	B
F02A	3'-0"x7'-0"x1 3/4"	D	H.M.	PT.	1/4" TEMP.	12	H.M.	PT.	-	7				DTLS. PER MODULAR BLDG. MFR.	B
F03A	3'-0"x7'-0"x1 3/4"	D	H.M.	PT.	1/4" TEMP.	12	H.M.	PT.	-	7				DTLS. PER MODULAR BLDG. MFR.	B
F04A	3'-0"x7'-0"x1 3/4"	D	H.M.	PT.	1/4" TEMP.	12	H.M.	PT.	-	7				DTLS. PER MODULAR BLDG. MFR.	B

WINDOW SCHEDULE -

WINDOW NO.	WINDOW SIZE W.xH.	MAT'L.	FIN.	GLAZING	LABEL (MIN.)	DETAILS			REMARKS
						HEAD	JAMB	SILL	
X	6'-0"x4'-0"	AL.	PT.	1/4" TEMP.	-				DETAILS PER MODULAR BLDG. MFR.
Y	6'-0"x8'-0"	AL.	PT.	1/4" TEMP.	-				DETAILS PER MODULAR BLDG. MFR.

ROOM FINISH SCHEDULE

ROOM NO.	ROOM NAME	FLOOR	BASE	WAINSCOT (REF. ELEVS.)	WALLS	CEILING		NOTES
						MATERIAL	HEIGHT	
E01	CLASSROOM	VCT-1 & 2/CPT-1	RUBBER	-	V.T.P./GYP. BD./PT.	A.C.T. - 1	VARIES	
E02	CLASSROOM	VCT-1 & 2/CPT.-1	RUBBER	-	V.T.P./GYP. BD./PT.	A.C.T. - 1	VARIES	
E03	CLASSROOM	VCT-1 & 2/CPT.-1	RUBBER	-	V.T.P./GYP. BD./PT.	A.C.T. - 1	VARIES	
E04	CLASSROOM	VCT-1 & 2/CPT.-1	RUBBER	-	V.T.P./GYP. BD./PT.	A.C.T. - 1	VARIES	
F01	SCIENCE CLASSROOM	V.C.T.-1 & 2	RUBBER	-	V.T.P./GYP. BD./PT.	A.C.T. - 1	VARIES	
F02	COMP. CLASSROOM	VCT-1 & 2/CPT.-1	RUBBER	-	V.T.P./GYP. BD./PT.	A.C.T. - 1	VARIES	
F03	CLASSROOM	VCT-1 & 2/CPT.-1	RUBBER	-	V.T.P./GYP. BD./PT.	A.C.T. - 1	VARIES	
F04	CLASSROOM	VCT-1 & 2/CPT.-1	RUBBER	-	V.T.P./GYP. BD./PT.	A.C.T. - 1	VARIES	
				-				

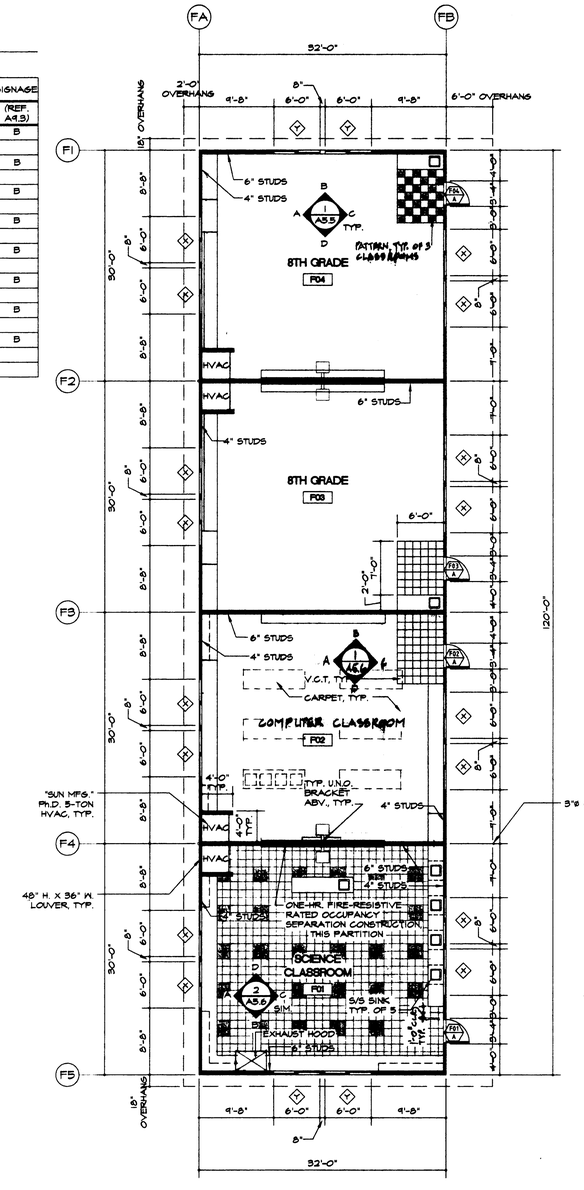

2 A2.7 BLDG. F: 8TH GRADE/SCIENCE CLASSROOM FLOOR PLAN (ADDITIVE ALTERNATE #1) 1/8" = 1'-0"

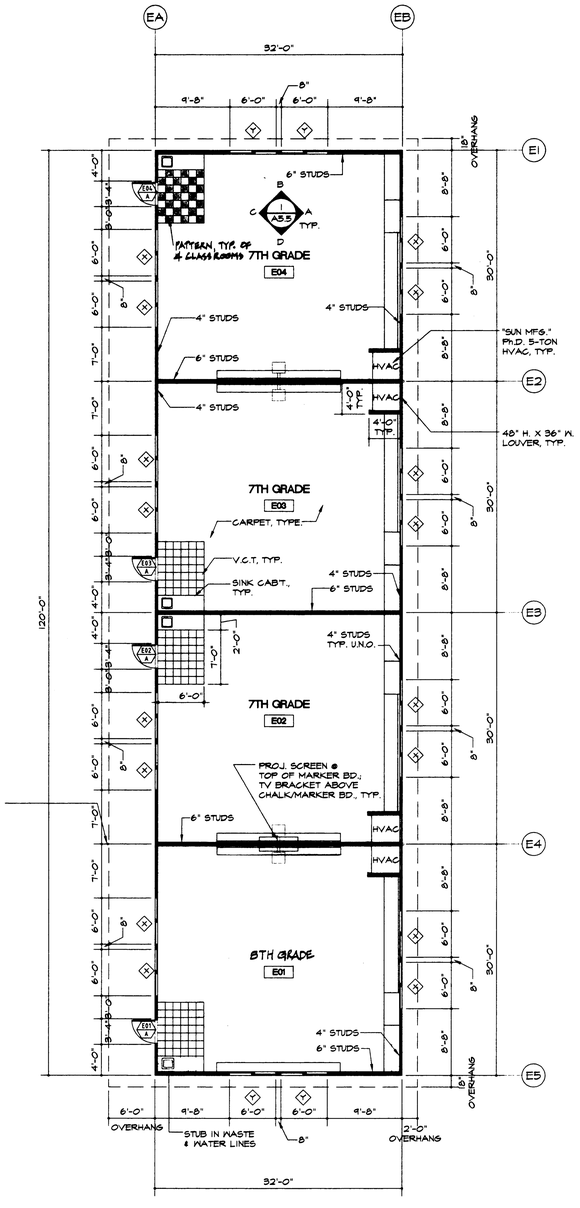

1 A2.7 BLDG. E: 7TH GRADE/COMPUTER CLASSROOM FLOOR PLAN (ADDITIVE ALTERNATE #2) 1/8" = 1'-0"

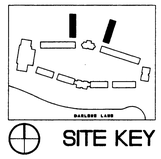

SITE KEY

HKA
Harlan Krusemark - Architect
4415 Cowell Road, Suite 230
Concord, CA 94521
Tel: 925.681.1905
Fax: 925.681.1906

LICENSED ARCHITECT HARLAN KRUSEMARK No. C23803 Exp. 9/30/01 STATE OF CALIFORNIA

Revisions	Date

HAWKINS SCHOOL (INCREMENT #2)

475 Darlene Lane
Tracy, CA 95377

Jefferson School District
7500 West Linne Road
Tracy, CA 95304

DSA FILE NO. 39-39
IDENTIFICATION STAMP
DIVISION OF THE STATE ARCHITECT
APPL 02 -102225
AC FLS SS
DATE AUG - 4 2000

Sheet Title:
BUILDINGS E AND F:
GRADES 7 AND 8
FLOOR PLANS

Printing Date / Purpose:
8/18/00 - DSA APPROVAL

Scale: 1/8" = 1'-0"
Project Number: 9903.00
Sheet Number:
A2.7
of Sheets

FILE: 9910/A2.7

COPYRIGHT © 2000 HARLAN KRUSEMARK - ARCHITECT (HKA) THESE DRAWINGS ARE PROPRIETARY DOCUMENTS OF HKA AND ARE NOT TO BE DISTRIBUTED, PUBLISHED OR REPRODUCED WITHOUT WRITTEN PERMISSION OF HKA.

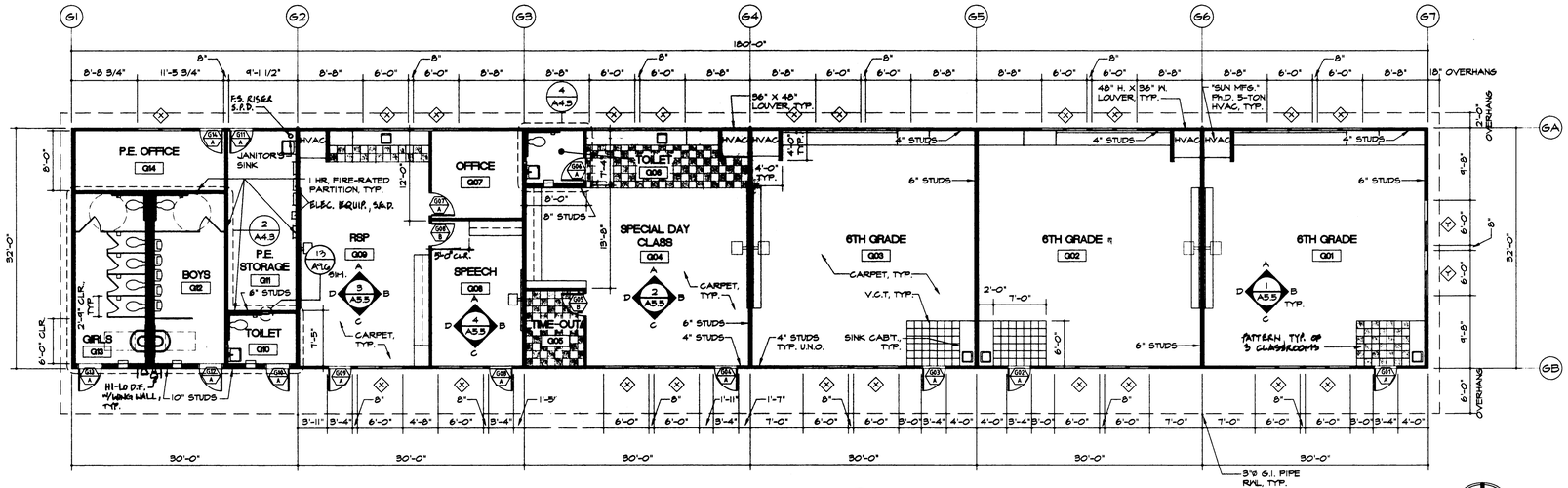

1 A2.8 BLDG. G: 6TH GRADE/SDC/RSP/TOILET FLOOR PLAN
SCALE: 1/8" = 1'-0"

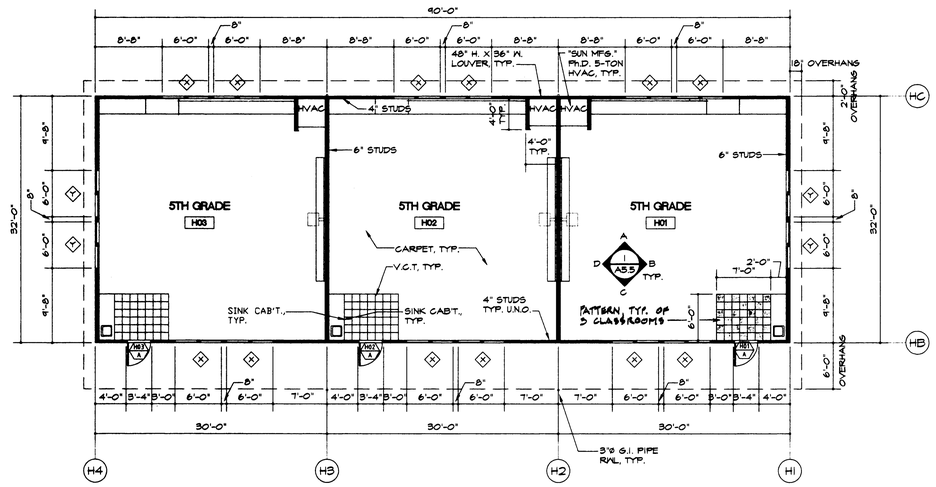

2 A2.8 BLDG. H: 5TH GRADE CLASSROOM BUILDING FLOOR PLAN
SCALE: 1/8" = 1'-0"

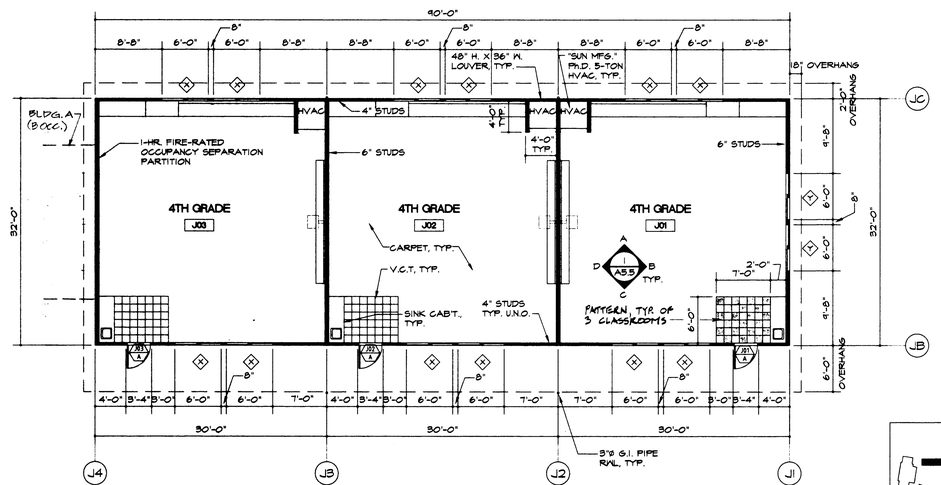

3 A2.8 BLDG. J: 4TH GRADE CLASSROOM BUILDING FLOOR PLAN
SCALE: 1/8" = 1'-0"

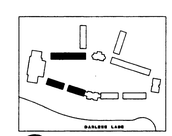

SITE KEY

DOOR SCHEDULE -

DOOR						FRAME					DETAILS			REMARKS	SIGNAGE
DOOR I.D.	DOOR SIZE W.xH.x T.	TYPE	MAT'L.	FIN.	GLAZING	TYPE	MAT'L.	FIN.	LABEL (MIN.)	HDWRE. GROUP	HEAD	JAMB	THRESH		(REF. A4.3)
601A	3'-0"x7'-0"x1 3/4"	D	H.M.	PT.	1/4" TEMP.	12	H.M.	PT.	-	7				DTLS. PER MODULAR BLDG. MFR.	B
602A	3'-0"x7'-0"x1 3/4"	D	H.M.	PT.	1/4" TEMP.	12	H.M.	PT.	-	7				DTLS. PER MODULAR BLDG. MFR.	B
603A	3'-0"x7'-0"x1 3/4"	D	H.M.	PT.	1/4" TEMP.	12	H.M.	PT.	-	7				DTLS. PER MODULAR BLDG. MFR.	B
604A	3'-0"x7'-0"x1 3/4"	D	H.M.	PT.	1/4" TEMP.	12	H.M.	PT.	-	7				DTLS. PER MODULAR BLDG. MFR.	B
605B	3'-0"x7'-0"x1 3/4"	C	WD.	PT.	1/4" TEMP.	12	H.M.	PT.	-	2				DTLS. PER MODULAR BLDG. MFR.	B
606A	3'-0"x7'-0"x1 3/4"	B	WD.	PT.	-	12	H.M.	PT.	-	19				DTLS. PER MODULAR BLDG. MFR.	A,B
607A	3'-0"x7'-0"x1 3/4"	C	WD.	PT.	1/4" TEMP.	12	H.M.	PT.	-	3				DTLS. PER MODULAR BLDG. MFR.	B
608A	3'-0"x7'-0"x1 3/4"	D	WD.	PT.	1/4" TEMP.	12	H.M.	PT.	-	7				DTLS. PER MODULAR BLDG. MFR.	C
608B	3'-0"x7'-0"x1 3/4"	C	H.M.	PT.	1/4" TEMP.	12	H.M.	PT.	-	2				DTLS. PER MODULAR BLDG. MFR.	B
609A	3'-0"x7'-0"x1 3/4"	D	H.M.	PT.	1/4" TEMP.	12	H.M.	PT.	-	7				DTLS. PER MODULAR BLDG. MFR.	C
610A	3'-0"x7'-0"x1 3/4"	E	H.M.	PT.	-	12	H.M.	PT.	-	16				DTLS. PER MODULAR BLDG. MFR.	A,B
611A	3'-0"x7'-0"x1 3/4"	E	H.M.	PT.	-	12	H.M.	PT.	-	17				DTLS. PER MODULAR BLDG. MFR.	B
612A	3'-0"x7'-0"x1 3/4"	E	H.M.	PT.	-	12	H.M.	PT.	-	18				DTLS. PER MODULAR BLDG. MFR.	A,B
613A	3'-0"x7'-0"x1 3/4"	E	H.M.	PT.	-	12	H.M.	PT.	-	18				DTLS. PER MODULAR BLDG. MFR.	A,B
614A	3'-0"x7'-0"x1 3/4"	C	H.M.	PT.	1/4" TEMP.	12	H.M.	PT.	-	17				DTLS. PER MODULAR BLDG. MFR.	B
H01A	3'-0"x7'-0"x1 3/4"	D	H.M.	PT.	1/4" TEMP.	12	H.M.	PT.	-	7				DTLS. PER MODULAR BLDG. MFR.	B
H02A	3'-0"x7'-0"x1 3/4"	D	H.M.	PT.	1/4" TEMP.	12	H.M.	PT.	-	7				DTLS. PER MODULAR BLDG. MFR.	B
H03A	3'-0"x7'-0"x1 3/4"	D	H.M.	PT.	1/4" TEMP.	12	H.M.	PT.	-	7				DTLS. PER MODULAR BLDG. MFR.	B
J01A	3'-0"x7'-0"x1 3/4"	D	H.M.	PT.	1/4" TEMP.	12	H.M.	PT.	-	7				DTLS. PER MODULAR BLDG. MFR.	B
J02A	3'-0"x7'-0"x1 3/4"	D	H.M.	PT.	1/4" TEMP.	12	H.M.	PT.	-	7				DTLS. PER MODULAR BLDG. MFR.	B
J03A	3'-0"x7'-0"x1 3/4"	D	H.M.	PT.	1/4" TEMP.	12	H.M.	PT.	-	7				DTLS. PER MODULAR BLDG. MFR.	B

WINDOW SCHEDULE -

WINDOW NO.	WINDOW SIZE W.xH.	MAT'L.	FIN.	GLAZING	LABEL (MIN.)	DETAILS HEAD	DETAILS JAMB	DETAILS SILL	REMARKS
X	6'-0"x4'-0"	ALUM	PT.	1/4" TEMP.	-				DTLS. PER MODULAR BLDG. MFR.; REF. ELEVS. A4.3
Y	6'-0"x8'-0"	ALUM	PT.	1/4" TEMP.	-				DTLS. PER MODULAR BLDG. MFR.; REF. ELEVS. A4.3

ROOM FINISH SCHEDULE

ROOM NO.	ROOM NAME	FLOOR	BASE	WAINSCOT (REF. ELEVS.)	WALLS	CEILING MATERIAL	CEILING HEIGHT	NOTES
601	6TH GRADE	V.C.T. 5/6 w/CPT.-5	RUBBER	-	V.T.P./GYP.BD	A.C.T. - 1	VARIES	
602	6TH GRADE	V.C.T. 5/6 w/CPT.-5	RUBBER	-	V.T.P./GYP.BD	A.C.T. - 1	VARIES	
603	6TH GRADE	V.C.T. 5/6 w/CPT.-5	RUBBER	-	V.T.P./GYP.BD	A.C.T. - 1	VARIES	
604	SPEC. DAY CLASS	V.C.T. 5/6 w/CPT.-5	RUBBER	-	V.T.P./GYP.BD	A.C.T. - 1	VARIES	
605	TIME-OUT	V.C.T.-5/6	RUBBER	-	V.T.P./GYP.BD	A.C.T. - 1	9'-0"	
606	TOILET ROOM	CT-1	CT-1	CT-2	GYP. BD./PT.	GYP. BD.	9'-0"	
607	OFFICE	CPT.-5	RUBBER	-	GYP. BD./PT.	A.C.T. - 1	9'-0"	
608	SPEECH ROOM	CPT.-5	RUBBER	-	V.T.P./GYP.BD	A.C.T. - 1	9'-0"	
609	RSP	V.C.T. 5/6 w/CPT.-5	RUBBER	-	V.T.P./GYP.BD	A.C.T. - 1	VARIES	
610	TOILET	CT-1	CT-1	CT-2	GYP. BD./PT.	GYP. BD.	9'-0"	
611	P.E. STORAGE	SEALED CONC.	RUBBER	-	GYP. BD./PT.	A.C.T. - 1	9'-0"	
612	BOYS	CT-5	CT-5	CT-4	GYP. BD./PT.	GYP. BD.	9'-0"	
613	GIRLS	CT-5	CT-5	CT-4	GYP. BD./PT	GYP. BD.	9'-0"	
614	P.E. OFFICE	V.C.T.-5/6	RUBBER	-	GYP. BD./PT	A.C.T. - 1	9'-0"	
H01	5TH GRADE	V.C.T. 5/6 w/CPT.-5	RUBBER	-	V.T.P./GYP.BD	A.C.T. - 1	VARIES	
H02	5TH GRADE	V.C.T. 5/6 w/CPT.-5	RUBBER	-	V.T.P./GYP.BD	A.C.T. - 1	VARIES	
H03	5TH GRADE	V.C.T. 5/6 w/CPT.-5	RUBBER	-	V.T.P./GYP.BD	A.C.T. - 1	VARIES	
J01	4TH GRADE	V.C.T. 5/6 w/CPT.-5	RUBBER	-	V.T.P./GYP.BD	A.C.T. - 1	VARIES	
J02	4TH GRADE	V.C.T. 5/6 w/CPT.-5	RUBBER	-	V.T.P./GYP.BD	A.C.T. - 1	VARIES	
J03	4TH GRADE	V.C.T. 5/6 w/CPT.-5	RUBBER	-	V.T.P./GYP.BD	A.C.T. - 1	VARIES	

HKA
Harlan Krusemark - Architect
4415 Cowell Road, Suite 230
Concord, CA 94521
Tel: 925.681.1905
Fax: 925.681.1906

LICENSED ARCHITECT HARLAN KRUSEMARK No. C23833 Exp. 9/30/01 STATE OF CALIFORNIA

Revisions	Date

HAWKINS SCHOOL (INCREMENT #2)

475 Darlene Lane
Tracy, CA 95377

Jefferson School District
7500 West Linne Road
Tracy, CA 95304

DSA FILE NO. 39-39
IDENTIFICATION STAMP
DIVISION OF THE STATE ARCHITECT
APPL 02 -102225
AC FLS SS
DATE AUG 4 2000

Sheet Title:
BUILDINGS G, H, AND J:
GRADES 6, 5, AND 4
FLOOR PLANS

Printing Date / Purpose:
8/18/00 - DSA APPROVAL

Scale: 1/8" = 1'-0"
Project Number: 9903.00
Sheet Number:

A2.8

of Sheets

FILE: 9910/A2.8

COPYRIGHT © 2000 HARLAN KRUSEMARK - ARCHITECT (HKA) THESE DRAWINGS ARE PROPRIETARY DOCUMENTS OF HKA AND ARE NOT TO BE DISTRIBUTED, PUBLISHED OR REPRODUCED WITHOUT WRITTEN PERMISSION OF HKA.

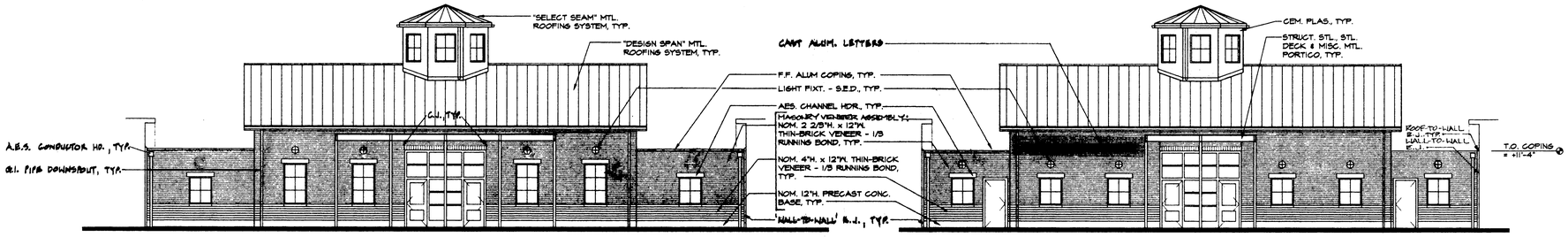

1 A3.1 BLDG. A: SOUTH ELEVATION (@ ENTRY)
SCALE: 1/8"= 1'-0"

2 A3.1 BLDG. A: NORTH ELEVATION (@ COURYARD)
SCALE: 1/8"= 1'-0"

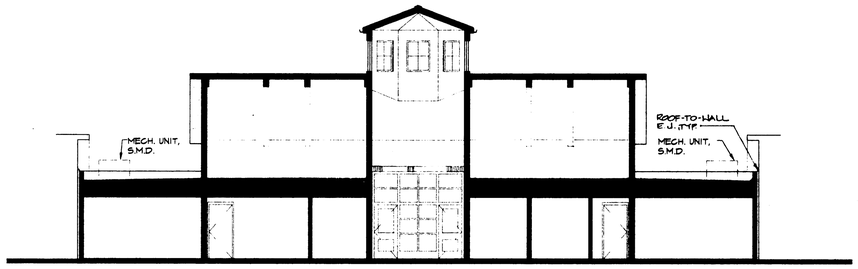

3 A3.1 BLDG. A: W.-E. LONGITUDINAL SECTION
SCALE: 1/8"= 1'-0"

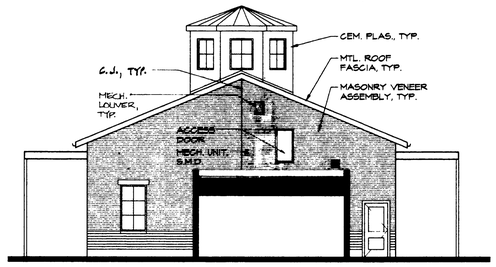

4 A3.1 BLDG. A: EAST ELEVATION / S.-N. SECTION (WEST ELEV.-SIM.)
SCALE: 1/8"= 1'-0"

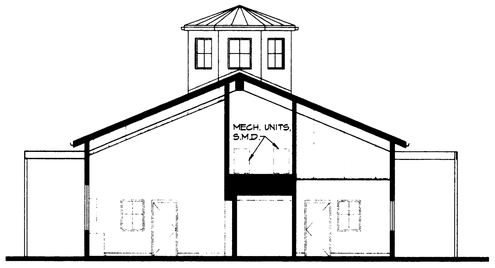

5 A3.1 BLDG. A: S.-N. SECTION (@ STAFF LOUNGE)
SCALE: 1/8"= 1'-0"

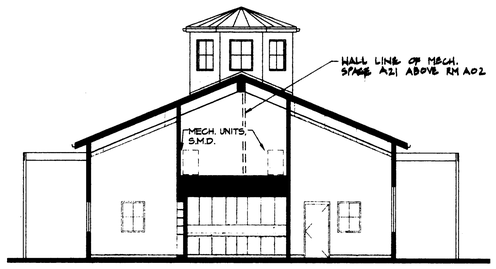

6 A3.1 BLDG. A: N.-S. SECTION (@ PRINCIPAL'S OFFICE)
SCALE: 1/8"= 1'-0"

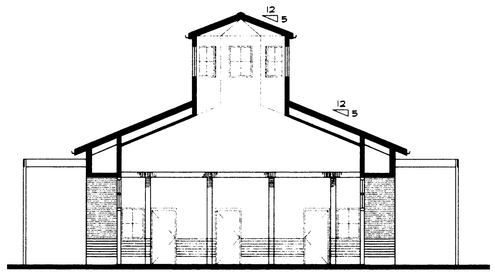

7 A3.1 BLDG. A: S.-N. SECTION (@ ENTRY)
SCALE: 1/8"= 1'-0"

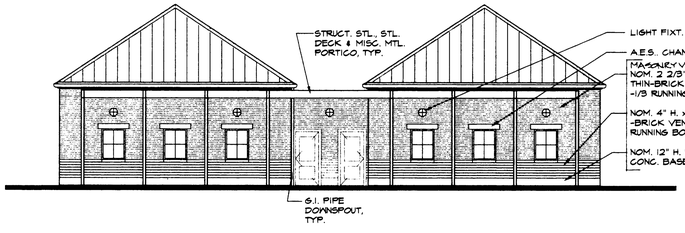

8 A3.1 BLDG. K: WEST ELEVATION (@ COURTYARD)
SCALE: 1/8"= 1'-0"

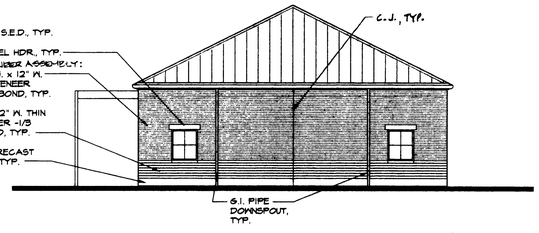

9 A3.1 BLDG. K: SOUTH ELEVATION (NORTH, SIM. OPP. HAND)
SCALE: 1/8"= 1'-0"

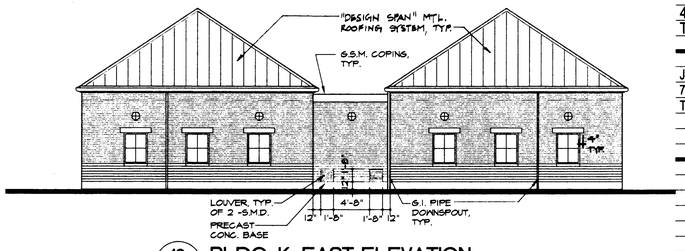

10 A3.1 BLDG. K: EAST ELEVATION
SCALE: 1/8"= 1'-0"

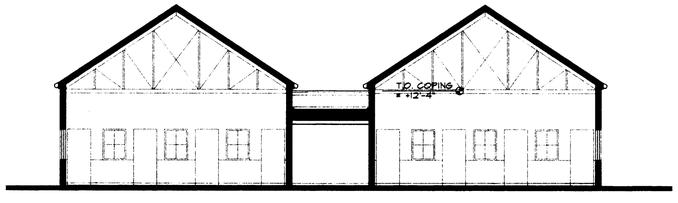

11 A3.1 BLDG. K: S.-N. SECTION (@ CLASSROOMS)
SCALE: 1/8"= 1'-0"

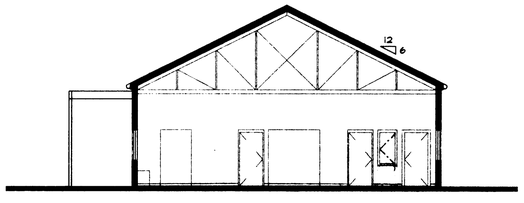

12 A3.1 BLDG. K: W.-E. SECTION (@ CLASSROOM)
SCALE: 1/8"= 1'-0"

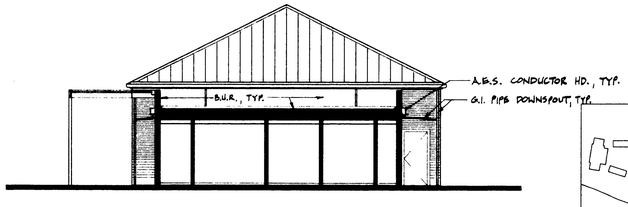

13 A3.1 BLDG. K: W.-E. SECTION (@ ENTRY/TOILETS)
SCALE: 1/8"= 1'-0"

SITE KEY

COPYRIGHT © 2000 HARLAN KRUSEMARK - ARCHITECT (HKA) THESE DRAWINGS ARE PROPRIETARY DOCUMENTS OF HKA AND ARE NOT TO BE DISTRIBUTED, PUBLISHED OR REPRODUCED WITHOUT WRITTEN PERMISSION OF HKA.

HKA
Harlan Krusemark - Architect
4415 Cowell Road, Suite 230
Concord, CA 94521
Tel: 925.681.1905
Fax: 925.681.1906

LICENSED ARCHITECT HARLAN KRUSEMARK No. C23833 Exp. 9/30/01 STATE OF CALIFORNIA

Revisions	Date

HAWKINS SCHOOL
(INCREMENT #1)

475 Darlene Lane
Tracy, CA 95377

Jefferson School District
7500 West Linne Road
Tracy, CA 95304

DSA FILE NO. 39-39
IDENTIFICATION STAMP
DIVISION OF THE STATE ARCHITECT
APPL 02 -102225
AC FLS SS
DATE AUG 2 2000

Sheet Title:
BUILDING A: ADMINISTRATION
BUILDING K: KINDERGARTEN
ELEVATIONS & SECTIONS

Printing Date / Purpose:
8/18/00 - DSA APPROVAL

Scale: 1/8" = 1'-0"
Project Number: 9903.00
Sheet Number:

A3.1

of Sheets

FILE: 9910A3.1

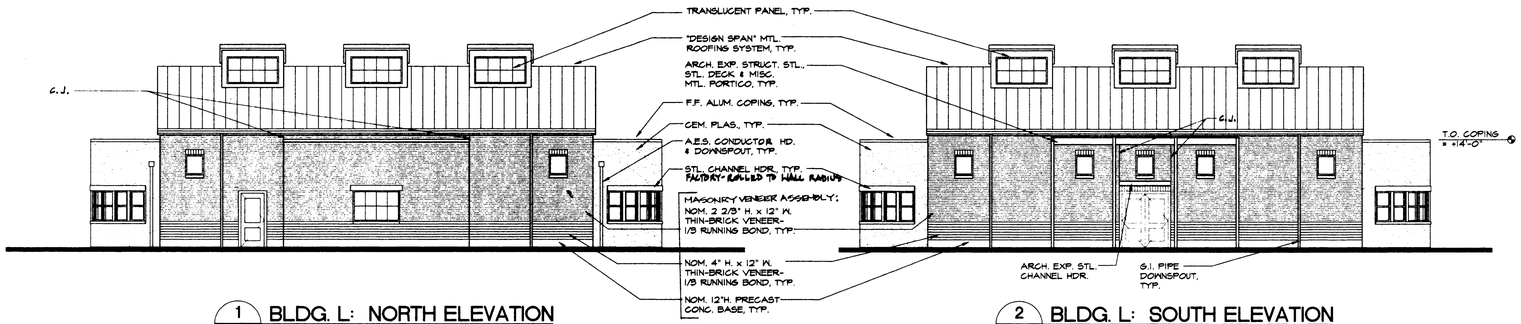

1 A3.2 BLDG. L: NORTH ELEVATION
SCALE: 1/8" = 1'-0"

2 A3.2 BLDG. L: SOUTH ELEVATION
SCALE: 1/8" = 1'-0"

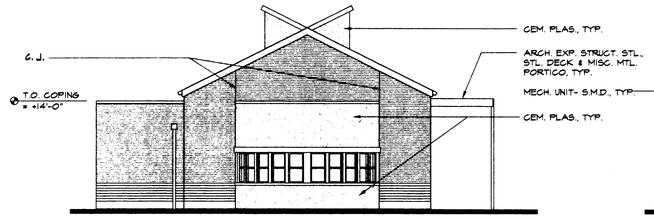

3 A3.2 BLDG. L: WEST ELEVATION (EAST SIM. OPP. HAND)
SCALE: 1/8" = 1'-0"

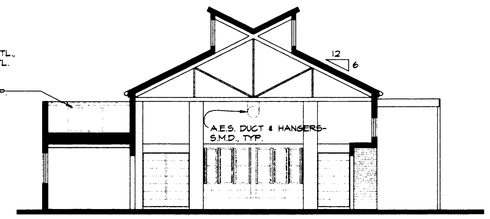

4 A3.2 BLDG. L: N.-S. SECTION
SCALE: 1/8" = 1'-0"

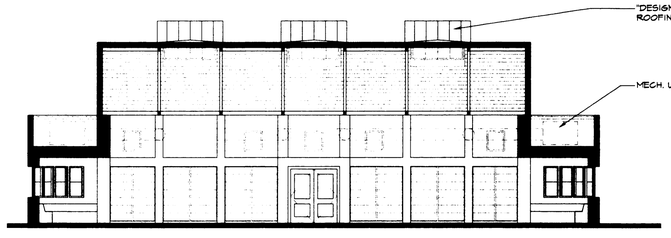

5 A3.2 BLDG. L: E.-W. SECTION
SCALE: 1/8" = 1'-0"

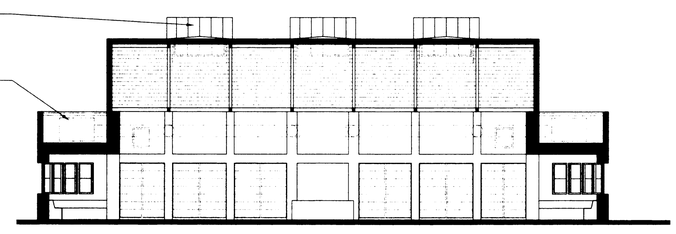

6 A3.2 BLDG. L: W.-E. SECTION
SCALE: 1/8" = 1'-0"

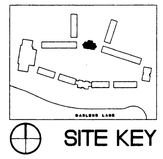

SITE KEY

HKA
Harlan Krusemark - Architect
4415 Cowell Road, Suite 230
Concord, CA 94521
Tel: 925.681.1905
Fax: 925.681.1906

LICENSED ARCHITECT HARLAN KRUSEMARK No. C23833 Exp. 9/30/01 STATE OF CALIFORNIA

Revisions	Date

HAWKINS SCHOOL
(INCREMENT #1)

475 Darlene Lane
Tracy, CA 95377

Jefferson School District
7500 West Linne Road
Tracy, CA 95304

DSA FILE NO. 39-39
IDENTIFICATION STAMP
DIVISION OF THE STATE ARCHITECT
APPL 02 - 102225
AC FLS SS
DATE

Sheet Title:
BUILDING L: LIBRARY
ELEVATIONS AND SECTIONS

Printing Date / Purpose:
8/18/00 - DSA APPROVAL

Scale: 1/8" = 1'-0"
Project Number: 9903.00
Sheet Number:

A3.2

of Sheets

FILE: 9910/A3.2

COPYRIGHT © 2000 HARLAN KRUSEMARK - ARCHITECT (HKA) THESE DRAWINGS ARE PROPRIETARY DOCUMENTS OF HKA AND ARE NOT TO BE DISTRIBUTED, PUBLISHED OR REPRODUCED WITHOUT WRITTEN PERMISSION OF HKA.

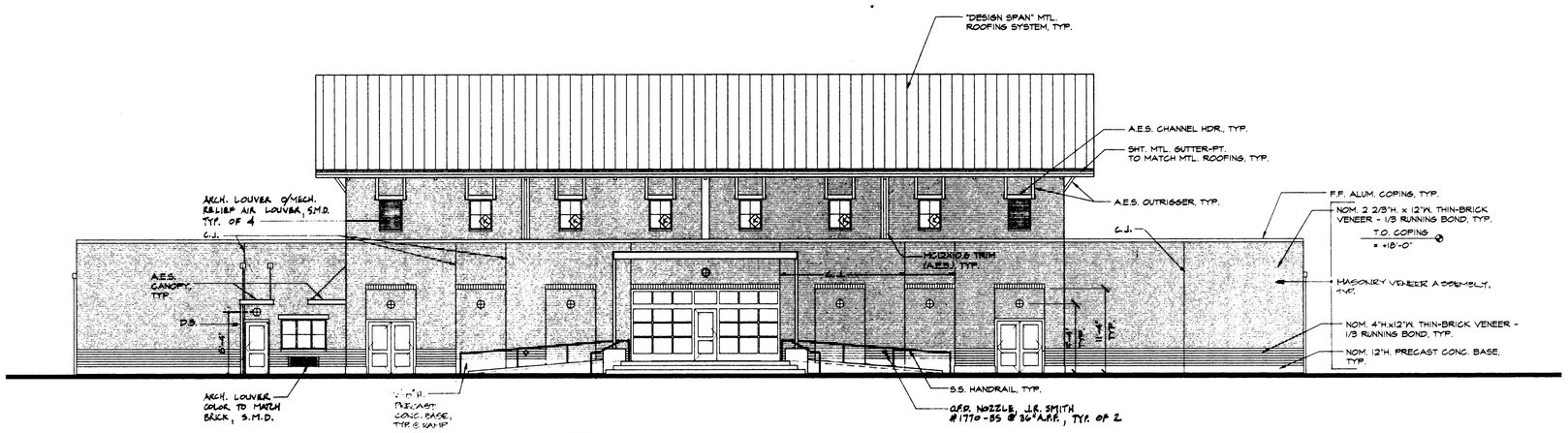

1 / A3.3 BLDG. M: EAST ELEVATION
SCALE: 1/8" = 1'-0"

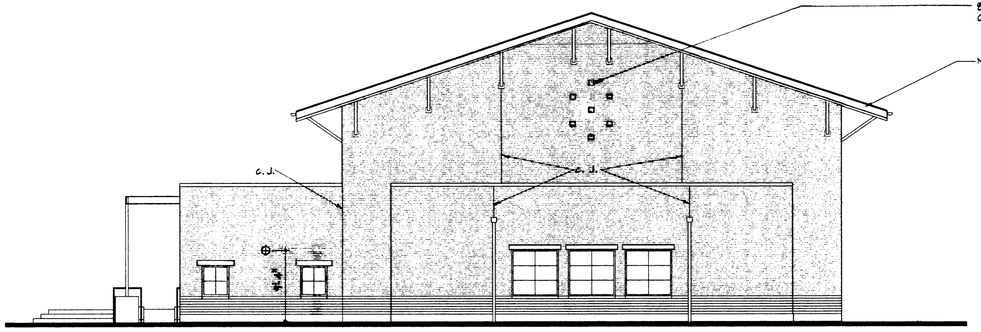

2 / A3.3 BLDG. M: NORTH ELEVATION
SCALE: 1/8" = 1'-0"

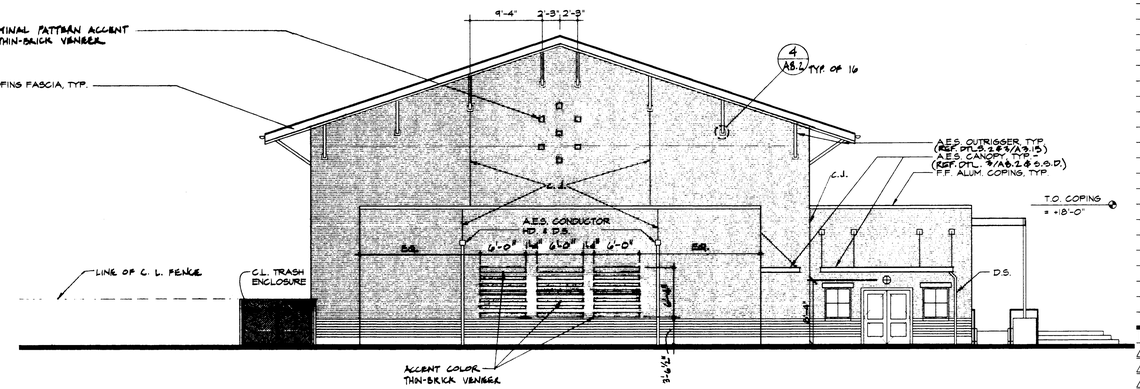

3 / A3.3 BLDG. M: SOUTH ELEVATION
SCALE: 1/8" = 1'-0"

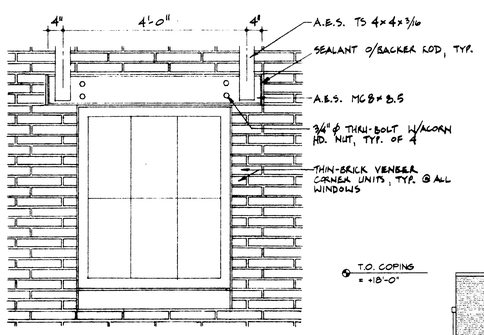

5 / A3.3 WINDOW TYPE K ELEV.
SCALE: 3/4" = 1'-0" (SIM. @ ARCH. LOUVER)

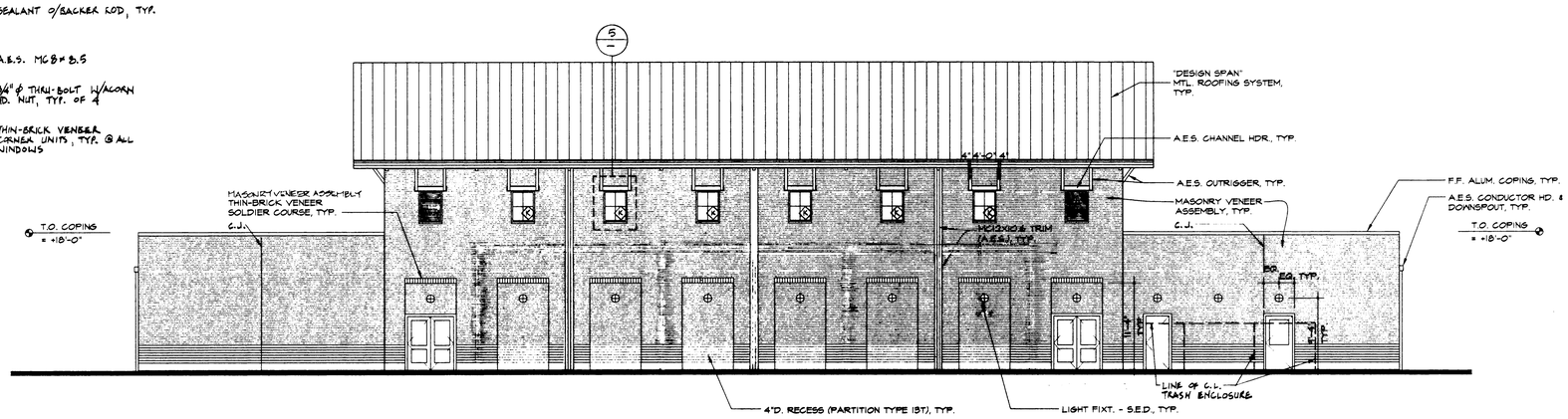

4 / A3.3 BLDG. M: WEST ELEVATION
SCALE: 1/8" = 1'-0"

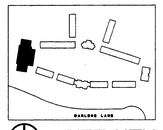

SITE KEY

HKA
Harlan Krusemark - Architect
4415 Cowell Road, Suite 230
Concord, CA 94521
Tel: 925.681.1905
Fax: 925.681.1906

LICENSED ARCHITECT HARLAN KRUSEMARK No. C23833 Exp. 9/30/01 STATE OF CALIFORNIA

Revisions	Date

HAWKINS SCHOOL (INCREMENT #1)

475 Darlene Lane
Tracy, CA 95377

Jefferson School District
7500 West Linne Road
Tracy, CA 95304

DSA FILE NO. 39-39
IDENTIFICATION STAMP
DIVISION OF THE STATE ARCHITECT
APPL 02-102225
AC FLS SS
DATE

Sheet Title:
BUILDING M: MULTI-PURPOSE ELEVATIONS

Printing Date / Purpose:
8/18/00 - DSA APPROVAL

Scale: 1/8" = 1'-0"
Project Number: 9903.00
Sheet Number:

A3.3

of Sheets

FILE: 9910/A3.3

COPYRIGHT © 2000 HARLAN KRUSEMARK - ARCHITECT (HKA) THESE DRAWINGS ARE PROPRIETARY DOCUMENTS OF HKA AND ARE NOT TO BE DISTRIBUTED, PUBLISHED OR REPRODUCED WITHOUT WRITTEN PERMISSION OF HKA.

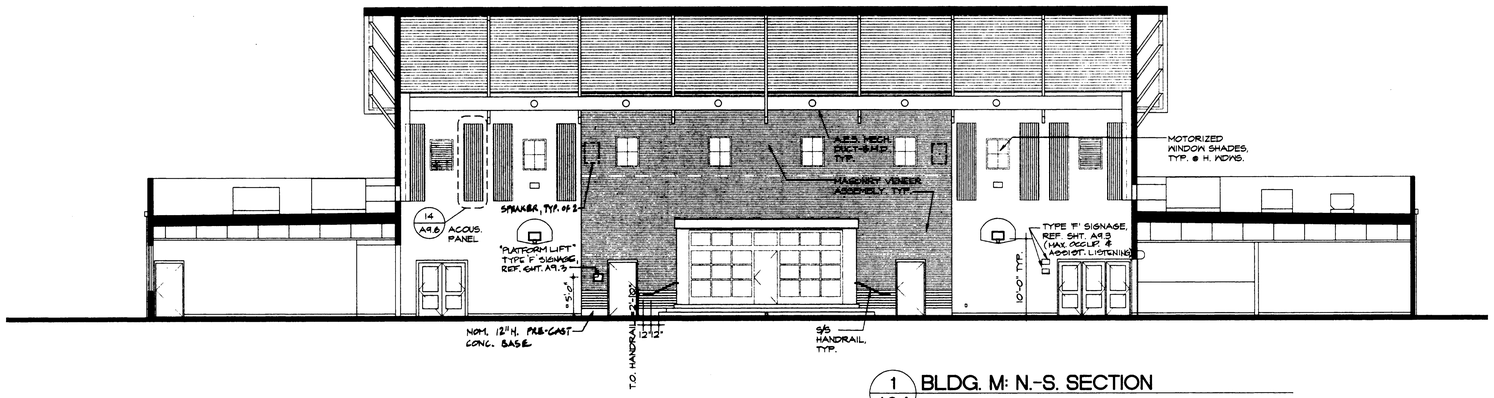

1 A3.4 BLDG. M: N.-S. SECTION

SCALE: 1/8"=1'-0"

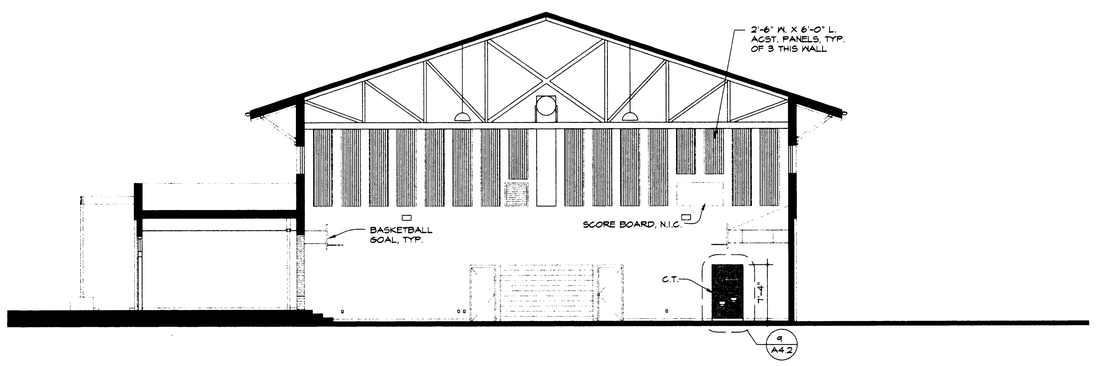

2 A3.4 BLDG. M: E.-W. SECTION

SCALE: 1/8"=1'-0"

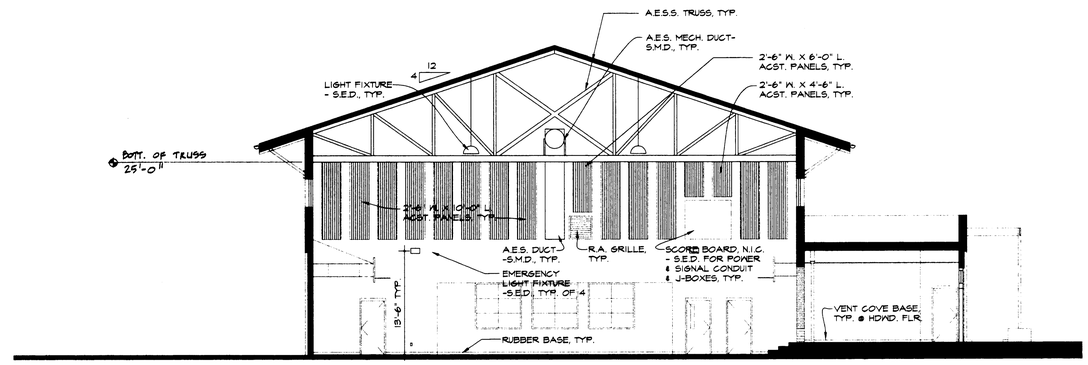

3 A3.4 BLDG. M: W.-E. SECTION

SCALE: 1/8"=1'-0"

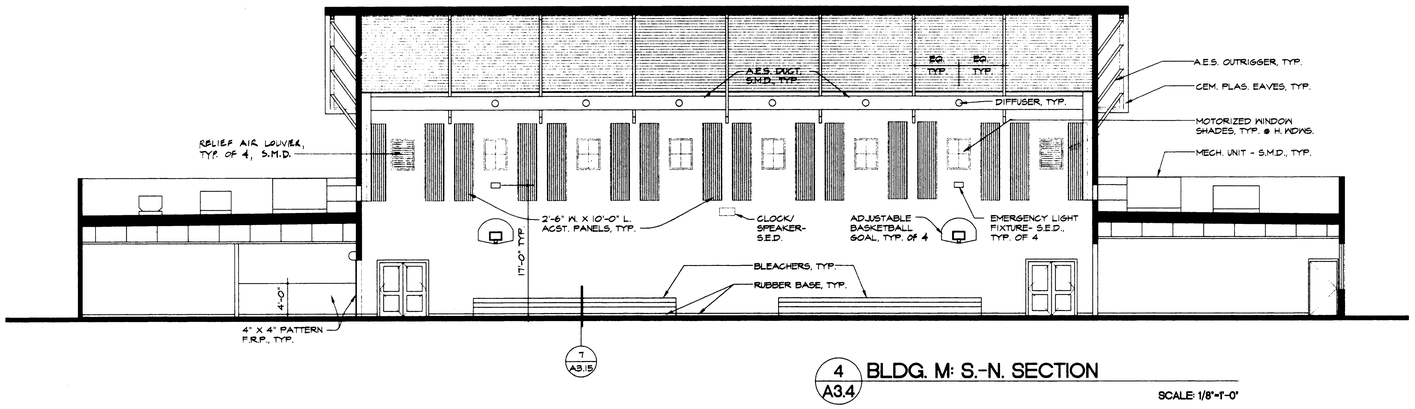

4 A3.4 BLDG. M: S.-N. SECTION

SCALE: 1/8"=1'-0"

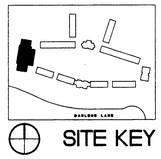

SITE KEY

HKA

Harlan Krusemark - Architect
4415 Cowell Road, Suite 230
Concord, CA 94521
Tel: 925.681.1905
Fax: 925.681.1906

LICENSED ARCHITECT HARLAN KRUSEMARK No. C23833 Exp. 9/30/01 STATE OF CALIFORNIA

Revisions	Date
△	
△	
△	
△	
△	
△	

HAWKINS SCHOOL
(INCREMENT #1)

475 Darlene Lane
Tracy, CA 95377

Jefferson School District
7500 West Linne Road
Tracy, CA 95304

DSA FILE NO. 39-39
IDENTIFICATION STAMP
DIVISION OF THE STATE ARCHITECT
APPL 02 -102225
ACT FLS SS
DATE AUG 4 2000

Sheet Title:
BUILDING M: MULTI-PURPOSE SECTIONS

Printing Date / Purpose:
8/18/00 - DSA APPROVAL

Scale: 1/8" = 1'-0"
Project Number: 9903.00
Sheet Number:

A3.4

of Sheets

FILE: 9910/A3.4

COPYRIGHT © 2000 HARLAN KRUSEMARK - ARCHITECT (HKA) THESE DRAWINGS ARE PROPRIETARY DOCUMENTS OF HKA AND ARE NOT TO BE DISTRIBUTED, PUBLISHED OR REPRODUCED WITHOUT WRITTEN PERMISSION OF HKA.

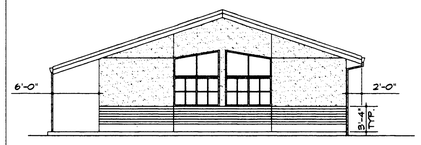

12 A3.5 BLDG. D: EAST ELEVATION
SCALE: 1/8"= 1'-0"

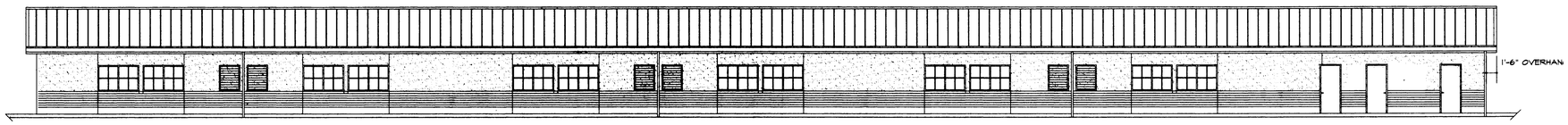

11 A3.5 BLDG. D: NORTH ELEVATION
SCALE: 1/8"= 1'-0"

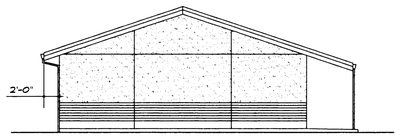

10 A3.5 BLDG. D: WEST ELEVATION
SCALE: 1/8"= 1'-0"

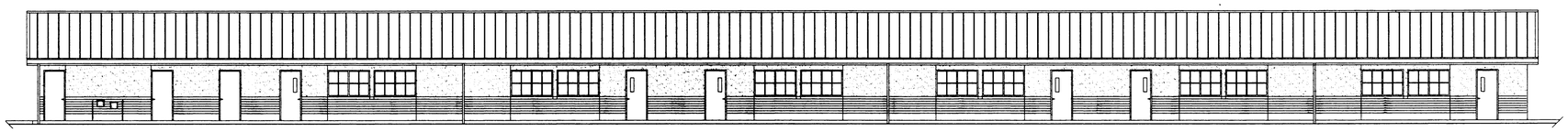

9 A3.5 BLDG. D: SOUTH ELEVATION
SCALE: 1/8"= 1'-0"

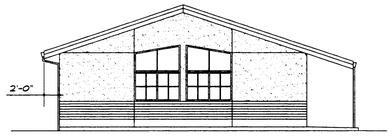

8 A3.5 BLDG. C: EAST ELEVATION
SCALE: 1/8"= 1'-0"

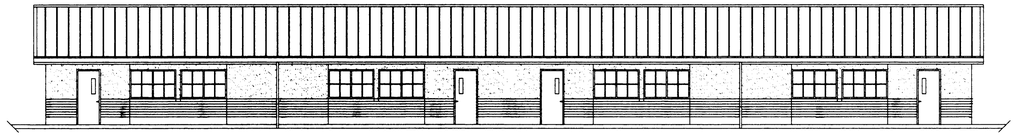

7 A3.5 BLDG. C: NORTH ELEVATION
SCALE: 1/8"= 1'-0"

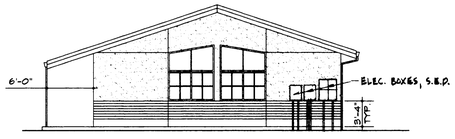

6 A3.5 BLDG. C: WEST ELEVATION
SCALE: 1/8"= 1'-0"

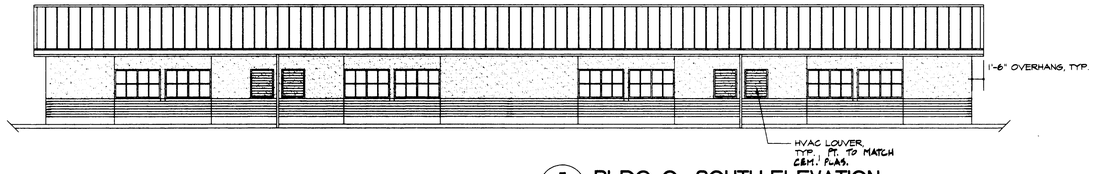

5 A3.5 BLDG. C: SOUTH ELEVATION
SCALE: 1/8"= 1'-0"

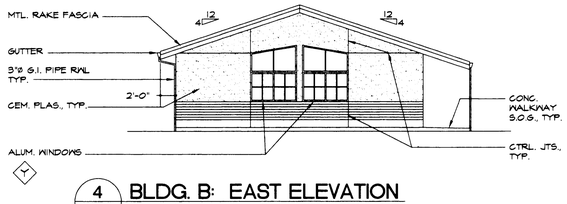

4 A3.5 BLDG. B: EAST ELEVATION
SCALE: 1/8"= 1'-0"

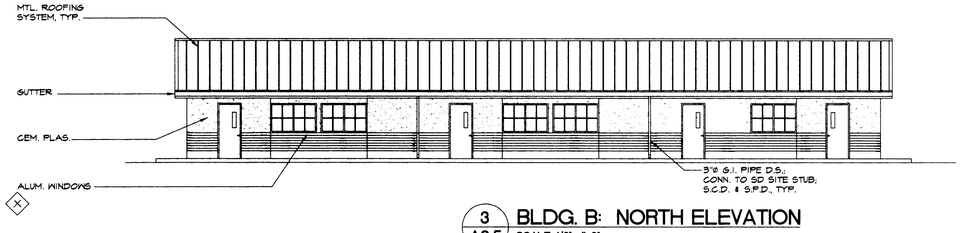

3 A3.5 BLDG. B: NORTH ELEVATION
SCALE: 1/8"= 1'-0"

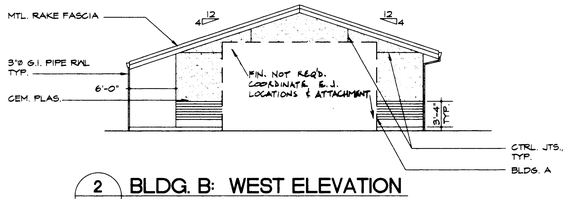

2 A3.5 BLDG. B: WEST ELEVATION
SCALE: 1/8"= 1'-0"

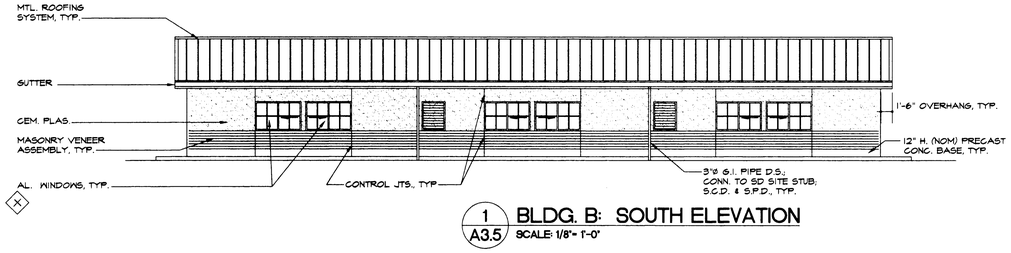

1 A3.5 BLDG. B: SOUTH ELEVATION
SCALE: 1/8"= 1'-0"

SITE KEY

HKA
Harlan Krusemark - Architect
4415 Cowell Road, Suite 230
Concord, CA 94521
Tel: 925.681.1905
Fax: 925.681.1906

LICENSED ARCHITECT HARLAN KRUSEMARK No. C23833 Exp. 9/30/01 STATE OF CALIFORNIA

Revisions	Date

HAWKINS SCHOOL
(INCREMENT #2)

475 Darlene Lane
Tracy, CA 95377

Jefferson School District
7500 West Linne Road
Tracy, CA 95304

DSA FILE NO. 39-39
IDENTIFICATION STAMP
DIVISION OF THE STATE ARCHITECT
APPL 02 -102225
ACK FLS SS
DATE AUG 2 4 2000

Sheet Title:
BUILDING B: GRADE 3
BUILDING C: GRADE 1
BUILDING D: GRADE 2
EXTERIOR ELEVATIONS

Printing Date / Purpose:
8/18/00 - DSA APPROVAL

Scale: 1/8" = 1'-0"
Project Number: 9903.00
Sheet Number:

A3.5

of Sheets

FILE: 9910/A3.5

COPYRIGHT © 2000 HARLAN KRUSEMARK - ARCHITECT (HKA) THESE DRAWINGS ARE PROPRIETARY DOCUMENTS OF HKA AND ARE NOT TO BE DISTRIBUTED, PUBLISHED OR REPRODUCED WITHOUT WRITTEN PERMISSION OF HKA.

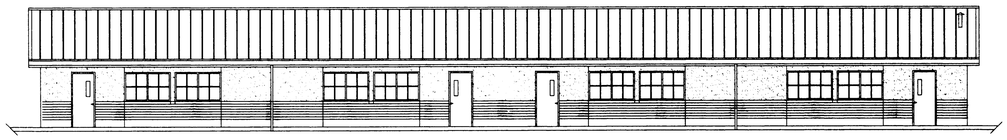

8 A3.6 BLDG. F: EAST ELEVATION
SCALE: 1/8" = 1'-0" (ADDITIVE ALTERNATE #1)

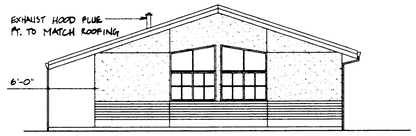

7 A3.6 BLDG. F: NORTH ELEVATION
SCALE: 1/8" = 1'-0" (ADDITIVE ALTERNATE #1)

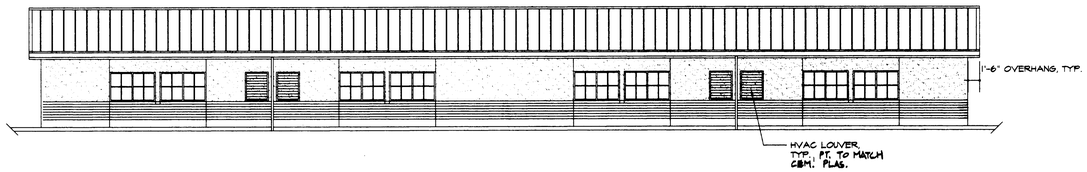

6 A3.6 BLDG. F: WEST ELEVATION
SCALE: 1/8" = 1'-0"

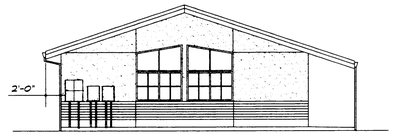

5 A3.6 BLDG. F: SOUTH ELEVATION
SCALE: 1/8" = 1'-0"

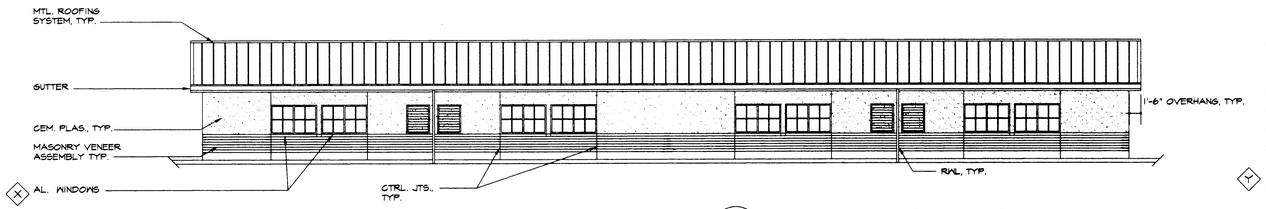

4 A3.6 BLDG. E: EAST ELEVATION
SCALE: 1/8" = 1'-0" (ADDITIVE ALTERNATE #2)

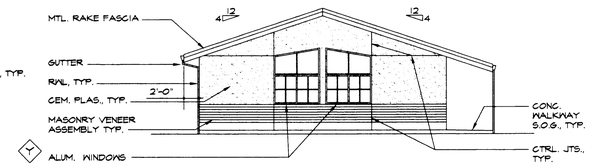

3 A3.6 BLDG. E: NORTH ELEVATION
SCALE: 1/8" = 1'-0" (ADDITIVE ALTERNATE #2)

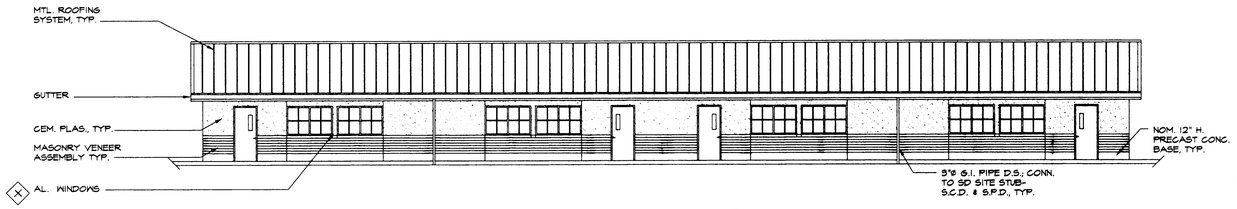

2 A3.6 BLDG. E: WEST ELEVATION
SCALE: 1/8" = 1'-0" (ADDITIVE ALTERNATE #2)

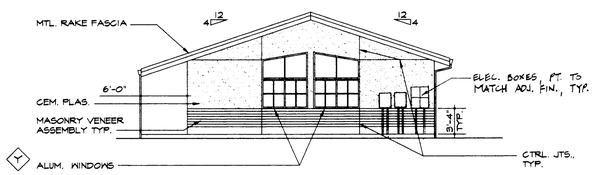

1 A3.6 BLDG. E: SOUTH ELEVATION
SCALE: 1/8" = 1'-0" (ADDITIVE ALTERNATE #2)

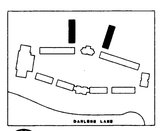

SITE KEY

HKA
Harlan Krusemark - Architect
4415 Cowell Road, Suite 230
Concord, CA 94521
Tel: 925.681.1905
Fax: 925.681.1906

LICENSED ARCHITECT
HARLAN KRUSEMARK
No. C23833
Exp. 9/30/01
STATE OF CALIFORNIA

Revisions	Date

HAWKINS SCHOOL
(INCREMENT #2)

475 Darlene Lane
Tracy, CA 95377

Jefferson School District
7500 West Linne Road
Tracy, CA 95304

DSA FILE NO. 39-39
IDENTIFICATION STAMP
DIVISION OF THE STATE ARCHITECT
APPL 02 -102225
AOR FLS NK SS
DATE AUG 2 4 2000

Sheet Title:
BUILDING E: GRADE 7
BUILDING F: GRADE 8
ELEVATIONS

Printing Date / Purpose:
8/18/00 - DSA APPROVAL

Scale: 1/8" = 1'-0"
Project Number: 9903.00
Sheet Number:

A3.6

of Sheets

FILE: 9910A3.6

COPYRIGHT © 2000 HARLAN KRUSEMARK - ARCHITECT (HKA) THESE DRAWINGS ARE PROPRIETARY DOCUMENTS OF HKA AND ARE NOT TO BE DISTRIBUTED, PUBLISHED OR REPRODUCED WITHOUT WRITTEN PERMISSION OF HKA.

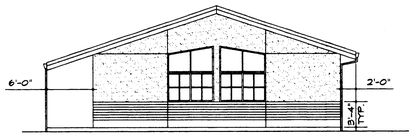

12 A3.7 BLDG. G: EAST ELEVATION
SCALE: 1/8"= 1'-0"

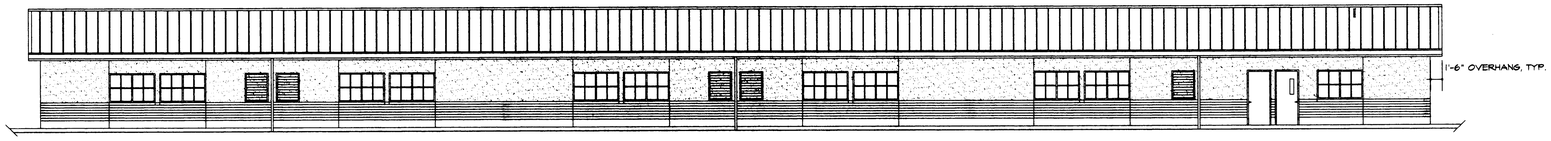

11 A3.7 BLDG. G: NORTH ELEVATION
SCALE: 1/8"= 1'-0"

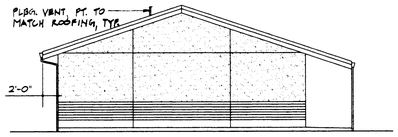

10 A3.7 BLDG. G: WEST ELEVATION
SCALE: 1/8"= 1'-0"

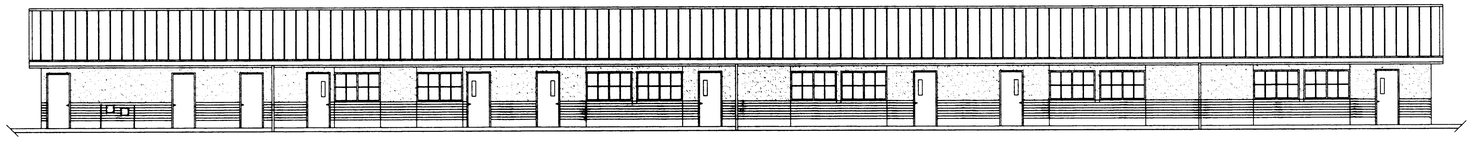

9 A3.7 BLDG. G: SOUTH ELEVATION
SCALE: 1/8"= 1'-0"

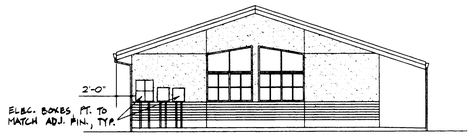

8 A3.7 BLDG. H: EAST ELEVATION
SCALE: 1/8"= 1'-0"

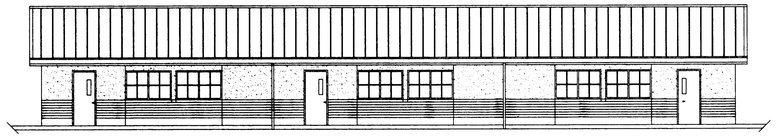

7 A3.7 BLDG. H: NORTH ELEVATION
SCALE: 1/8"= 1'-0"

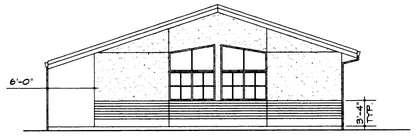

6 A3.7 BLDG. H: WEST ELEVATION
SCALE: 1/8"= 1'-0"

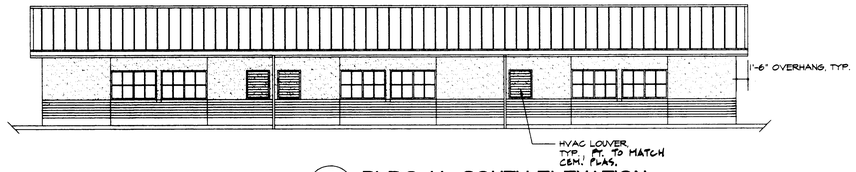

5 A3.7 BLDG. H: SOUTH ELEVATION
SCALE: 1/8"= 1'-0"

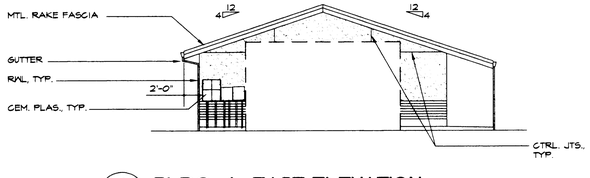

4 A3.7 BLDG. J: EAST ELEVATION
SCALE: 1/8"= 1'-0"

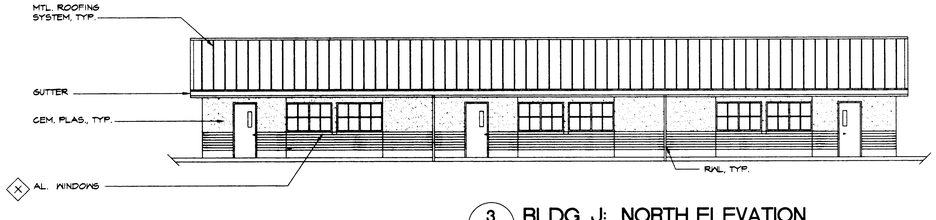

3 A3.7 BLDG. J: NORTH ELEVATION
SCALE: 1/8"= 1'-0"

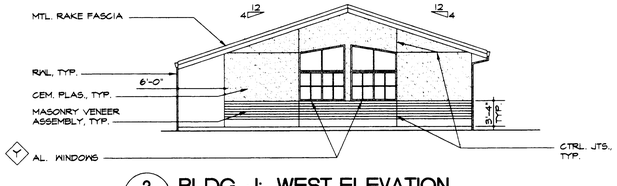

2 A3.7 BLDG. J: WEST ELEVATION
SCALE: 1/8"= 1'-0"

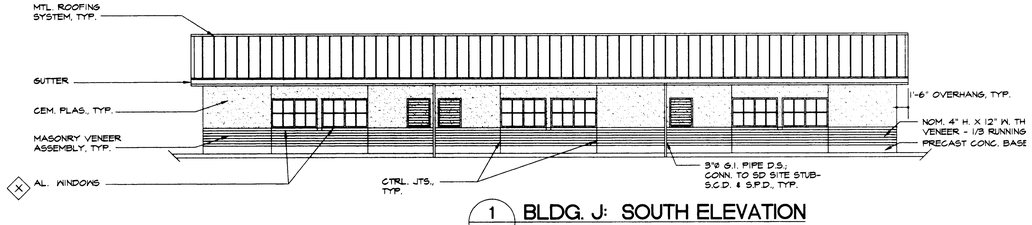

1 A3.7 BLDG. J: SOUTH ELEVATION
SCALE: 1/8"= 1'-0"

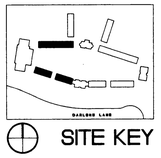

SITE KEY

HKA
Harlan Krusemark - Architect
4415 Cowell Road, Suite 230
Concord, CA 94521
Tel: 925.681.1905
Fax: 925.681.1906

LICENSED ARCHITECT HARLAN KRUSEMARK No. C23833 Exp. 5/30/10 STATE OF CALIFORNIA

Revisions	Date
△	
△	
△	
△	
△	
△	

HAWKINS SCHOOL
(INCREMENT #2)

475 Darlene Lane
Tracy, CA 95377

Jefferson School District
7500 West Linne Road
Tracy, CA 95304

DSA FILE NO. 39-39
IDENTIFICATION STAMP
DIVISION OF THE STATE ARCHITECT
APP. 02 -102225
ACC. FLS. F/C SS.
DATE AUG 2 4 2009

Sheet Title:
BUILDING G: GRADE 6
BUILDING H: GRADE 5
BUILDING J: GRADE 4
ELEVATIONS

Printing Date / Purpose:
8/18/2009 DSA APPROVAL

Scale: 1/8" = 1'-0"
Project Number: 9903.00
Sheet Number:

A3.7

of Sheets

FILE: 9910/A3.7

COPYRIGHT © 2000 HARLAN KRUSEMARK - ARCHITECT (HKA) THESE DRAWINGS ARE PROPRIETARY DOCUMENTS OF HKA AND ARE NOT TO BE DISTRIBUTED, PUBLISHED OR REPRODUCED WITHOUT WRITTEN PERMISSION OF HKA.

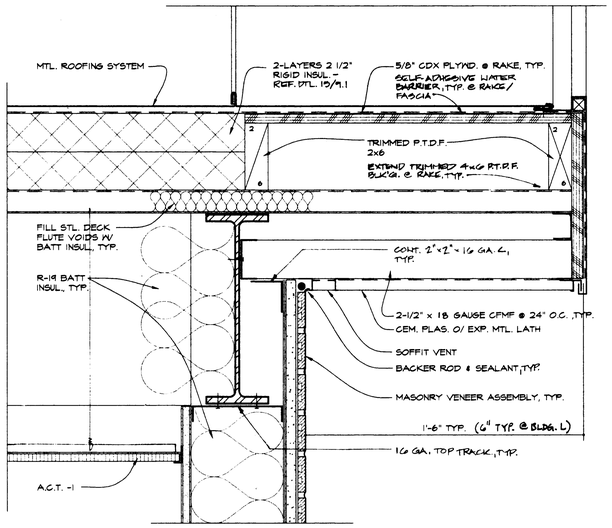

A3.8 TYP. RAKE
SCALE: 3" = 1'-0"

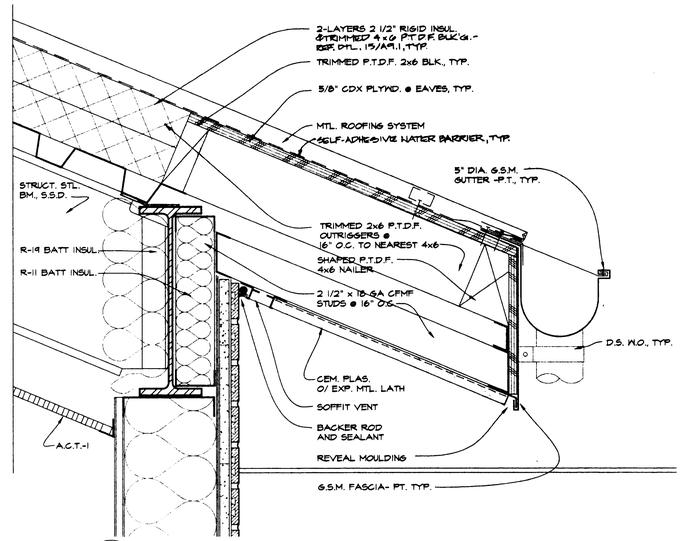

A3.8 DETAIL @ EAVES
SCALE: 3" = 1'-0"

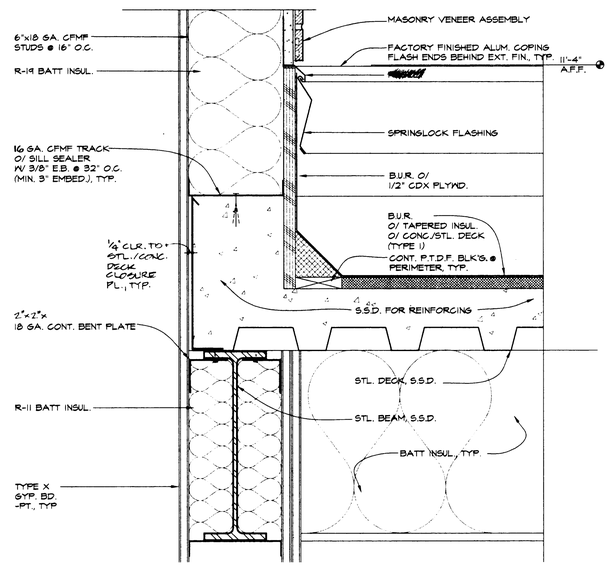

A3.8 DETAIL @ B.U.R.
SCALE: 3" = 1'-0"

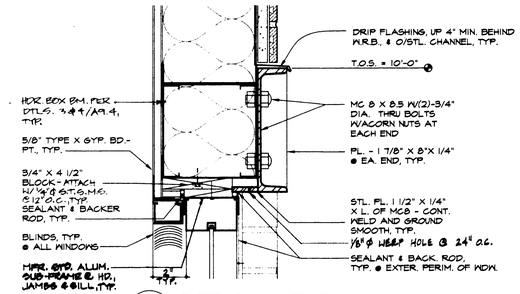

4 A3.8 DETAIL @ HEAD
SCALE: 3" = 1'-0"

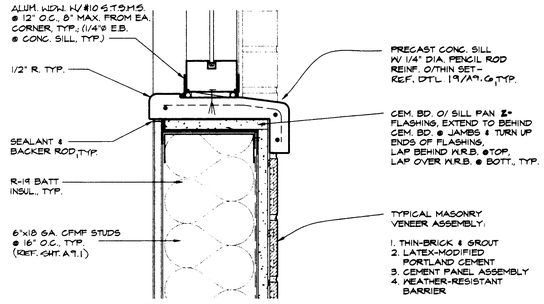

3 A3.8 DETAIL @ SILL
SCALE: 3" = 1'-0"

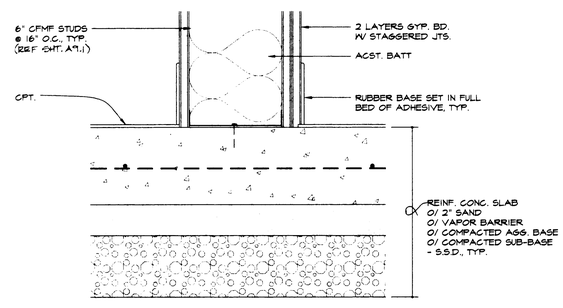

6 A3.8 BASE @ INTER. PARTITION
SCALE: 3" = 1'-0"

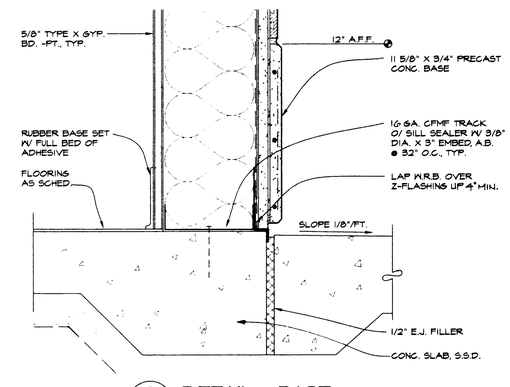

2 A3.8 DETAIL @ BASE
SCALE: 3" = 1'-0"

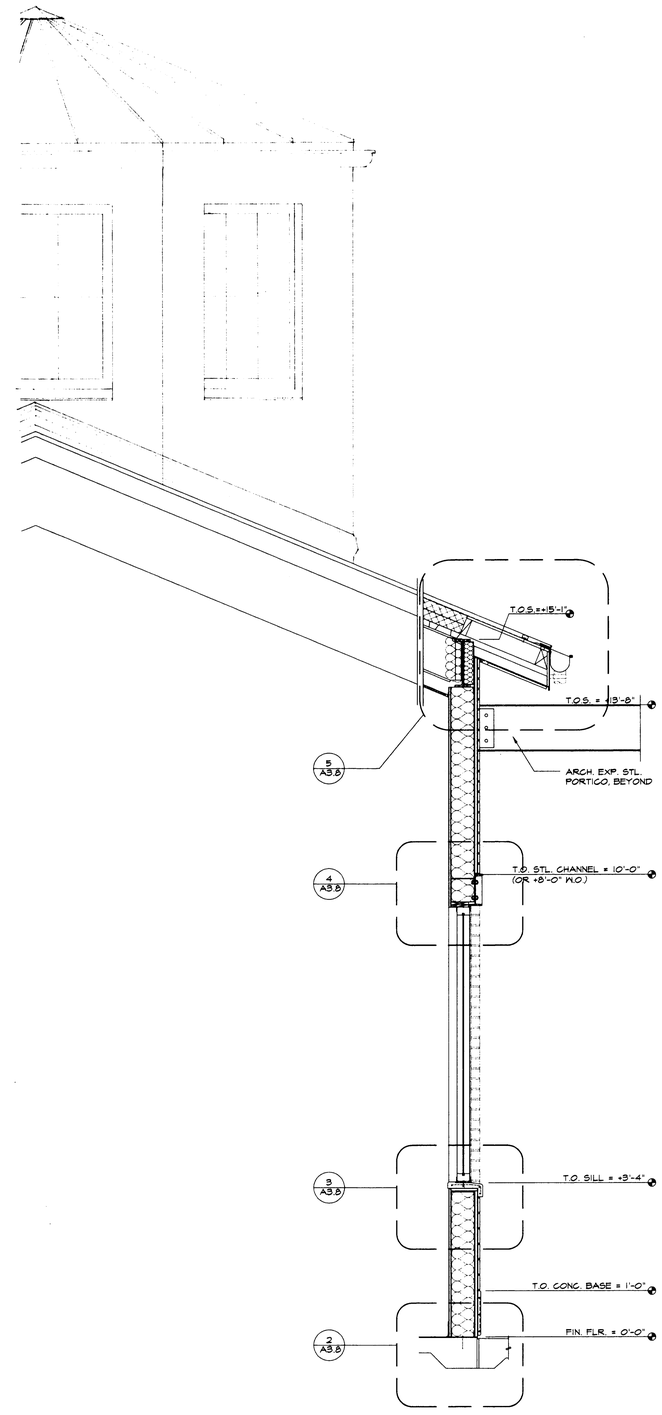

1 A3.8 WALL SECTION
SCALE: 3/4" = 1'-0"

HKA
Harlan Krusemark - Architect
4415 Cowell Road, Suite 230
Concord, CA 94521
Tel: 925.681.1905
Fax: 925.681.1906

LICENSED ARCHITECT HARLAN KRUSEMARK No. C23833 Exp. 9/30/01 STATE OF CALIFORNIA

Revisions	Date

HAWKINS SCHOOL
(INCREMENT #1)

475 Darlene Lane
Tracy, CA 95377

Jefferson School District
7500 West Linne Road
Tracy, CA 95304

DSA FILE NO. 39-39
IDENTIFICATION STAMP
DIVISION OF THE STATE ARCHITECT
APPL 02 -102225
ACT FLS NK SS
DATE AUG 2 4 2000

Sheet Title:
BUILDING A: ADMINISTRATION
WALL SECTION & DETAILS

Printing Date / Purpose:
8/18/00 - DSA APPROVAL

Scale: As Noted
Project Number: 9903.00
Sheet Number:

A3.8

of Sheets

FILE: 9910/A3.8

COPYRIGHT © 2000 HARLAN KRUSEMARK - ARCHITECT (HKA) THESE DRAWINGS ARE PROPRIETARY DOCUMENTS OF HKA AND ARE NOT TO BE DISTRIBUTED, PUBLISHED OR REPRODUCED WITHOUT WRITTEN PERMISSION OF HKA.

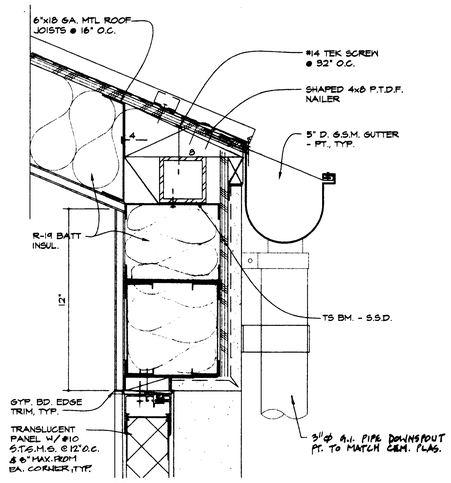

7 A3.9 CUPOLA • WINDOW HEAD
SCALE: 3" = 1'-0"

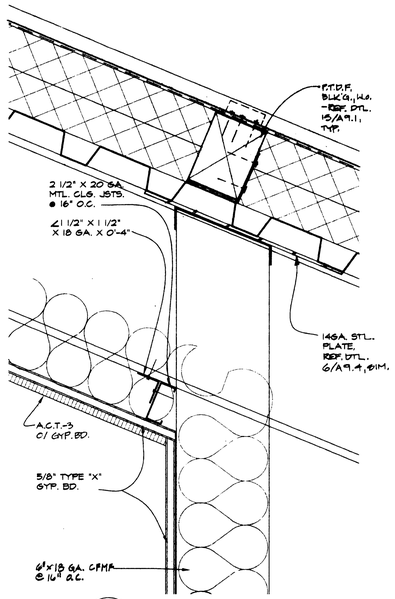

4 A3.9 TOP OF PLATE
SCALE: 3" = 1'-0"

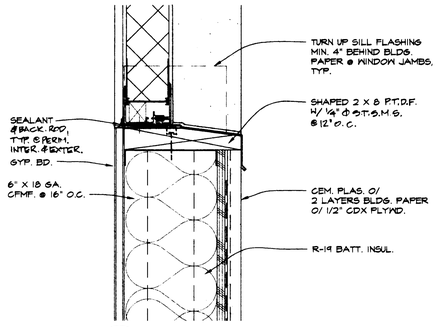

6 A3.9 CUPOLA • WINDOW SILL
SCALE: 3" = 1'-0"

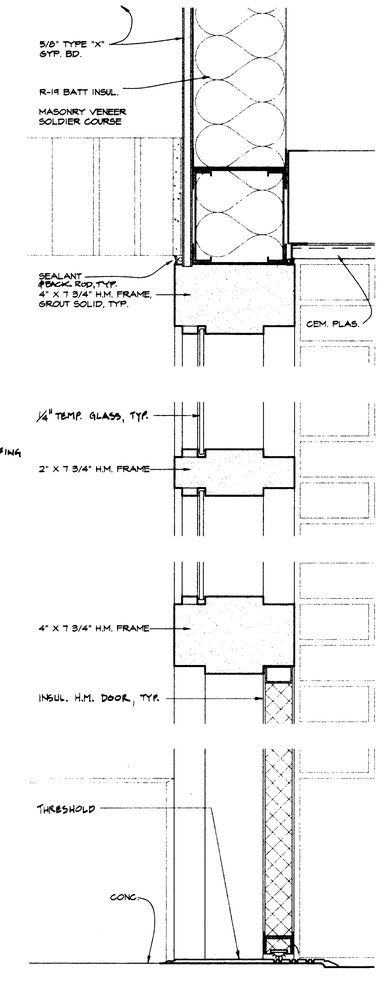

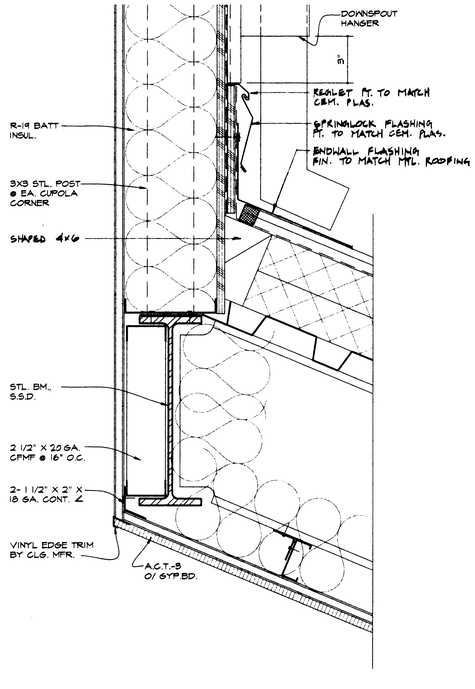

5 A3.9 CUPOLA
SCALE: 3" = 1'-0"

3 A3.9 ENTRY DOOR
SCALE: 3" = 1'-0"

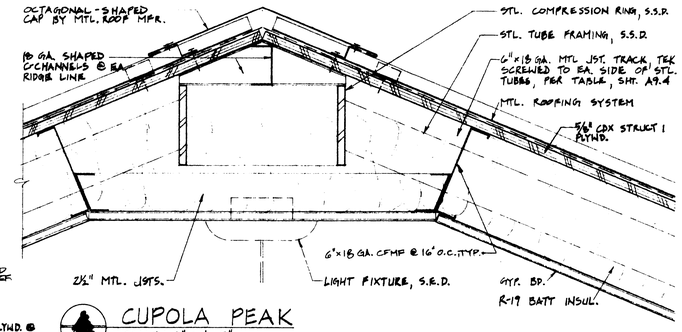

A3.9 CUPOLA PEAK
SCALE: 3" = 1'-0"

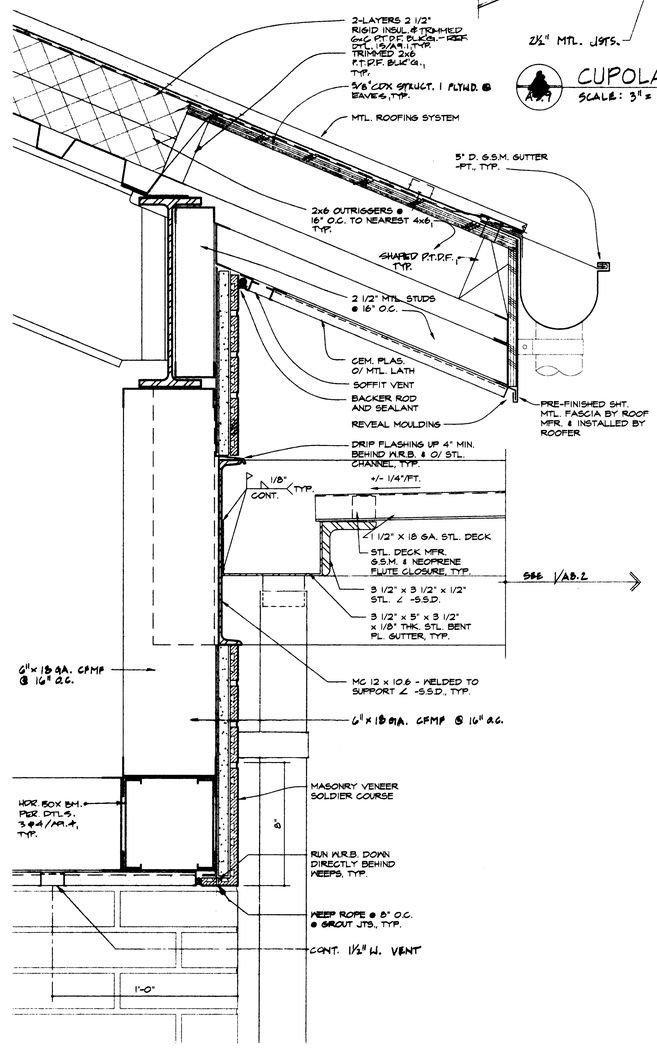

2 A3.9 EAVE AND GUTTER • ENTRY OPENING
SCALE: 3" = 1'-0"

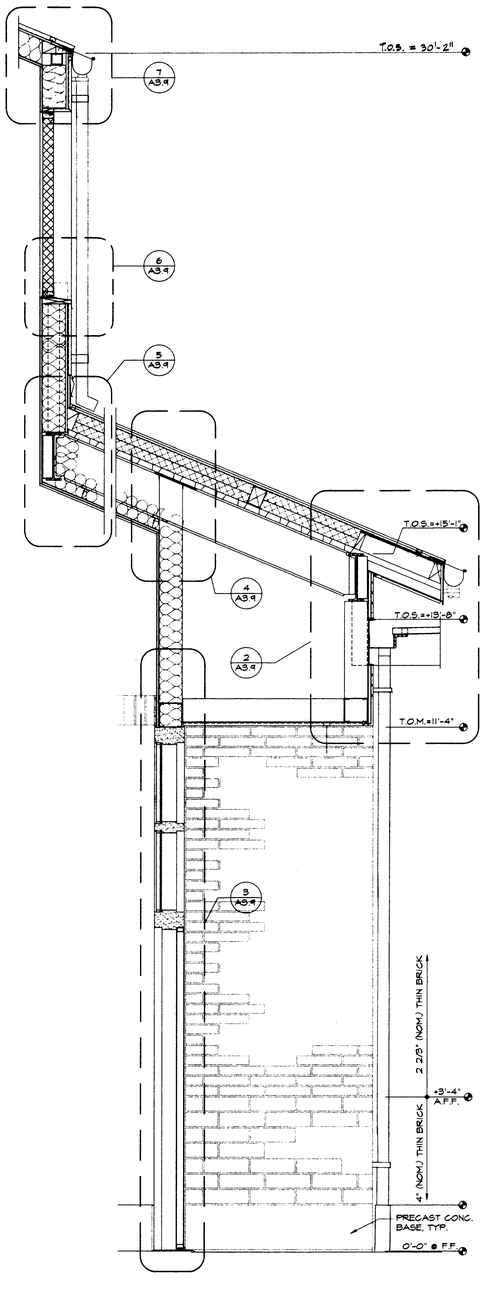

1 A3.9 WALL SECTION
SCALE: 3/4" = 1'-0"

HKA
Harlan Krusemark - Architect
4415 Cowell Road, Suite 230
Concord, CA 94521
Tel: 925.681.1905
Fax: 925.681.1906

LICENSED ARCHITECT HARLAN KRUSEMARK No. C23633 Exp. 9/30/01 STATE OF CALIFORNIA

Revisions	Date

HAWKINS SCHOOL (INCREMENT #1)

475 Darlene Lane
Tracy, CA 95377

Jefferson School District
7500 West Linne Road
Tracy, CA 95304

DSA FILE NO. 39-39
IDENTIFICATION STAMP
DIVISION OF THE STATE ARCHITECT
APPL 02 -102225
AC FLS SS
DATE AUG - 4 2000

Sheet Title:
BUILDING A: ADMINISTRATION
WALL SECTION & DETAILS AT
ENTRY AND CUPOLA

Printing Date / Purpose:
8/18/00 - DSA APPROVAL

Scale: As Noted
Project Number: 9903.00
Sheet Number:

A3.9

of Sheets

FILE: 9910/A3.9

COPYRIGHT © 2000 HARLAN KRUSEMARK - ARCHITECT (HKA) THESE DRAWINGS ARE PROPRIETARY DOCUMENTS OF HKA AND ARE NOT TO BE DISTRIBUTED, PUBLISHED OR REPRODUCED WITHOUT WRITTEN PERMISSION OF HKA.

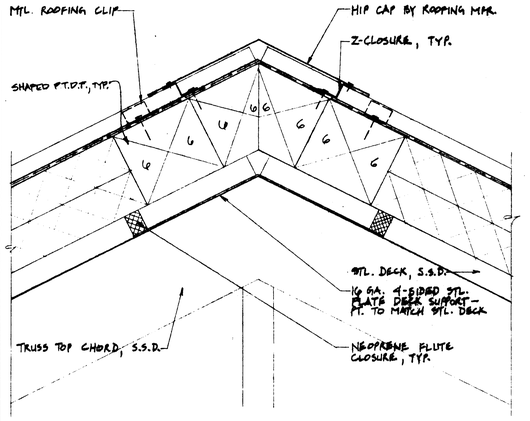

B / A3.10 ROOF HIP PEAK
SCALE: 3" = 1'-0"

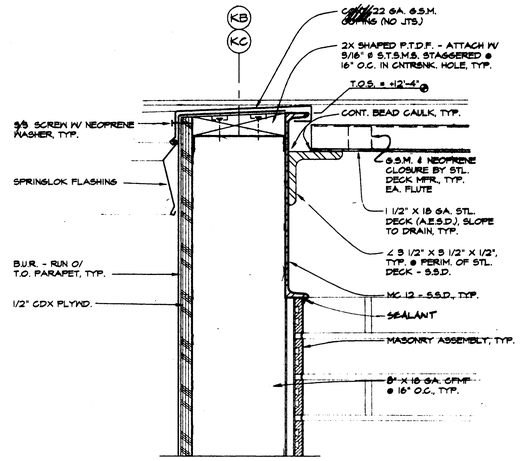

7 / A3.10 PARAPET @ BLDG. K
SCALE: 3" = 1'-0"

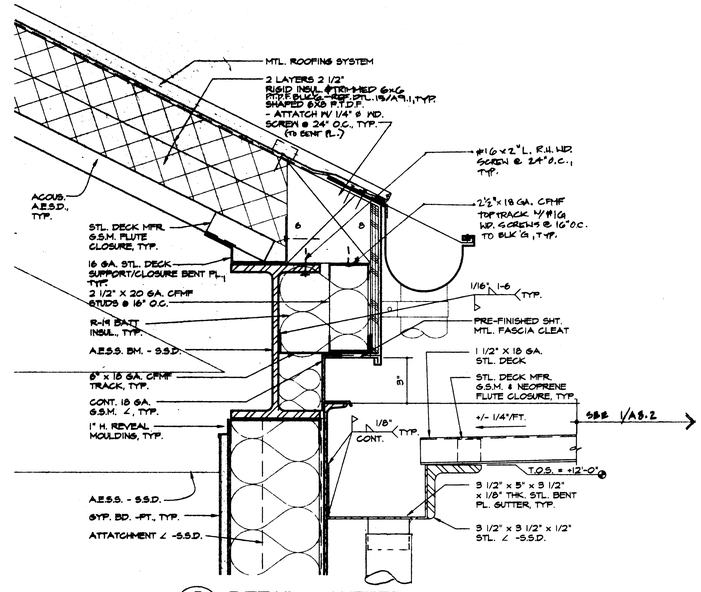

5 / A3.10 DETAIL @ GUTTER
SCALE: 3" = 1'-0"

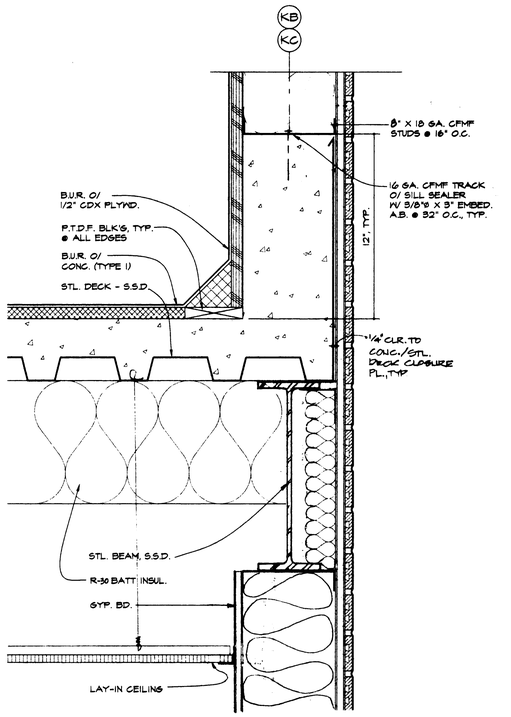

6 / A3.10 DETAIL @ B.U.R.
SCALE: 3" = 1'-0"

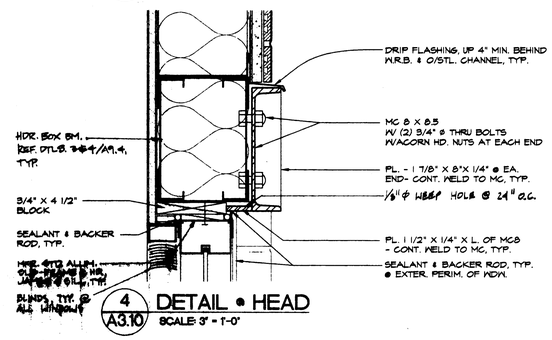

4 / A3.10 DETAIL @ HEAD
SCALE: 3" = 1'-0"

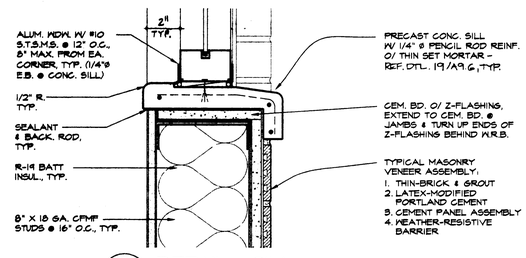

3 / A3.10 DETAIL @ SILL
SCALE: 3" = 1'-0"

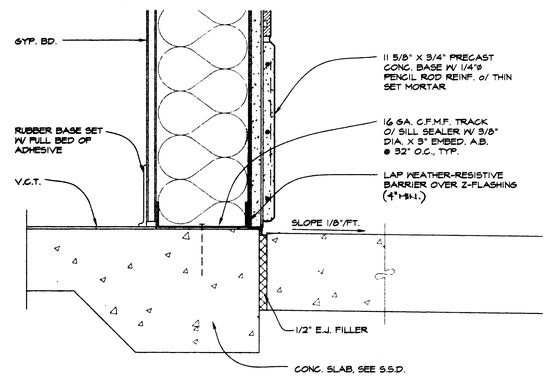

2 / A3.10 DETAIL @ BASE
SCALE: 3" = 1'-0"

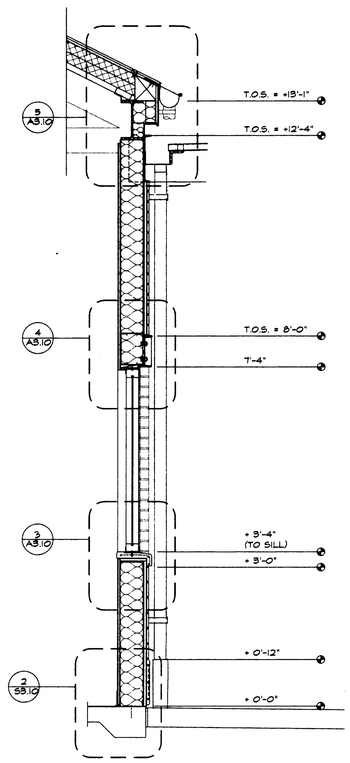

1 / A3.10 WALL SECTION
SCALE: 3/4" = 1'-0"

HKA
Harlan Krusemark - Architect
4415 Cowell Road, Suite 230
Concord, CA 94521
Tel: 925.681.1905
Fax: 925.681.1906

LICENSED ARCHITECT HARLAN KRUSEMARK No. C23633 Exp. 9/30/01 STATE OF CALIFORNIA

Revisions	Date

HAWKINS SCHOOL (INCREMENT #1)

475 Darlene Lane
Tracy, CA 95377

Jefferson School District
7500 West Linne Road
Tracy, CA 95304

DSA FILE NO. 39-39
IDENTIFICATION STAMP
DIVISION OF THE STATE ARCHITECT
APPL 02 -102225
ARCH FLS SS
DATE AUG 2 5 2000

Sheet Title:
BUILDING K: KINDERGARTEN
WALL SECTION & DETAILS

Printing Date / Purpose:
8/18/00 - DSA APPROVAL

Scale: As Noted
Project Number: 9903.00
Sheet Number:

A3.10

of Sheets

FILE: 9910/A3.10

COPYRIGHT © 2000 HARLAN KRUSEMARK - ARCHITECT (HKA) THESE DRAWINGS ARE PROPRIETARY DOCUMENTS OF HKA AND ARE NOT TO BE DISTRIBUTED, PUBLISHED OR REPRODUCED WITHOUT WRITTEN PERMISSION OF HKA.

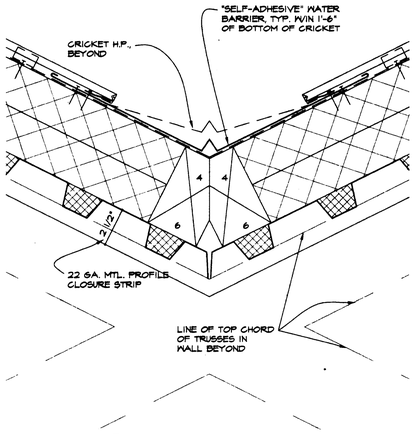

10/A3.12 CRICKET DETAIL
SCALE: 3" = 1'-0"

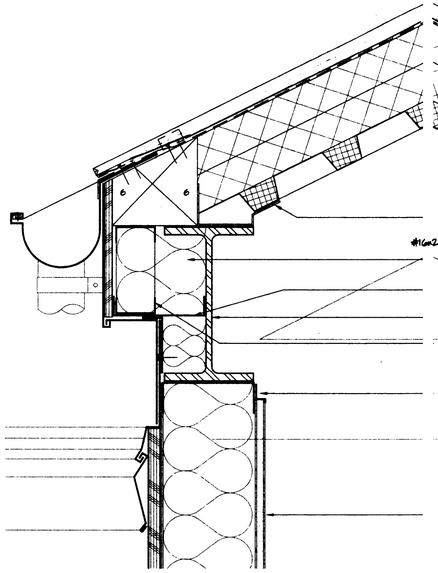

7/A3.12 GUTTER
SCALE: 3" = 1'-0"

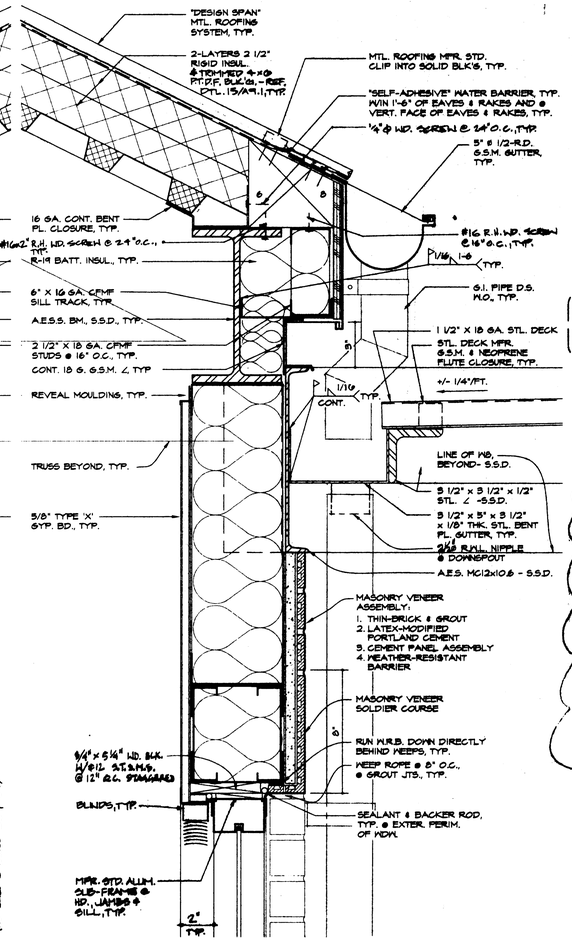

5/A3.12 GUTTER AND WINDOW HEAD @ ENTRY
SCALE: 3" = 1'-0"

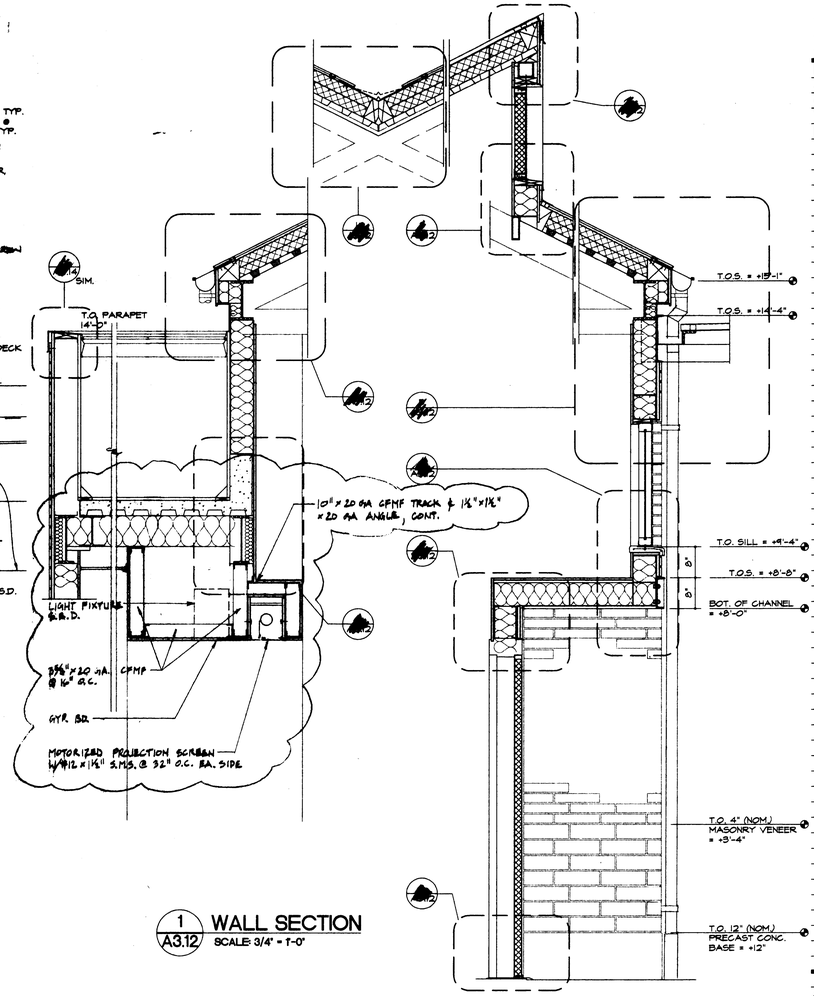

1/A3.12 WALL SECTION
SCALE: 3/4" = 1'-0"

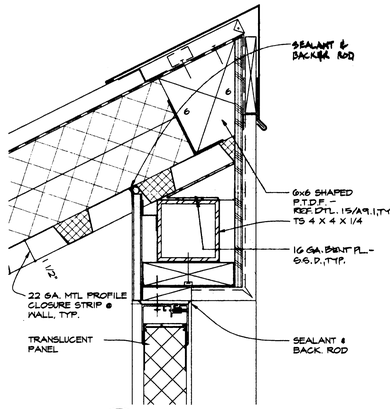

10/A3.12 HEAD @ CUPOLA
SCALE: 3" = 1'-0"

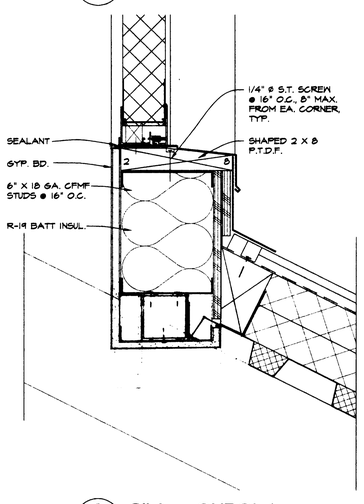

10/A3.12 SILL @ CUPOLA
SCALE: 3" = 1'-0"

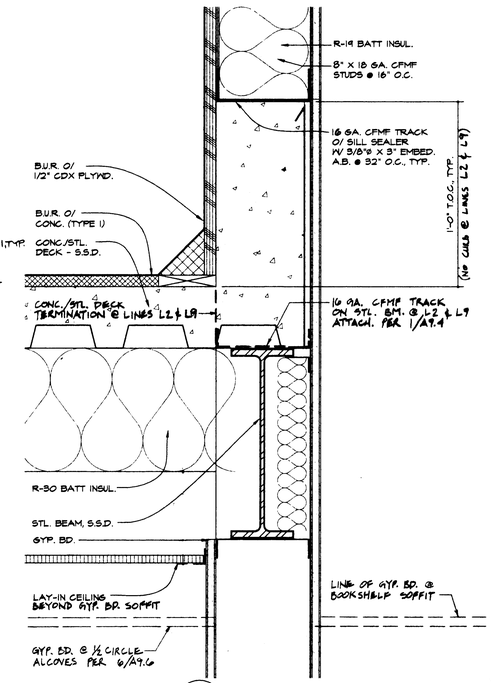

6/A3.12 DETAIL @ B.U.R.
SCALE: 3" = 1'-0"

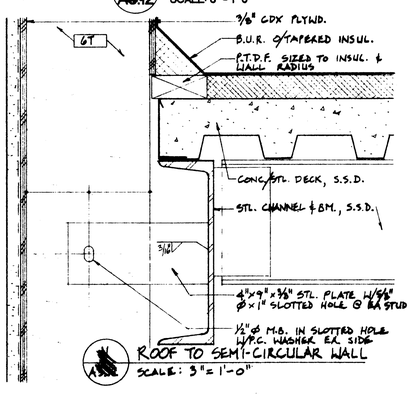

5/A3.12 ROOF TO SEMI-CIRCULAR WALL
SCALE: 3" = 1'-0"

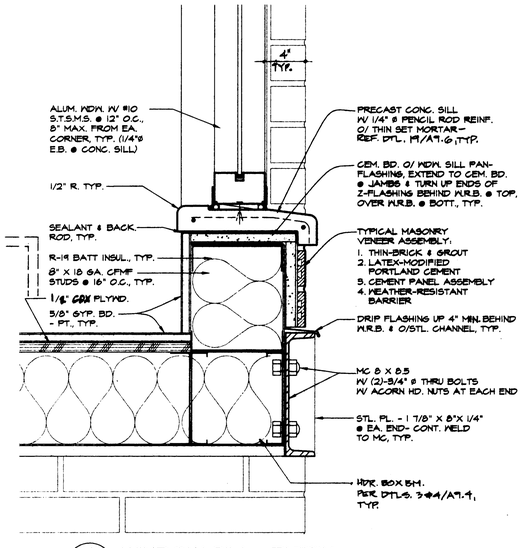

10/A3.12 WINDOW SILL @ ENTRY
SCALE: 3" = 1'-0"

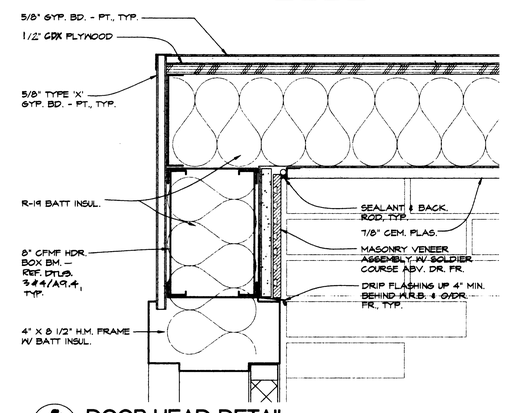

10/A3.12 DOOR HEAD DETAIL
SCALE: 3" = 1'-0"

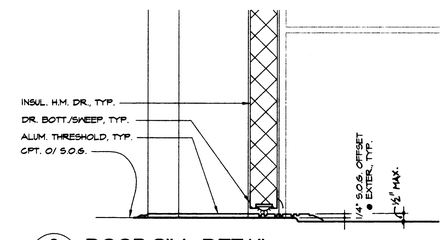

10/A3.12 DOOR SILL DETAIL
SCALE: 3" = 1'-0"

HKA
Harlan Krusemark - Architect
4415 Cowell Road, Suite 230
Concord, CA 94521
Tel: 925.681.1905
Fax: 925.681.1906

LICENSED ARCHITECT HARLAN KRUSEMARK No. C22833 Exp. 9/30/16 STATE OF CALIFORNIA

Revisions	Date

HAWKINS SCHOOL (INCREMENT #1)

475 Darlene Lane
Tracy, CA 95377

Jefferson School District
7500 West Linne Road
Tracy, CA 95304

DSA FILE NO. 39-39
IDENTIFICATION STAMP
DIVISION OF THE STATE ARCHITECT
APPL NO. -102225
AC ___ PLS ___ SS ___
DATE AUG 24 2000

Sheet Title:
BUILDING L: LIBRARY
WALL SECTIONS AND DETAILS

Printing Date / Purpose:
8/18/00 - DSA APPROVAL

Scale: As Noted
Project Number: 9903.00
Sheet Number:

A3.12

of Sheets

FILE: 9910/A3.12

COPYRIGHT © 2000 HARLAN KRUSEMARK - ARCHITECT (HKA) THESE DRAWINGS ARE PROPRIETARY DOCUMENTS OF HKA AND ARE NOT TO BE DISTRIBUTED, PUBLISHED OR REPRODUCED WITHOUT WRITTEN PERMISSION OF HKA.

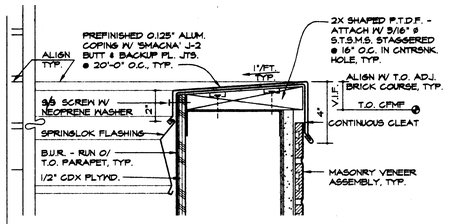

6 / A3.14 COPING • PARAPET

SCALE: 3" = 1'-0"

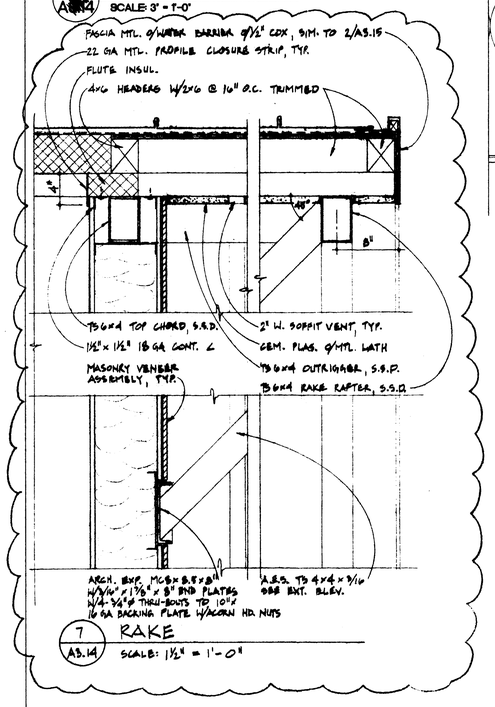

7 / A3.14 RAKE

SCALE: 1 1/2" = 1'-0"

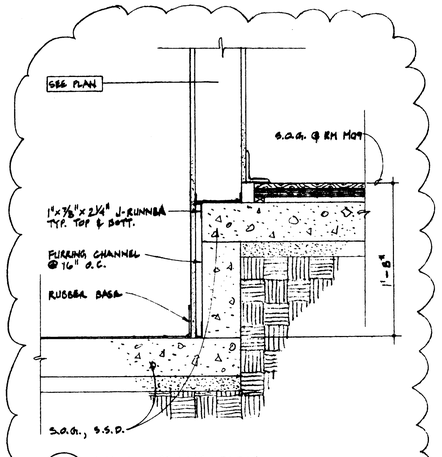

8 / A3.14 WALL TRANSITION

SCALE: 1 1/2" = 1'-0"

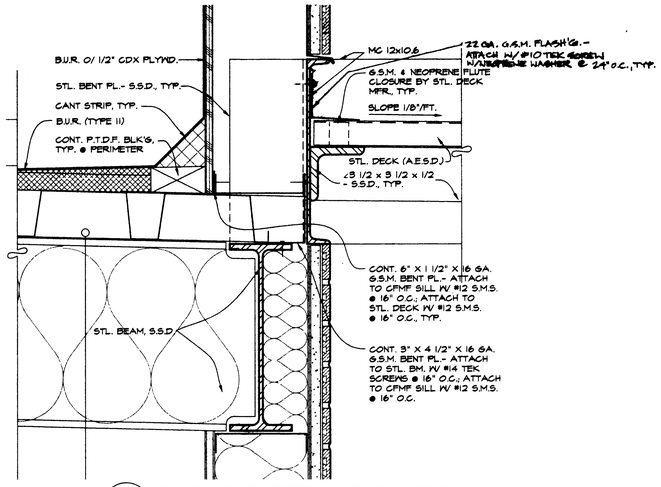

5 / A3.14 B.U.R., PARAPET, AND CANOPY

SCALE: 3" = 1'-0"

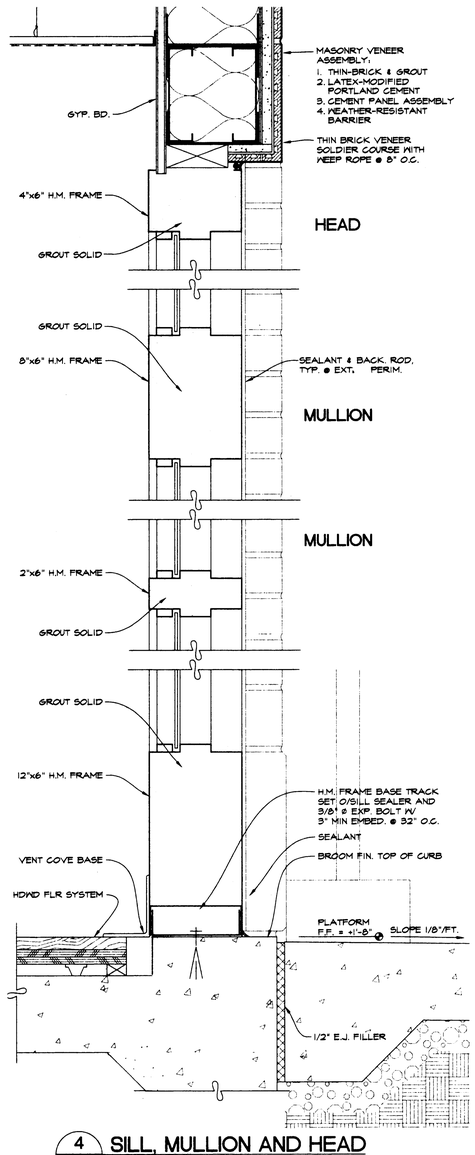

4 / A3.14 SILL, MULLION AND HEAD

SCALE: 3" = 1'-0"

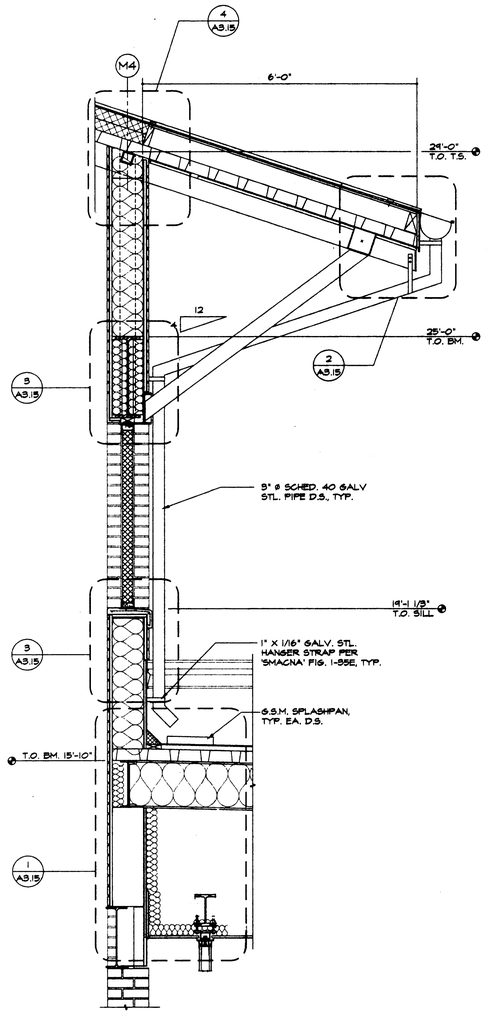

2 / A3.14 SECTION • PROSCENIUM AND OVERHANG

SCALE: 3/4" = 1'-0"

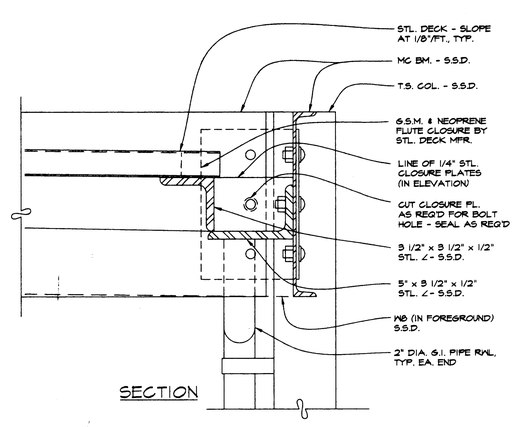

3 / A3.14 COLUMN PLAN AND SECTION

SCALE: 3" = 1'-0"

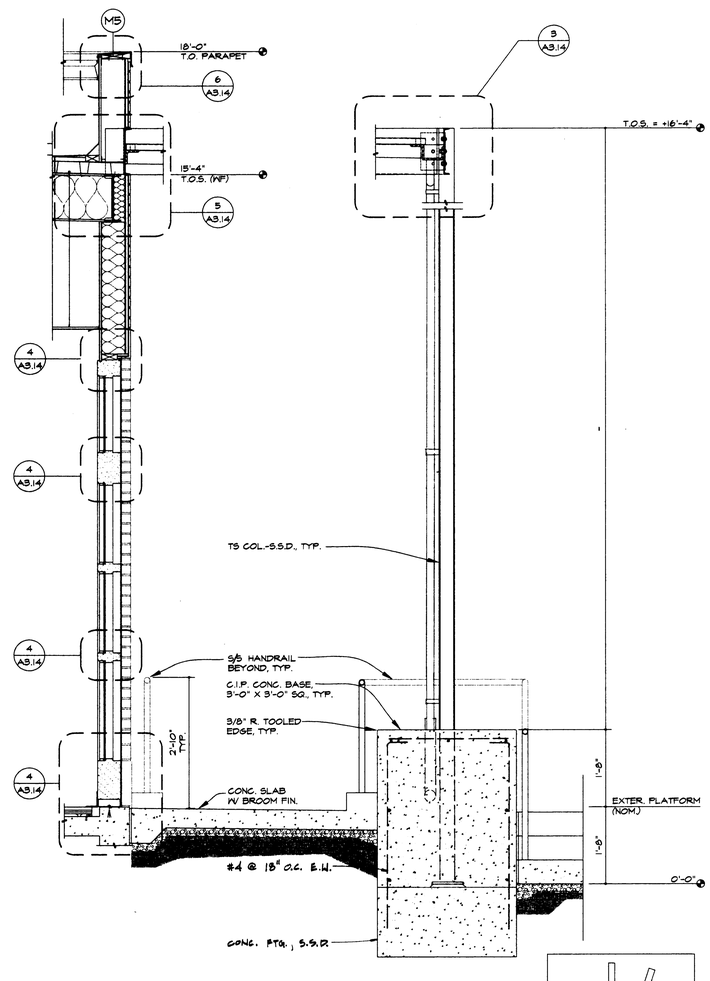

1 / A3.14 SECTION • INTERIOR AND EXTERIOR PLATFORM

SCALE: 3/4" = 1'-0"

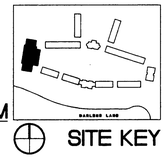

SITE KEY

HKA

Harlan Krusemark - Architect
4415 Cowell Road, Suite 230
Concord, CA 94521
Tel: 925.681.1905
Fax: 925.681.1906

LICENSED ARCHITECT HARLAN KRUSEMARK No. C23633 Exp. 9/30/01 STATE OF CALIFORNIA

Revisions	Date

HAWKINS SCHOOL (INCREMENT #1)

475 Darlene Lane
Tracy, CA 95377

Jefferson School District
7500 West Linne Road
Tracy, CA 95304

DSA FILE NO. 39-39

IDENTIFICATION STAMP
DIVISION OF THE STATE ARCHITECT
APPL 02 -102225
AC FLS SS
DATE AUG 2 4 2000

Sheet Title:
BUILDING M: MULTI-PURPOSE WALL SECTION AND DETAILS AT INDOOR AND OUTDOOR PLATFORM

Printing Date / Purpose:
8/18/00 - DSA APPROVAL

Scale: As Noted
Project Number: 9903.00
Sheet Number:

A3.14

of Sheets

FILE: 9910/A3.14

COPYRIGHT © 2000 HARLAN KRUSEMARK - ARCHITECT (HKA) THESE DRAWINGS ARE PROPRIETARY DOCUMENTS OF HKA AND ARE NOT TO BE DISTRIBUTED, PUBLISHED OR REPRODUCED WITHOUT WRITTEN PERMISSION OF HKA.

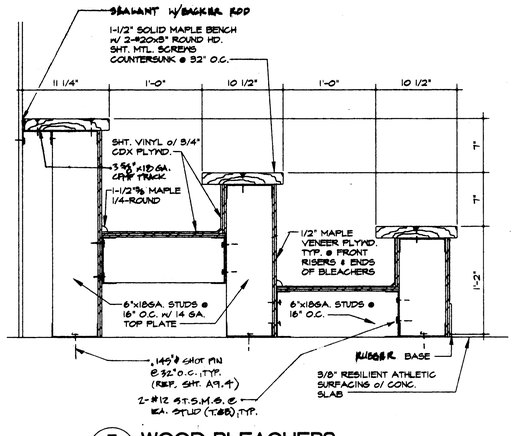

7 A3.15 WOOD BLEACHERS

1 1/2" = 1'-0"

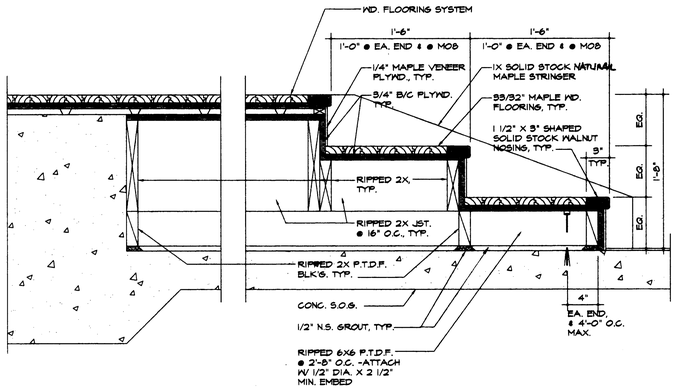

6 A3.15 WOOD STAIRS • PLATFORM

3" = 1'-0"

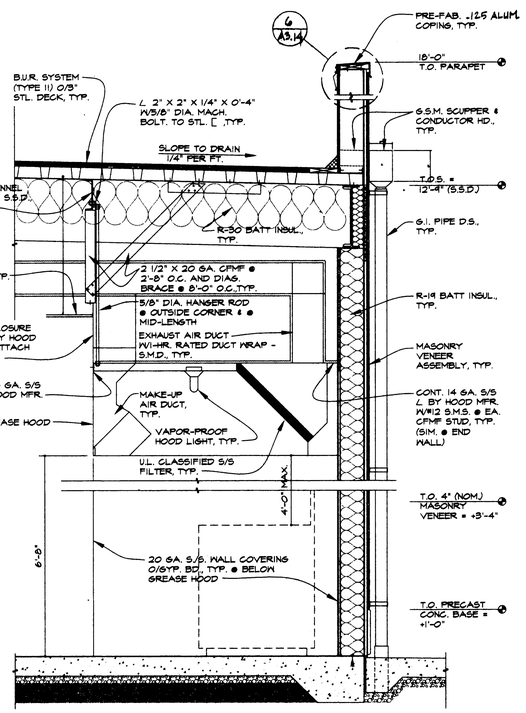

5 A3.15 SECTION • EXHAUST HOOD

3/4" = 1'-0"

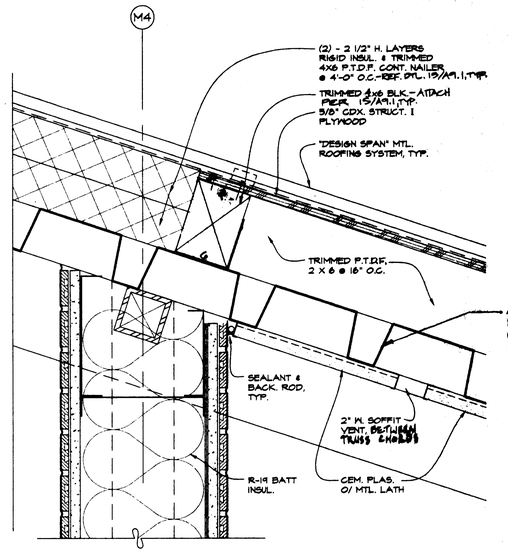

4 A3.15 DETAIL • SOFFIT

3" = 1'-0"

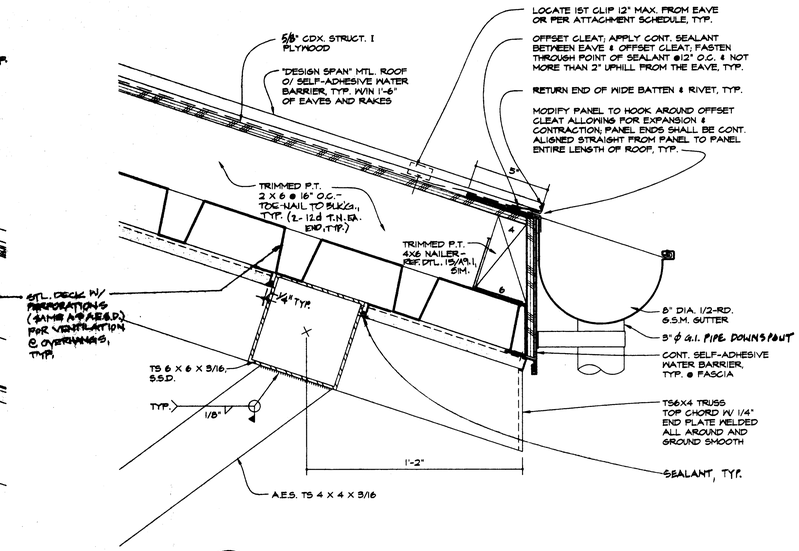

2 A3.15 DETAIL • EAVE AND GUTTER

3" = 1'-0"

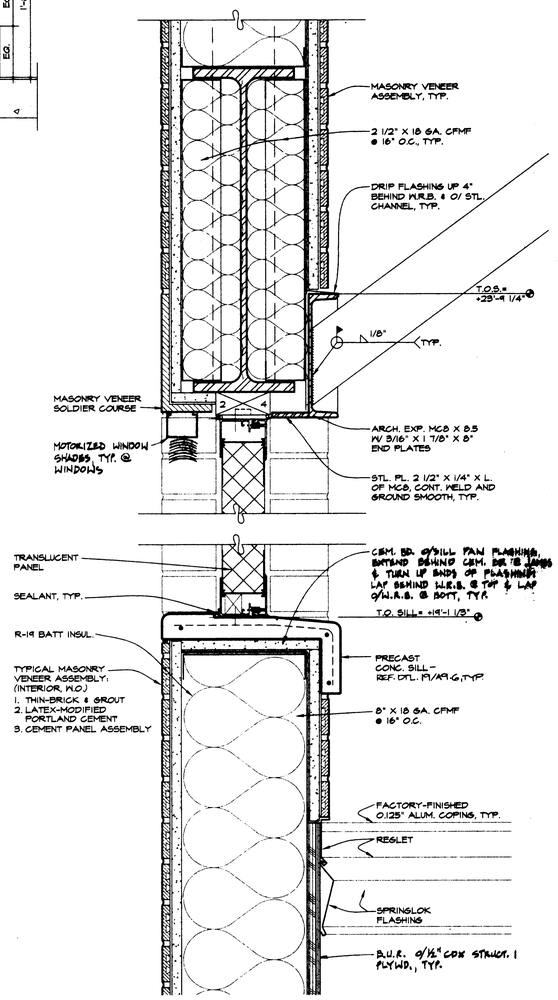

3 A3.15 DETAIL • PROSCENIUM AND B.U.R.

3" = 1'-0"

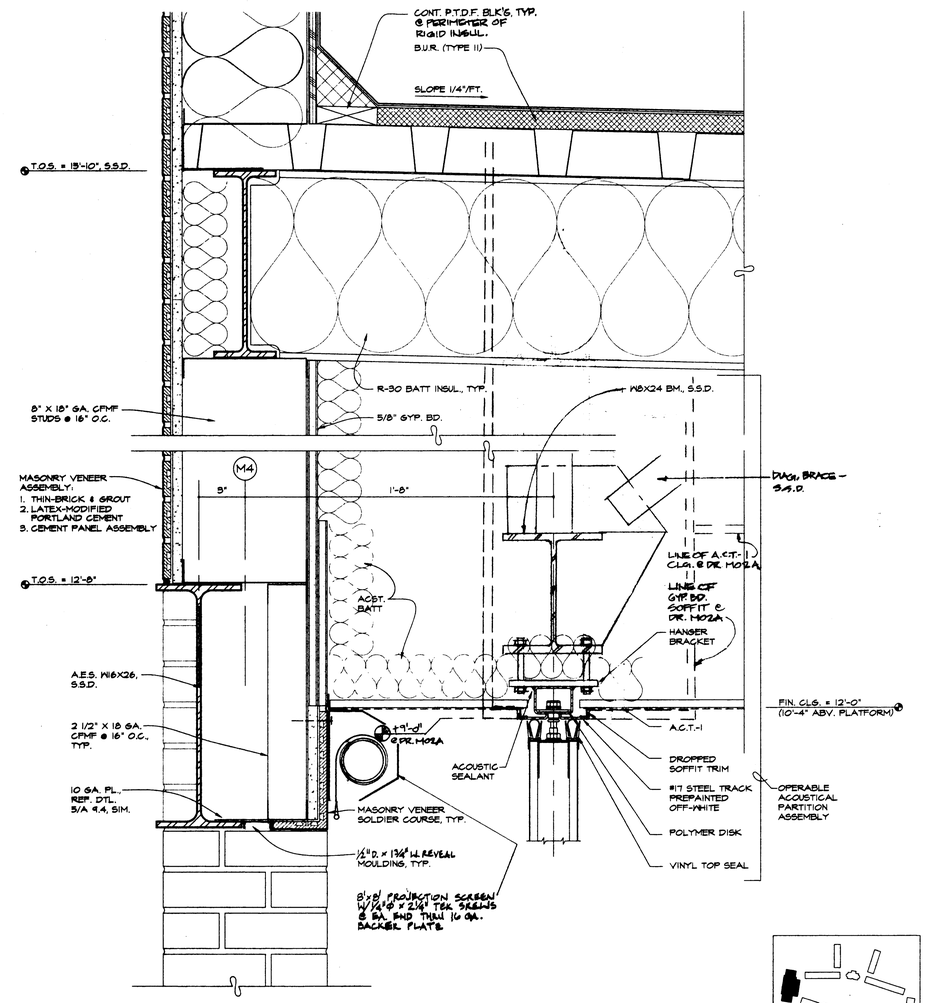

1 A3.15 DETAIL • PROSCENIUM AND B.U.R.

3" = 1'-0"

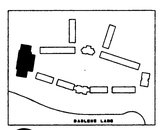

SITE KEY

HKA
Harlan Krusemark - Architect
4415 Cowell Road, Suite 230
Concord, CA 94521
Tel: 925.681.1905
Fax: 925.681.1906

LICENSED ARCHITECT HARLAN KRUSEMARK No. C23633 Exp. 9/30/01 STATE OF CALIFORNIA

Revisions	Date

HAWKINS SCHOOL (INCREMENT #1)

475 Darlene Lane
Tracy, CA 95377

Jefferson School District
7500 West Linne Road
Tracy, CA 95304

DSA FILE NO. 39-39
IDENTIFICATION STAMP
DIVISION OF THE STATE ARCHITECT
APPL 02 -102225
AC FLS SS
DATE AUG 2 4 2000

Sheet Title:
BUILDING M: MULTI-PURPOSE WALL SECTION & DETAILS

Printing Date / Purpose:
8/18/00 - DSA APPROVAL

Scale: As Noted
Project Number: 9903.00
Sheet Number:

A3.15

of Sheets

FILE: 9910/A3.15

COPYRIGHT © 2000 HARLAN KRUSEMARK - ARCHITECT (HKA) THESE DRAWINGS ARE PROPRIETARY DOCUMENTS OF HKA AND ARE NOT TO BE DISTRIBUTED, PUBLISHED OR REPRODUCED WITHOUT WRITTEN PERMISSION OF HKA.

EQUIPMENT SCHEDULE - ○

NO.	QTY.	SUPPLIER JSD	SUPPLIER KEC	INSTALLER JSD	INSTALLER KEC	ITEM	MANUFACTURER	MODEL NO.	C.W.	H.W.	DRN.	GAS	ELECTRICAL CURRENT	ELECTRICAL AMP	NOTES	ATTACHMENT DETAIL
1	1		X		X	COLD CABINET	GA SYSTEMS, INC.	C5	-	-	-	-	120/60/1	7.2	1	-
2	1		X		X	HOT CABINET	DUKE	TEHF-60-SS	-	-	-	-	208/60/1	17.3	22	-
3	1		X		X	FREEZER CABINET	GA SYSTEMS, INC.	F3	-	-	-	-	120/60/1	4.0		-
4	1		X		X	CASHIER STAND	GA SYSTEMS, INC.	D3	-	-	-	-	-	-		-
5	1		X		X	WALK-IN FREEZER/COOLER	MASTER - BILT	COLD STAR SERIES	-	-	-	-	208/60/1	VARIOUS	20,30,36	6C & 6D
6	3		X		X	HEATED TRANSPORT CABINET	METRO	C173-C8N	-	-	-	-	120/60/1	18	37	-
7	1	X		X		MILK COOLER	TRUE	TMC-58-S	-	-	-	-	120/60/1	6.3		-
8	2		X		X	WALL SHELF	GEMINI	WSD - 12" x 120"	-	-	-	-	-	-		-
9	1		X		X	DISPOSER	HOBART	FD3-150-D-2	1/2"	-	2"	-	208/60/3	6.6	18	-
10	1		X		X	DISHWASHER	CMA	S-AH	-	3/4"	2"	-	115/60/1	13	11	6A/
11	1		X		X	DISHTABLE	GEMINI	SDT - 60"	1/2"	1/2"	Note 23	-	-	-	6,7,8,24	6B
12	1		X		X	DISHTABLE	GEMINI	CDT - 32"	-	-	-	-	-	-	8	6B
13	1		X		X	DOUBLE CONVECTION OVEN	BLODGETT	ZEPHAIRE-G-DOUBLE	-	-	-	3/4"	115/60/1	6	3,19,28	6C & 6D
14	1		X		X	WORKTABLE	GEMINI	TBSS-2436	-	-	-	-	-	-	8,13	6B
15	1		X		X	SINK	GEMINI	3NSF23-2D24	2-1/2"	2-1/2"	2" EA.	-	-	-	8,12	6B
16	1		X		X	BAKER'S TABLE	GEMINI	MBSS-6036	-	-	-	-	-	-	8,13,25	6B
17	1		X		X	PREP TABLE/SINK	GEMINI	TSX8436	1/2"	1/2"	-	-	-	-	8,13,17	6B
18	1		X		X	MIXER	HOBART	D-330	-	-	-	-	208/60/3	3	2	6D
19	1		X		X	REACH-IN REFRIG./FREEZER	TRAULSEN	RDT1-32WUT	-	-	-	-	115/60/1	10.7	19,31	6C & 6D
20	1		X		X	ICE MAKER	MANITOWAC	QY-0424A	3/8"	-	1/2"	-	115/60/1	12.3	9	6C
21	1		X		X	ICE BIN	MANITOWAC	S-420	-	-	3/4"	-	-	-		6C
22	1		X		X	FILTER	SYSTEMS IV	DB-1000	1/2"	-	-	-	-	-	33	-
23	1		X		X	RANGE	AMER. RANGE CORP.	AR-4	-	-	-	3/4"	-	-	4	6B
24	1		X		X	EXHAUST HOOD	GEMINI	CWC1-200-5'X16'X2'H	-	-	-	-	120/60/1	-	5,15,16,29	5/A3.15
25	1		X		X	STEAM KETTLE	CLEVELAND	KGL-40-T	1/2"	1/2"	-	3/4"	120/60/1	10	4,26	6D SIM.
26	1	X		X		MICROWAVE	AMANA	RFS10S	-	-	-	-	120/60/1	20		-
27	5		X		X	SHELVING 86" H.	INTERMETRO	METRO MAX Q	-	-	-	-	-	-	19	6C
28	2		X		X	DUNNAGE RACKS 56" H.	INTERMETRO	HD SUPER	-	-	-	-	-	-	34	6C
29	1		X		X	COMBI OVEN/STEAMER	CLEVELAND	CCE-227X	1-1/2" & 1-3/4"	-	3"	-	208/60/3	94	19,27	6C & 6D
30	1		X		X	FILTER	SYSTEMS IV	-	-	-	-	-	-	-	32	-
31		X		X		ANTI-FATIGUE MAT	-	-	-	-	-	-	-	-		-
32	1		X		X	AIR CURTAIN	MARS	42 COMBI	-	-	-	-	120/60/1	5.1	14	-
33	3		X		X	TABLE SHELF	GEMINI	TS-1 10" W. x 54" L.	-	-	-	-	-	-		-
34	1		X		X	WORK TABLE	GEMINI	TSS3424	-	-	-	-	-	-	4	6B
35	12		X		X	SHELVING 86" H.	INTERMETRO	METROSEAL II	-	-	-	-	-	-	19	6C
36	2		X		X	S/S SHELVING 86" H.	INTERMETRO	SUPER ERECTA	-	-	-	-	-	-	19	6C
37	1		X		X	CONDENSATE HOOD	GEMINI	CH150-42"X42"X18"H	-	-	-	-	-	-	15,35	5/A3.15 SIM.

NOTES:

1. ACCESSORIES SHALL BE 1 BASKET DOLLY, MODEL LY10 AND 40 WIRE BASKETS, MODEL B13202, & 12 WIRE BASKETS, MODEL B13204 WITH EACH CABINET.
2. ACCESSORIES SHALL BE 1 EXTRA S/S 30-QT. BOWL; S/S TYPE B BEATER, D WHIP, AND ED DOUGH ARM; 1 BOWL TRUCK; 1 INGREDIENT CHUTE; AND 1 BOWL SCRAPER.
3. ACCESSORIES SHALL BE 1 DOCKING & LOCKING ASSEMBLY; 1 CART, MODEL CTRG-2; 1 ROLL-IN PAN RACK, MODEL RPR-L9; AND 2 BASKET DOLLIES WITH WIRE RACK BOTTOMS, MODEL DBRI-L WITH EACH UNIT.
4. PROVIDE SEISMIC ANCHORAGE AT FLOOR
5. ALL STAINLESS STEEL (S/S).
6. WELD DISPOSER COLLAR INTO SINK COMPARTMENT.
7. S/S SWITCH BRACKET FOR DISPOSER.
8. S/S LEGS & BULLET FEET.
9. POWER CORD BY INSTALLING CONTRACTOR.
10. WELD DISPOSER CONE INTO DRAINBOARD.
11. SUPPLY 2 RACKS #TR-1 & 2 RACKS #TR-3.
12. LEVER HANDLE DRAINS.
13. ROLLER DRAWER # RDS-S-2020, SEE DRAWINGS FOR QUANTITY.
14. INSTALL DOOR "MICRO SWITCH".
15. SEE MECH. DWGS. FOR ROOFTOP EXHAUST & MAKEUP AIR EQUIPMENT.
16. PROVIDE COMPLETE FIRE SUPRESSION SYSTEM INTREGAL WITH HOOD SIMILAR TO ANSUL "PIRANHA 13" SYSTEM. COORDINATE INTEGRATION OF SYSTEM W/FIRE SPRINKLER, FIRE ALARM, AND ELEC. & GAS SHUT-OFF SYSTEMS. (G.C. COORD.).
17. PROVIDE MARINE EDGE WHERE SHOWN.
18. PROVIDE AND INSTALL DELUXE PRE-RINSE SPRAY @ SCRAP SINK.
19. PROVIDE SEISMIC ANCHORAGE AT FLOOR, AND TOP OF UNIT TO WALL.
20. ACCESSORIES SHALL BE 3rd HINGE, INTERIOR NON-SKID RAMP, 36" H. KICKPLATES AT N. INTERIOR WALL, S/S WALL TRIM STRIPS, #K-58C SECURITY LATCH AT EACH DOOR, AND VINYL STRIP CURTAINS AT EACH COMPARTMENT, 2 LIGHTS @ FREEZER, 2 LIGHTS @ COOLER, AND CLOSURE PANEL TO CEILING.
21. PROVIDE WITH CASTER KIT INSTALLED.
22. COMPLETE WITH 8-#532 SS PANS, 1 - #TSS-SALAD FX TRAY SLIDE.
23. COORDINATE WITH DISPOSER #9.
24. 23" x 23" BOWL & RS23 RACK SLIDE.
25. COMPLETE WITH 2" THICK SOLID MAPLE BUTCHER BLOCK TOP.
26. PROVIDE WITH PAN CARRIER #PCK, 2" DIAMETER TANGENT DRAW-OFF VALVE WITH DRAIN STRAINER #TD-2, SPRING-ASSISTED, HINGED, ROTATABLE, DOMED STAINLESS STEEL COVER #CHS-40, DOUBLE PANTRY FAUCET #DPK, AND FAUCET MOUNTING BRACKET #FBKT.
27. PROVIDE WITH FLANGED FEET #FFA.
28. INSTALL WITH DRAFT DIVERTER.
29. COMPLETE W/ S/S FILTERS, GREASE CUP(S), 4 EQUALLY-SPACED 100 WATT STANDARD LIGHT FIXTURES, C-250 SWITCH, AND S/S CLG. & AIRSPACE ENCLOSURE PANELS.
30. COMPLETE WITH CONDENSING UNITS, PUMPS, ETC. MOUNTED ON ROOF AND SEISMICALLY SECURE.
31. PROVIDE WITH 4 STAINLESS STEEL SHELVES.
32. CONNECT FILTERED WATER TO OVEN/STEAMER UNIT.
33. CONNECT FILTERED WATER TO ICEMAKER.
34. 2 SHELVES #2448HDRK2 WITH REMOVABLE WIRE DECK @EA. LOCATION; POSTS # 54HPK2.
35. COMPLETE WITH 100 WATT STANDARD LIGHT FIXTURE AND 3" S/S CLOSURE SKIRT @ CEILING.
36. "STUCCO ALUMINUM" FINISH EXTERIOR AND INTERIOR.
37. 4TH CABINET SUPPLIED BY OWNER.

GENERAL EQUIPMENT NOTES:

1. G.C. SHALL COORDINATE BETWEEN EQUIPMENT ITEMS AND TRADES TO ENSURE A COMPLETE OPERATIONAL INSTALLATION OF KITCHEN EQUIPMENT, INCLUDING FURNISHING ALL MISCELLANEOUS ANCHORS AND ACCESSORIES REQUIRED.
2. G.C. SHALL PROVIDE FINAL POWER, GAS, PLUMBING, ETC. CONNECTIONS PER THE CALFORNIA BUILDING CODE AND THE LOCAL HEALTH DEPARTMENT.
3. ALL EXPOSED AND SEMI-EXPOSED BOLTS, SCREWS, ETC, SHALL BE STAINLESS STEEL.
4. SEE 2/29.2 FOR EXHAUST HOOD MOUNTING & SHAFT CONSTRUCTION.
5. SUPPLY & INSTALL 40"L. S/S CORNER GUARDS SIM. TO BOBRICK #B-633 INSTALLED W/ #5 X 1 1/4" S/S FLAT HEAD SCREWS COUNTERSUNK @ 12" O.C. @ ALL OUTSIDE WALL CORNERS IN KITCHEN M16 & DISHWASH M21 ROOMS.

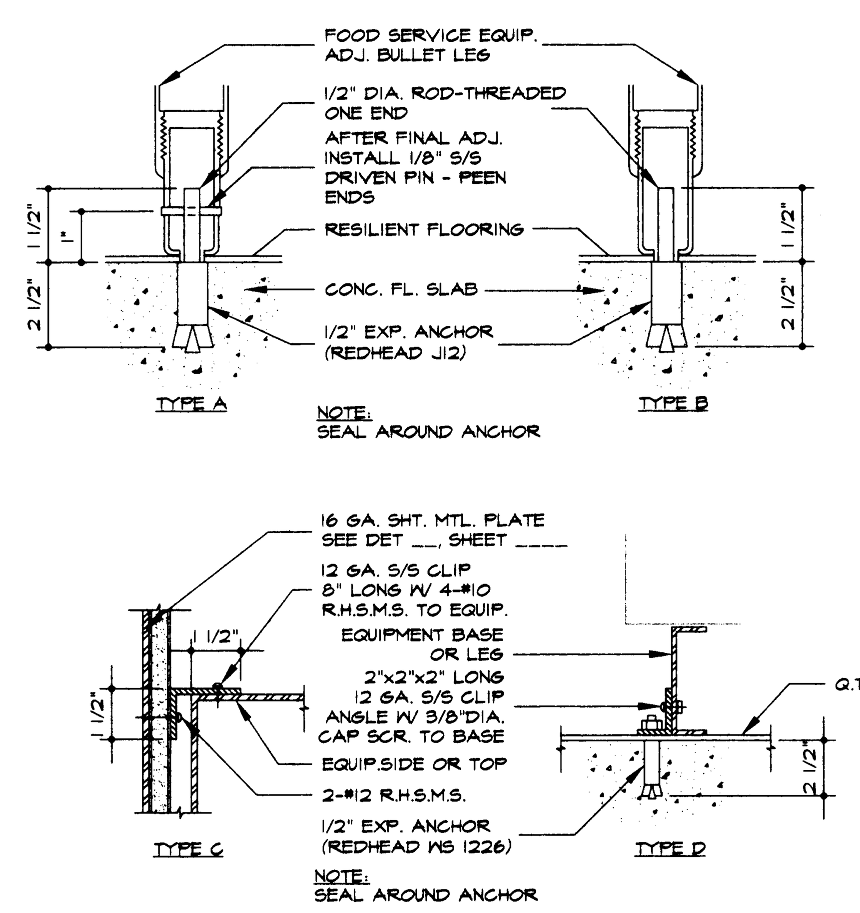

6 DETAIL - KITCHEN EQUIPMT. HOLD-DOWNS
A4.1 SCALE: N.T.S.
(FOR ADDITIONAL DETAILS, SEE SMACNA "GUIDELINES FOR SEIMIC RESTRAINTS OF KITCHMENT EQUIPMENT")

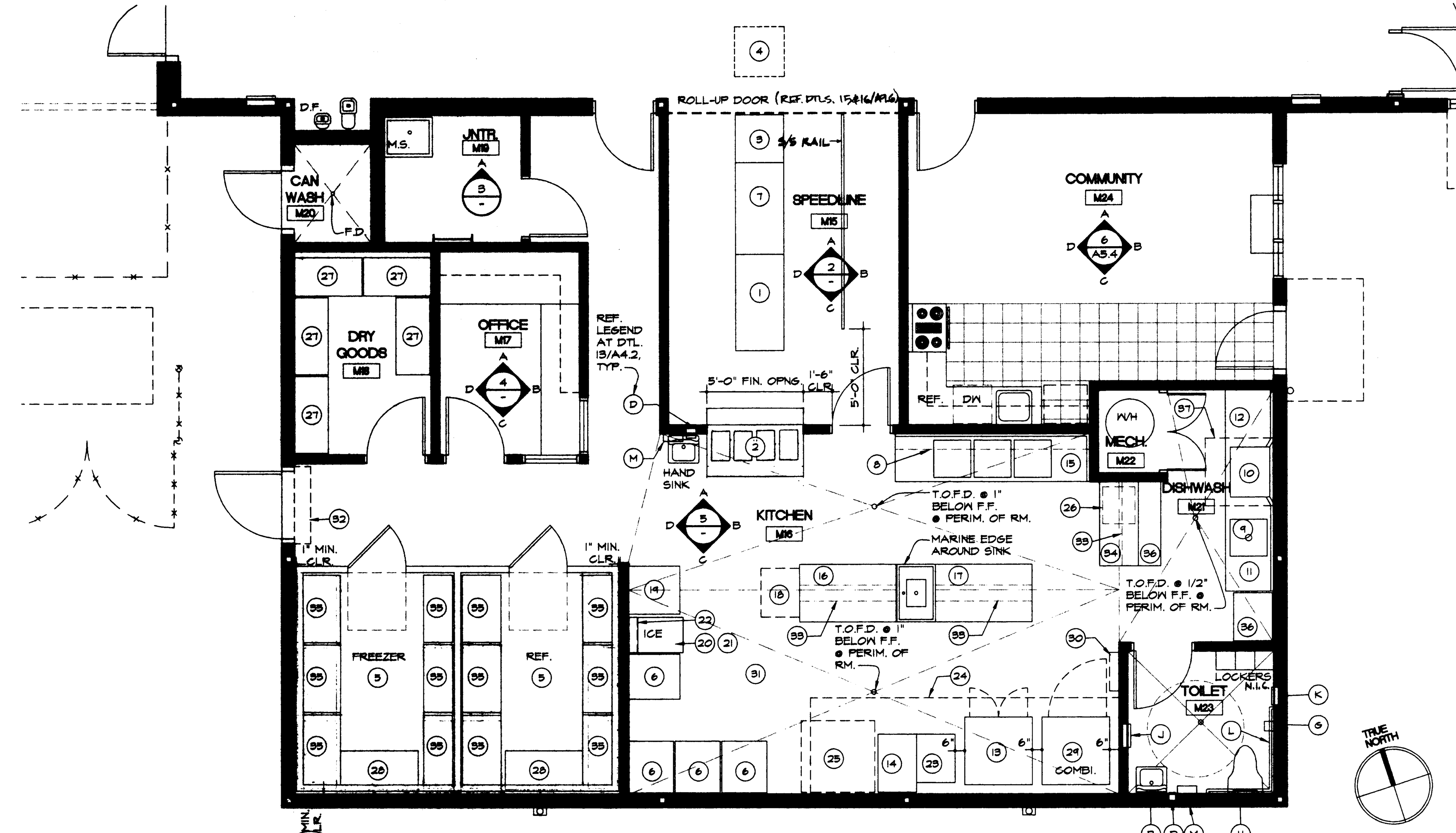

1 ENLARGED KITCHEN PLAN
A4.1 SCALE: 1/4" = 1'-0"

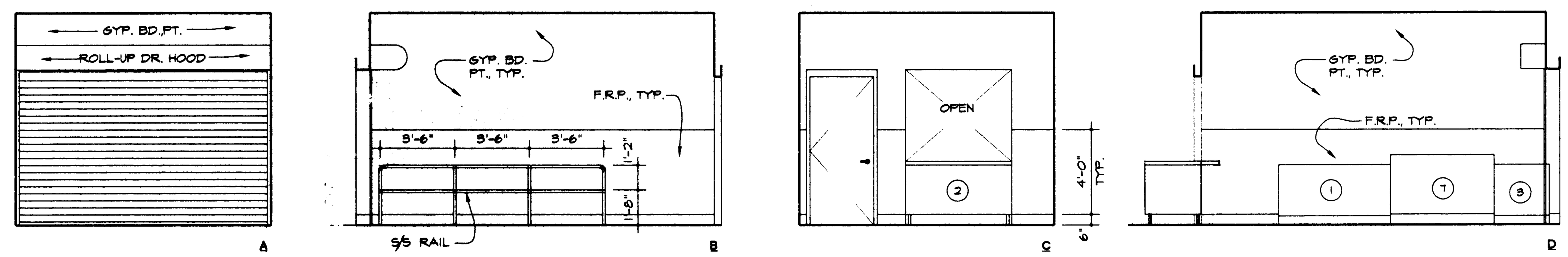

2 SPEEDLINE - M15
A4.1 SCALE: 1/4" = 1'-0"

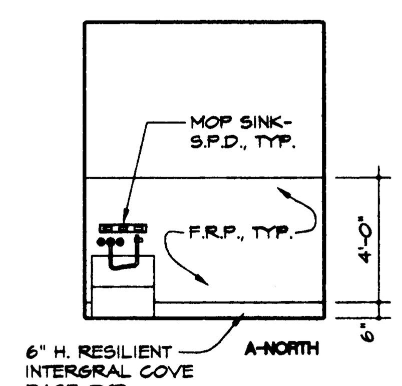

3 JANITOR - M19
A4.1 SCALE: 1/4" = 1'-0"

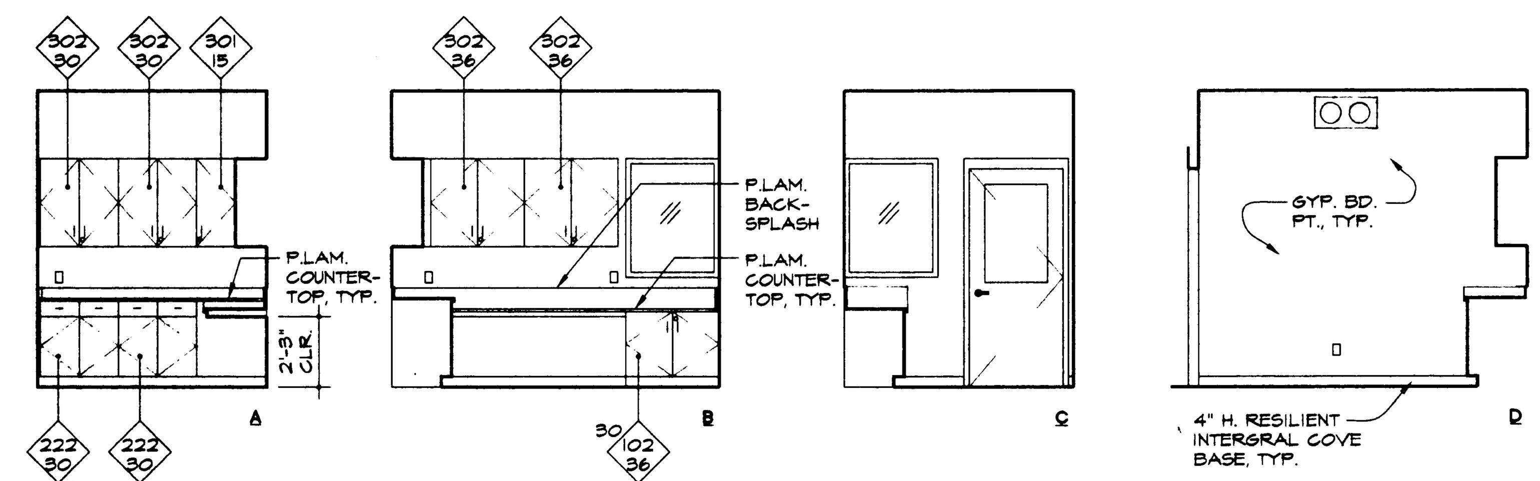

4 OFFICE - M17
A4.1 SCALE: 1/4" = 1'-0"

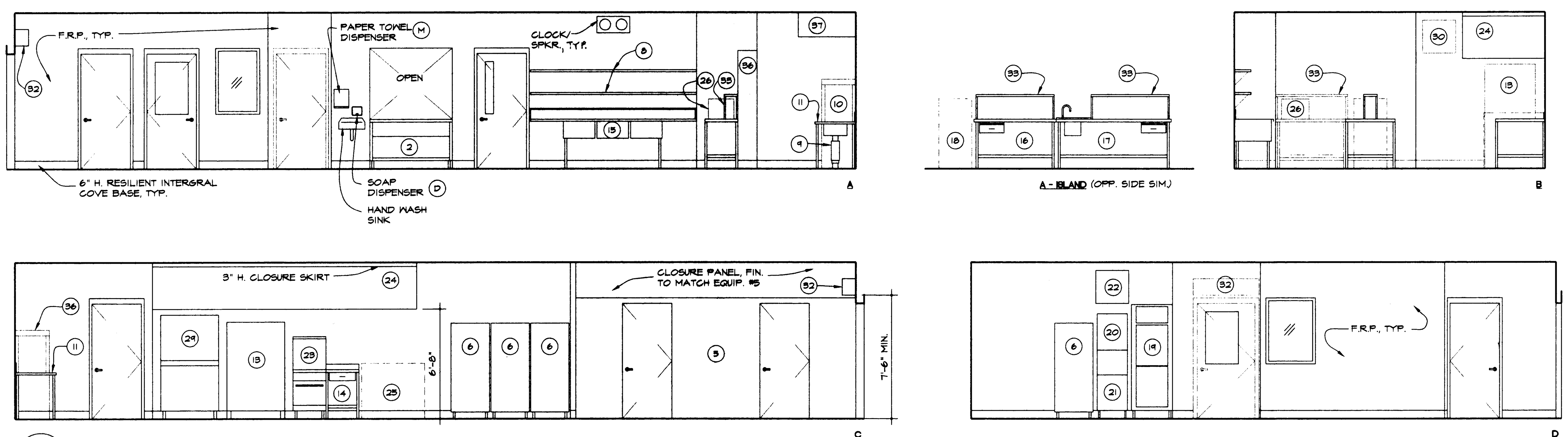

5 KITCHEN ELEVATIONS
A4.1 SCALE: 1/4" = 1'-0"

HKA
Harlan Krusemark - Architect
4415 Cowell Road, Suite 230
Concord, CA 94521
Tel: 925.681.1905
Fax: 925.681.1906

LICENSED ARCHITECT HARLAN KRUSEMARK No. C23833 Exp. 9/30/01 STATE OF CALIFORNIA

Revisions	Date
△	
△	
△	
△	
△	
△	

HAWKINS SCHOOL
(INCREMENT #1)

475 Darlene Lane
Tracy, CA 95377

Jefferson School District
7500 West Linne Road
Tracy, CA 95304

DSA FILE NO. 39-39
IDENTIFICATION STAMP
DIVISION OF THE STATE ARCHITECT
APPL 02 -102225
AC FLS SS
DATE AUG 2 4 2000

Sheet Title:
KITCHEN: ENLARGED PLAN, ELEVATIONS, DETAILS, EQUIPMENT SCHEDULE

Printing Date / Purpose:
8/18/00 - DSA APPROVAL

Scale: As Noted
Project Number: 9903.00
Sheet Number:

A4.1

of Sheets

FILE: 9910/A4.1

COPYRIGHT © 2000 HARLAN KRUSEMARK - ARCHITECT (HKA) THESE DRAWINGS ARE PROPRIETARY DOCUMENTS OF HKA AND ARE NOT TO BE DISTRIBUTED, PUBLISHED OR REPRODUCED WITHOUT WRITTEN PERMISSION OF HKA.

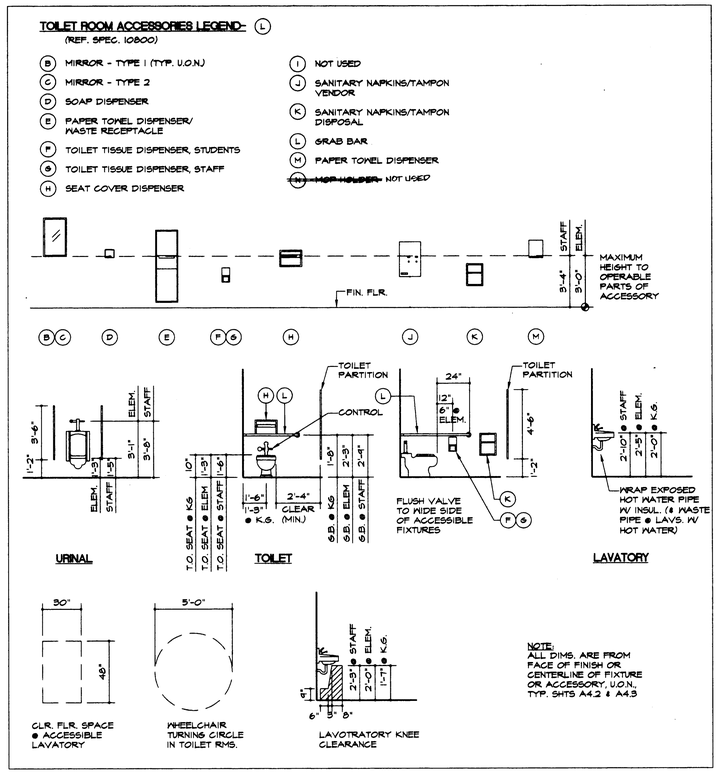

13 A4.2 TYPICAL ACCESSORY TYPES AND MOUNTING HEIGHTS
SCALE: 1/4"= 1'-0"

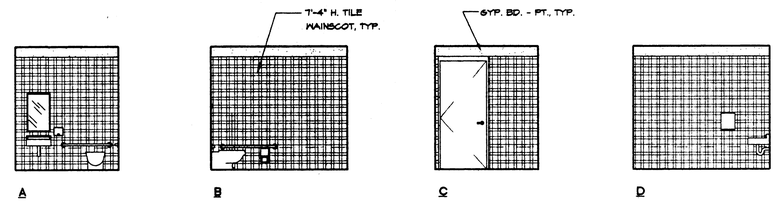

8 A4.2 K04 (K05 OPP. HAND) - TOILET
SCALE: 1/4"= 1'-0"

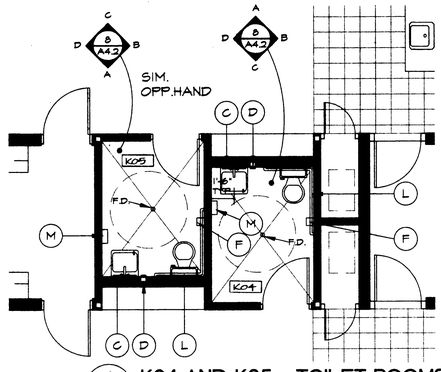

4 A4.2 K04 AND K05 - TOILET ROOMS
SCALE: 1/4"= 1'-0"

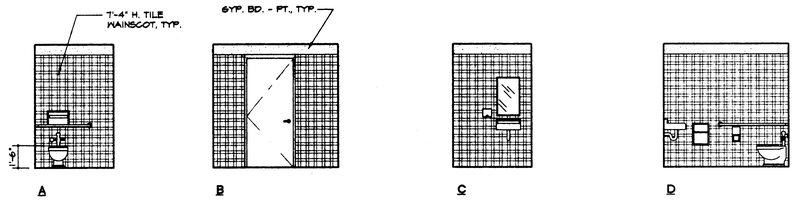

7 A4.2 A05 - NURSE TOILET
SCALE: 1/4"= 1'-0"

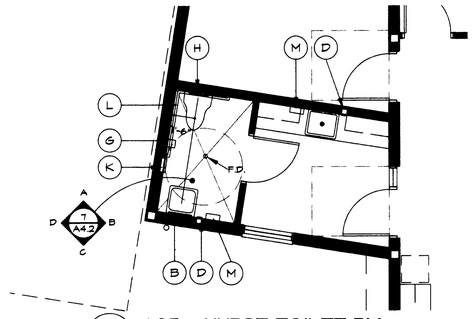

3 A4.2 A05 - NURSE TOILET RM.
SCALE: 1/4"= 1'-0"

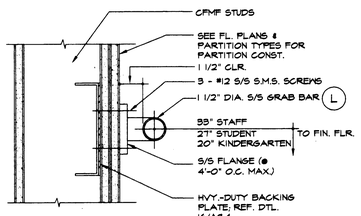

12 A4.2 GRAB BAR DETAIL
3" = 1'-0"

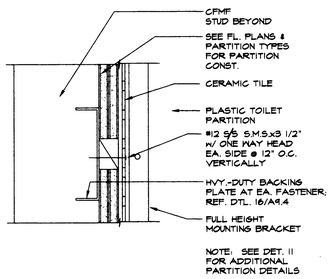

10 A4.2 TOILET PARTITION WALL CONNECTION
3" = 1'-0"

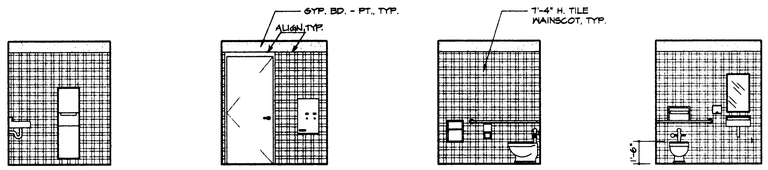

TOILET RM. M13 SHOWN; ROOM M14 SIMILAR - OPPOSITE HAND.

6 A4.2 M13 (M14 OPP. HAND.) - TOILET
SCALE: 1/4"= 1'-0"

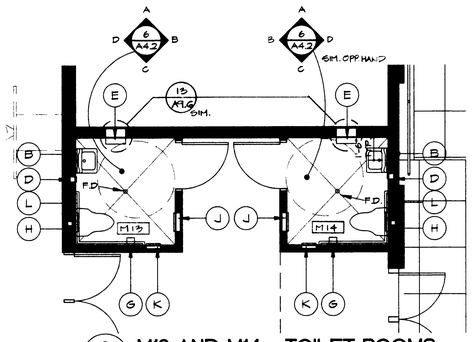

2 A4.2 M13 AND M14 - TOILET ROOMS
SCALE: 1/4"= 1'-0"

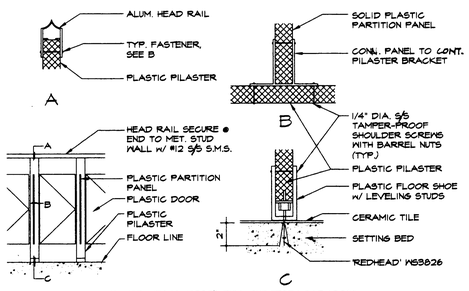

NOTE: 'REDHEAD' KS3826 PULL OUT TEST LOAD 1008#

11 A4.2 TOILET PARTITION DETAILS
N.T.S.

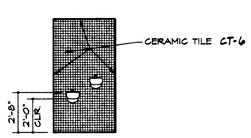

9 A4.2 DRINKING FOUNTAIN
SCALE: 1/4"= 1'-0"

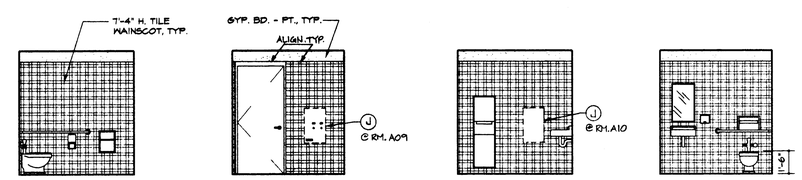

TOILET RM. A10 SHOWN; ROOM A09 SIMILAR - OPPOSITE HAND (EXCEPT ELEV. 'B').

5 A4.2 A10 (A09 OPP. HAND) - TOILET
SCALE: 1/4"= 1'-0"

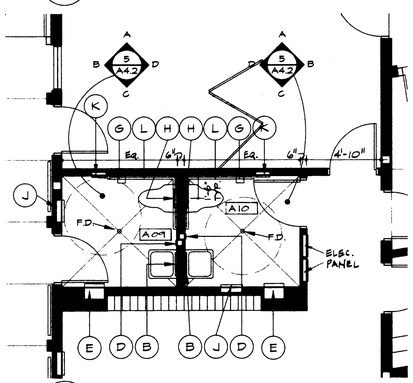

1 A4.2 A09 AND A10 - TOILET ROOMS
SCALE: 1/4"= 1'-0"

HKA
Harlan Krusemark - Architect
4415 Cowell Road, Suite 230
Concord, CA 94521
Tel: 925.681.1905
Fax: 925.681.1906

LICENSED ARCHITECT HARLAN KRUSEMARK No. C23833 Exp. 9/30/01 STATE OF CALIFORNIA

Revisions	Date

HAWKINS SCHOOL
(INCREMENTS #1 & #2)

475 Darlene Lane
Tracy, CA 95377

Jefferson School District
7500 West Linne Road
Tracy, CA 95304

DSA FILE NO. 39-39
IDENTIFICATION STAMP
DIVISION OF THE STATE ARCHITECT
APPL 02 -102225
AC FLS SS
DATE AUG 2 4 2000

Sheet Title:
TOILET ROOM ENLARGED PLANS, ELEVATIONS, DETAILS AND NOTES

Printing Date / Purpose:
8/18/00 - DSA APPROVAL

Scale: 1/4" = 1'-0" U.N.O.
Project Number: 9903.00
Sheet Number:

A4.2

of Sheets

FILE: 9910/A4.2

COPYRIGHT © 2000 HARLAN KRUSEMARK - ARCHITECT (HKA) THESE DRAWINGS ARE PROPRIETARY DOCUMENTS OF HKA AND ARE NOT TO BE DISTRIBUTED, PUBLISHED OR REPRODUCED WITHOUT WRITTEN PERMISSION OF HKA.

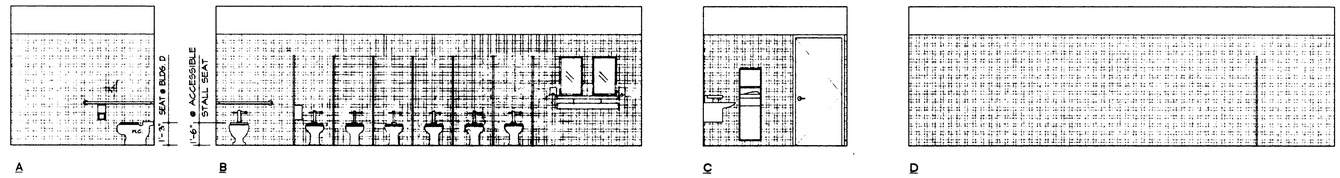

9 / A4.3 D09 TYP. GIRLS MULTI-TOILET ROOM
SCALE: 1/4"= 1'-0"

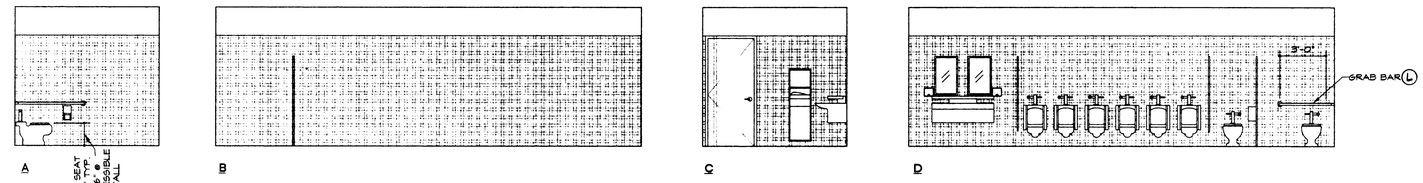

8 / A4.3 D08 TYP. BOYS MULTI-TOILET ROOM
SCALE: 1/4"= 1'-0"

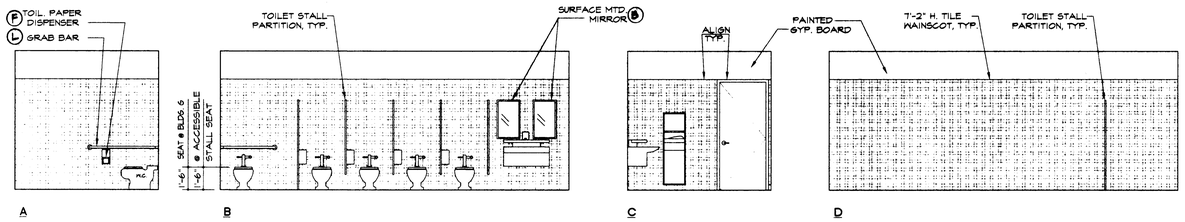

7 / A4.3 G13 TYP. GIRLS MULTI-TOILET ROOM
SCALE: 1/4"= 1'-0"

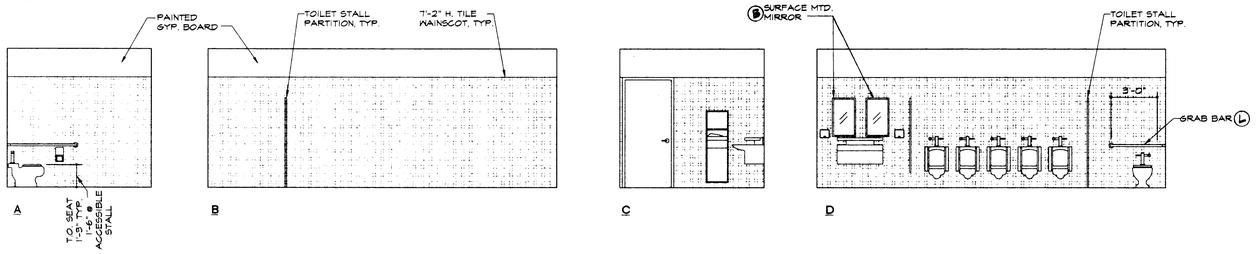

6 / A4.3 G12 TYP. BOYS MULTI-TOILET ROOM
SCALE: 1/4"= 1'-0"

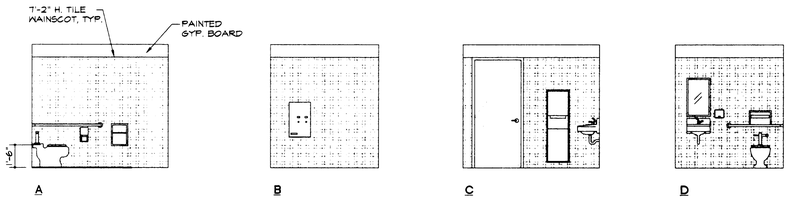

5 / A4.3 D07 AND G10 STAFF TOILET ROOM
SCALE: 1/4"= 1'-0"

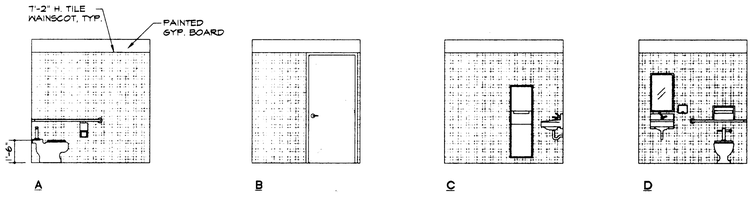

4 / A4.3 G06 - SPECIAL DAY CLASS TOILET
SCALE: 1/4"= 1'-0"

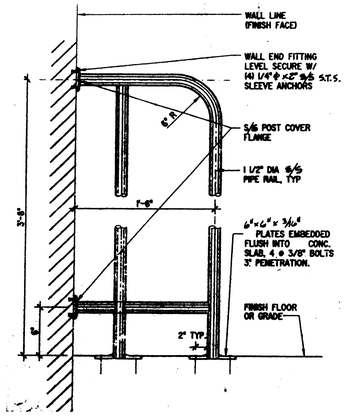

10 / A4.3 DRINKING FOUNTAIN WINGWALL
N.T.S.

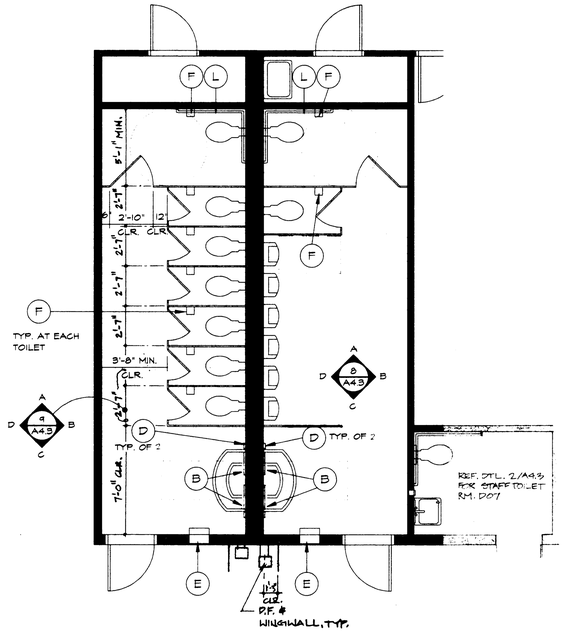

3 / A4.3 D08 AND D09 MULTI-TOILET ROOMS
SCALE: 1/4"= 1'-0"

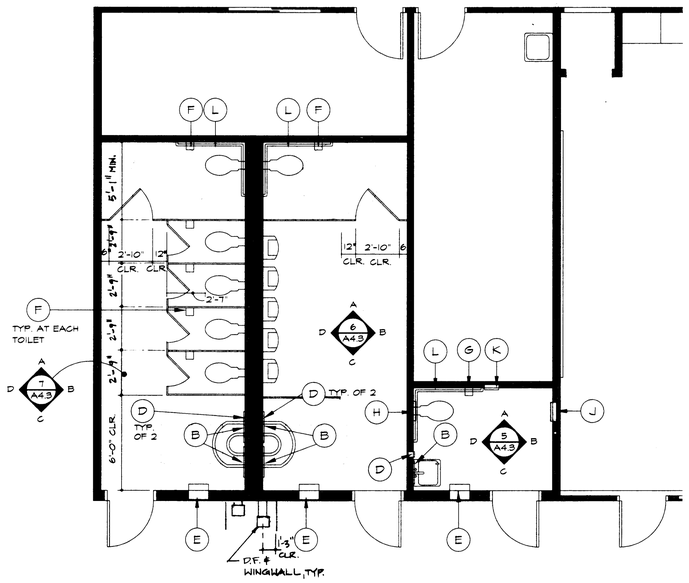

2 / A4.3 G12 AND G13 MULTI-TOILET ROOMS/ TYP. STAFF TOILET
SCALE: 1/4"= 1'-0"

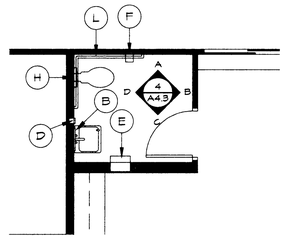

1 / A4.3 G06 SPECIAL DAY CLASS TOILET
SCALE: 1/4"= 1'-0"

HKA
Harlan Krusemark - Architect
4415 Cowell Road, Suite 230
Concord, CA 94521
Tel: 925.681.1905
Fax: 925.681.1906

LICENSED ARCHITECT HARLAN KRUSEMARK No. C23603 Exp. 5/30/01 STATE OF CALIFORNIA

Revisions	Date

HAWKINS SCHOOL (INCREMENT #2)

475 Darlene Lane
Tracy, CA 95377

Jefferson School District
7500 West Linne Road
Tracy, CA 95304

DSA FILE NO. 39-39
IDENTIFICATION STAMP
DIVISION OF THE STATE ARCHITECT
APPL 02 -102225
ACT FLS
DATE Aug 2 8 2000

Sheet Title:
TOILET ROOM ENLARGED PLANS, ELEVATIONS, NOTES

Printing Date / Purpose:
8/18/00 - DSA APPROVAL

Scale: 1/4" = 1'-0" U.N.O.
Project Number: 9903.00
Sheet Number:

A4.3

of Sheets

FILE: 9910/A4.3

COPYRIGHT © 2000 HARLAN KRUSEMARK - ARCHITECT (HKA) THESE DRAWINGS ARE PROPRIETARY DOCUMENTS OF HKA AND ARE NOT TO BE DISTRIBUTED, PUBLISHED OR REPRODUCED WITHOUT WRITTEN PERMISSION OF HKA.

F:\9910-Tracy\Dwg\A4.3.dwg Sat Aug 19 13:59:10 2000

15

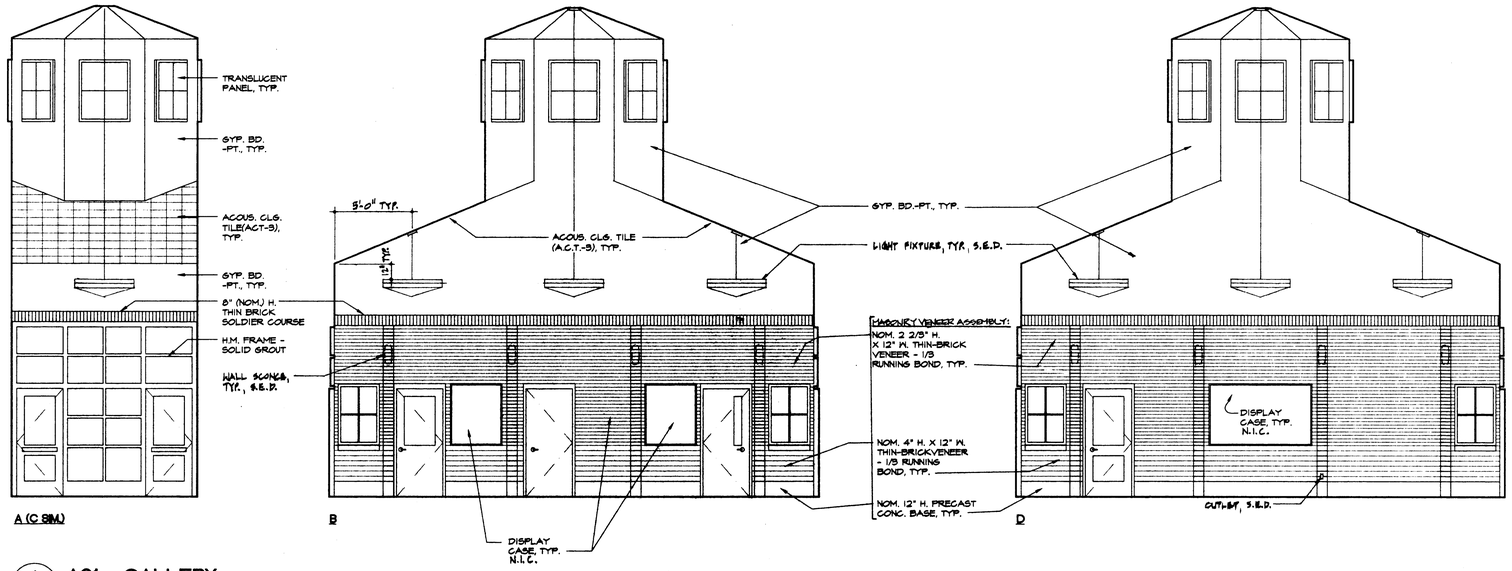

1 / A5.1 A01 - GALLERY
SCALE: 1/4"= 1'-0"

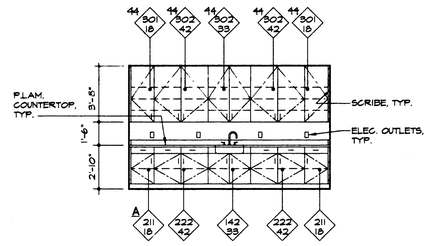

2 / A5.1 A03 - WORKROOM
SCALE: 1/4"= 1'-0"

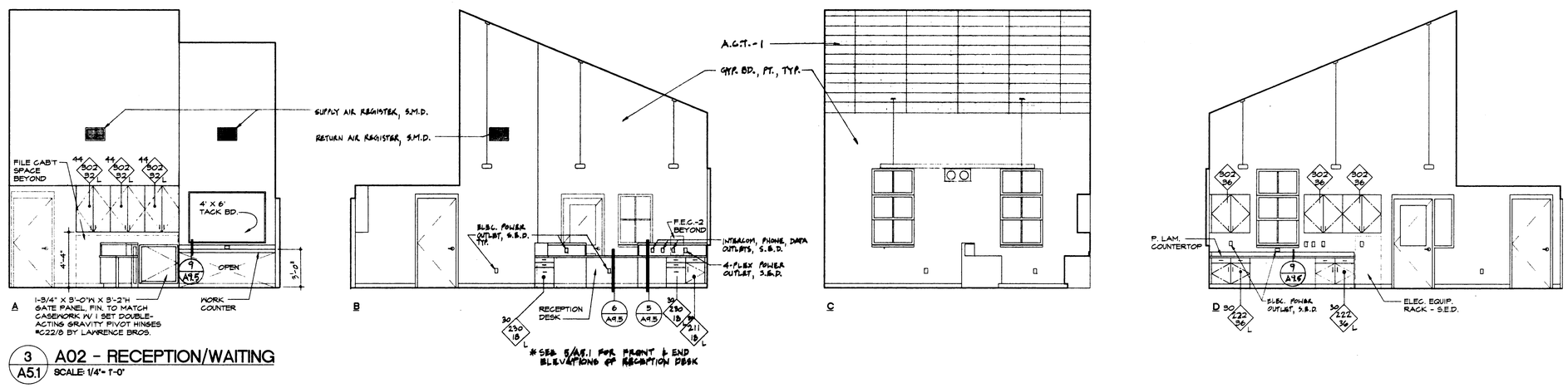

3 / A5.1 A02 - RECEPTION/WAITING
SCALE: 1/4"= 1'-0"

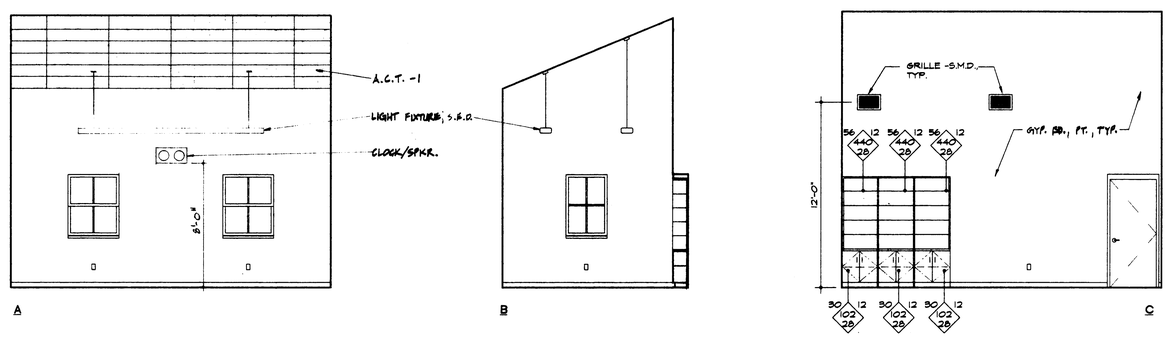

4 / A5.1 A07 - PRINCIPAL'S OFFICE
SCALE: 1/4"= 1'-0"

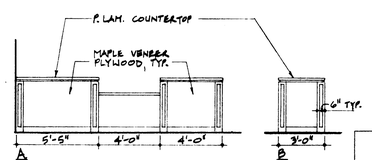

5 / A5.1 A02 - RECEPTION DESK
SCALE: 1/4" = 1'-0"

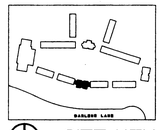

SITE KEY

HKA
Harlan Krusemark - Architect
4415 Cowell Road, Suite 230
Concord, CA 94521
Tel: 925.681.1905
Fax: 925.681.1906

HARLAN KRUSEMARK ARCHITECT LICENSED No. C23833 Exp. 9/30/01 STATE OF CALIFORNIA

Revisions	Date

HAWKINS SCHOOL (INCREMENT #1)

475 Darlene Lane
Tracy, CA 95377

Jefferson School District
7500 West Linne Road
Tracy, CA 95304

DSA FILE NO. 39-39
IDENTIFICATION STAMP
DIVISION OF THE STATE ARCHITECT
APPL 02 - 102225
AC FLS SS
DATE AUG 2 4 2000

Sheet Title:
BUILDING A: ADMINISTRATION
INTERIOR ELEVATIONS

Printing Date / Purpose:
8/18/00 - DSA APPROVAL

Scale: 1/4" = 1'-0"
Project Number: 9903.00
Sheet Number:

A5.1

of Sheets

FILE: 9910/A5.1

COPYRIGHT © 2000 HARLAN KRUSEMARK - ARCHITECT (HKA) THESE DRAWINGS ARE PROPRIETARY DOCUMENTS OF HKA AND ARE NOT TO BE DISTRIBUTED, PUBLISHED OR REPRODUCED WITHOUT WRITTEN PERMISSION OF HKA.

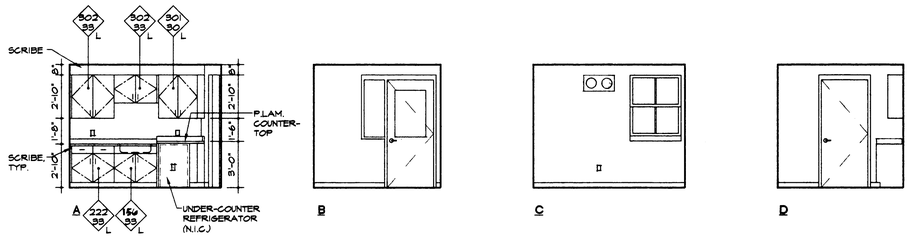

1 A5.2 A04 - NURSE
SCALE: 1/4"= 1'-0"

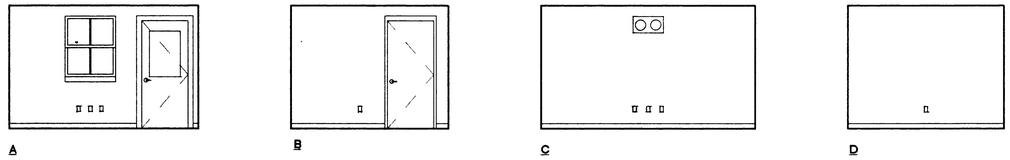

2 A5.2 A06 - VICE PRINCIPAL
SCALE: 1/4"= 1'-0"

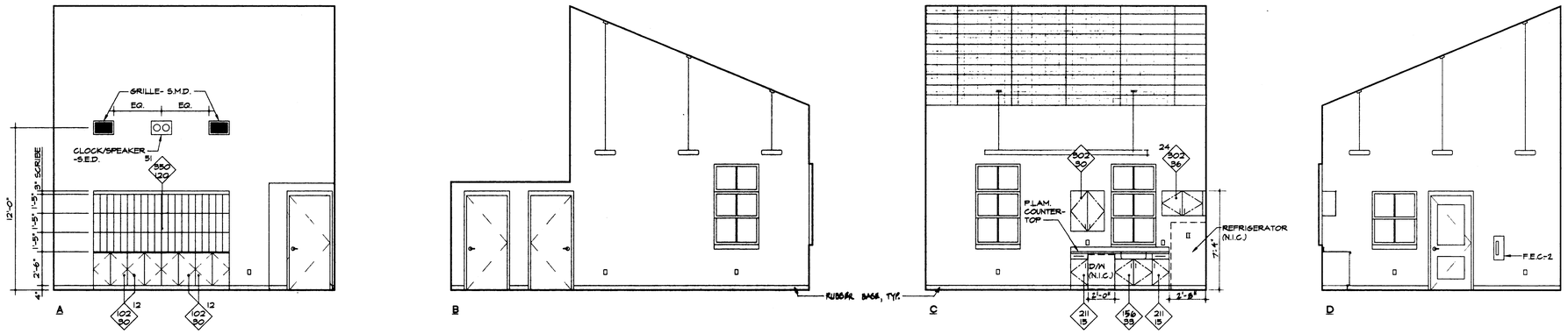

3 A5.2 A08 - STAFF LOUNGE
SCALE: 1/4"= 1'-0"

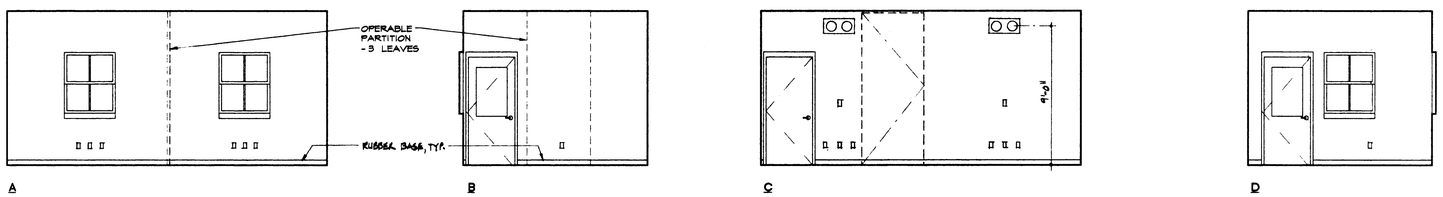

4 A5.2 A13 - OFFICE
SCALE: 1/4"= 1'-0"

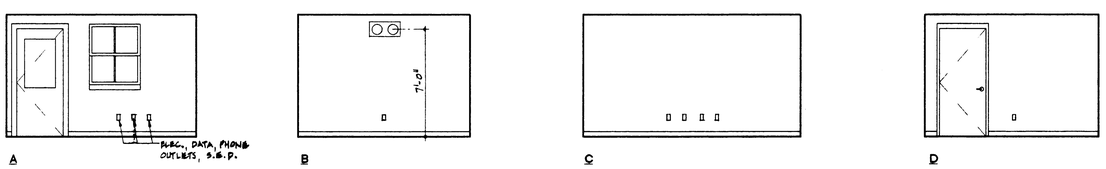

5 A5.2 A12 - OFFICE
SCALE: 1/4"= 1'-0"

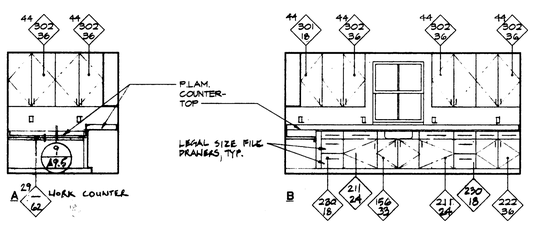

6 A5.2 A11 - WORKROOM
SCALE: 1/4"= 1'-0"

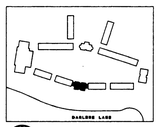

SITE KEY

HKA

Harlan Krusemark - Architect
4415 Cowell Road, Suite 230
Concord, CA 94521
Tel: 925.681.1905
Fax: 925.681.1906

LICENSED ARCHITECT HARLAN KRUSEMARK No. C23833 Exp. 9/30/01 STATE OF CALIFORNIA

Revisions	Date
△	
△	
△	
△	
△	
△	

HAWKINS SCHOOL
(INCREMENT #1)

475 Darlene Lane
Tracy, CA 95377

Jefferson School District
7500 West Linne Road
Tracy, CA 95304

DSA FILE NO. 39-39
IDENTIFICATION STAMP
DIVISION OF THE STATE ARCHITECT
APPL 02 -102225
ACCT FLS SS
DATE AUG 2 4 2000

Sheet Title:
BUILDING A: ADMINISTRATION
INTERIOR ELEVATIONS

Printing Date / Purpose:
8/18/00 - DSA APPROVAL

Scale: 1/4" = 1'-0"
Project Number: 9903.00
Sheet Number:

A5.2

of Sheets

FILE: 9910/A5.2

COPYRIGHT © 2000 HARLAN KRUSEMARK - ARCHITECT (HKA) THESE DRAWINGS ARE PROPRIETARY DOCUMENTS OF HKA AND ARE NOT TO BE DISTRIBUTED, PUBLISHED OR REPRODUCED WITHOUT WRITTEN PERMISSION OF HKA.

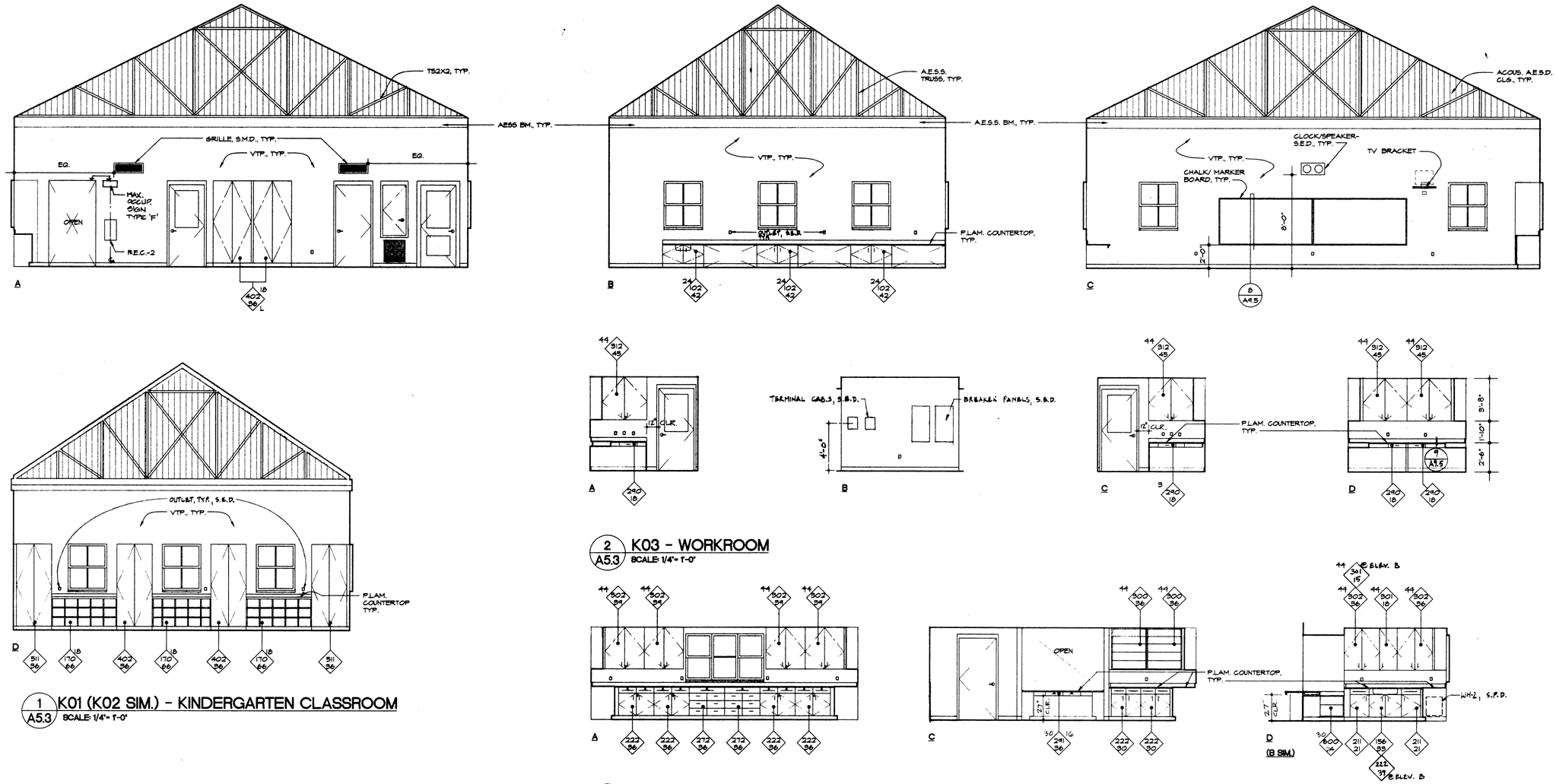

1 A5.3 K01 (K02 SIM.) - KINDERGARTEN CLASSROOM
SCALE: 1/4"= 1'-0"

2 A5.3 K03 - WORKROOM
SCALE: 1/4"= 1'-0"

3 A5.3 L02 - WORKROOM
SCALE: 1/4"= 1'-0"

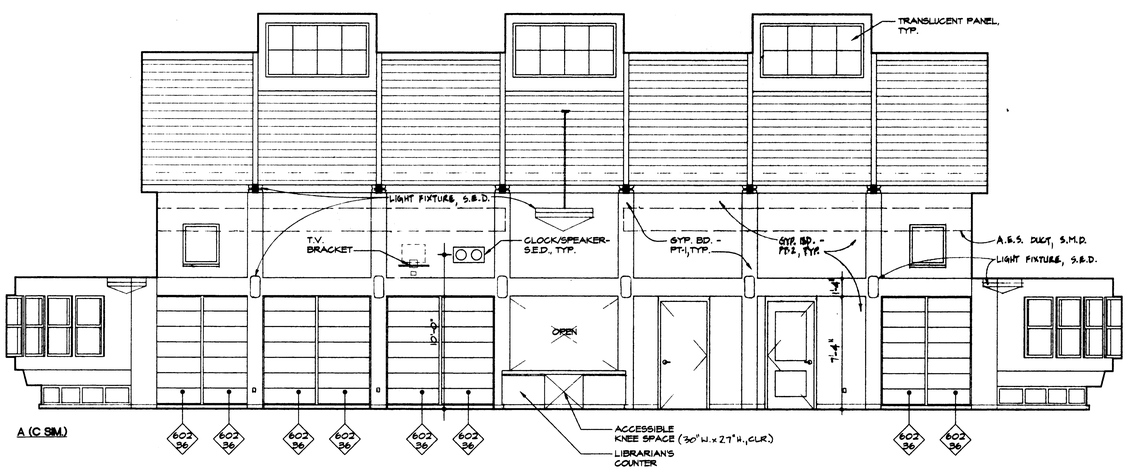

4 A5.3 L01 - LIBRARY
SCALE: 1/4"= 1'-0"

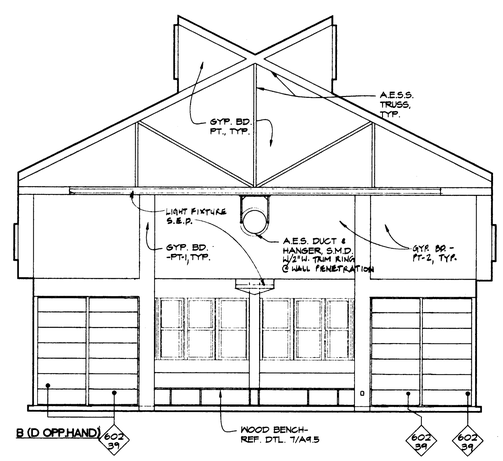

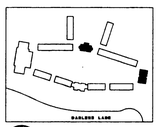

SITE KEY

HKA
Harlan Krusemark - Architect
4415 Cowell Road, Suite 230
Concord, CA 94521
Tel: 925.681.1965
Fax: 925.681.1906

Revisions | Date

HAWKINS SCHOOL
(INCREMENT #1)

475 Darlene Lane
Tracy, CA 95377

Jefferson School District
7500 West Linne Road
Tracy, CA 95304

DSA FILE NO. 39-39
IDENTIFICATION STAMP
DIVISION OF THE STATE ARCHITECT
APPL 02 -102225
AC FLS SS CCC
DATE AUG 2 4 2000

Sheet Title:
BUILDING K: KINDERGARTEN
BUILDING L: LIBRARY
INTERIOR ELEVATIONS

Printing Date / Purpose:
8/18/00 - DSA APPROVAL

Scale: 1/4" = 1'-0"
Project Number: 9903.00
Sheet Number:

A5.3

of Sheets

FILE: 9910/A5.3

COPYRIGHT © 2000 HARLAN KRUSEMARK - ARCHITECT (HKA) THESE DRAWINGS ARE PROPRIETARY DOCUMENTS OF HKA AND ARE NOT TO BE DISTRIBUTED, PUBLISHED OR REPRODUCED WITHOUT WRITTEN PERMISSION OF HKA.

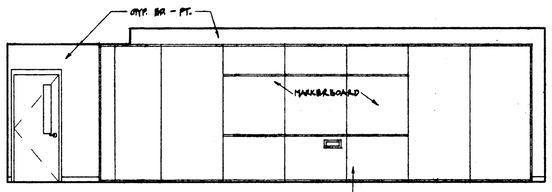

1 A5.4 M02 - SWING ROOM
SCALE: 1/4"= 1'-0"

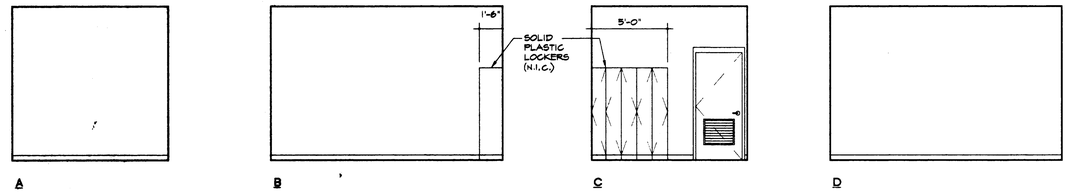

2 A5.4 M03 (M05 SIM.) LOCKERS
SCALE: 1/4"= 1'-0"

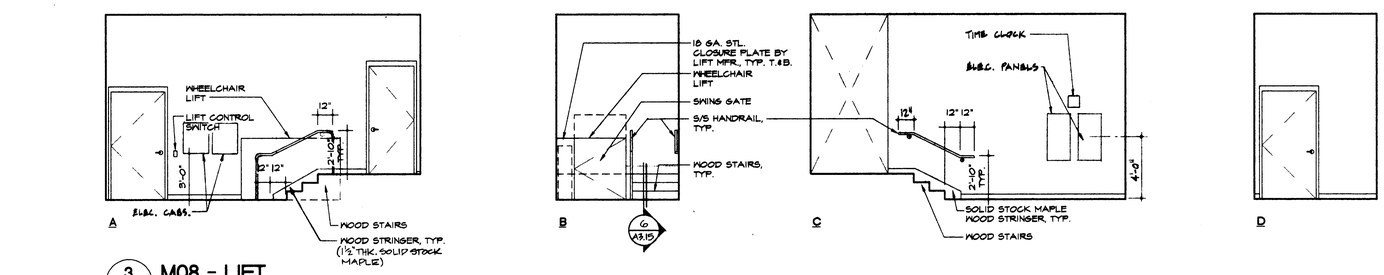

3 A5.4 M08 - LIFT
SCALE: 1/4"= 1'-0"

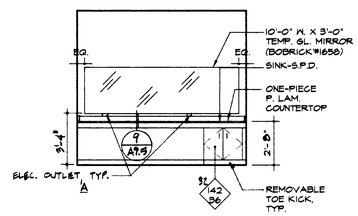

4 A5.4 M09 - DRESSING
SCALE: 1/4"= 1'-0"

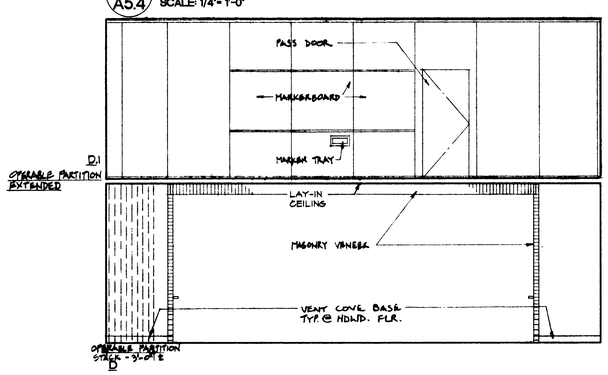

5 A5.4 M10 - PLATFORM
SCALE: 1/4"= 1'-0"

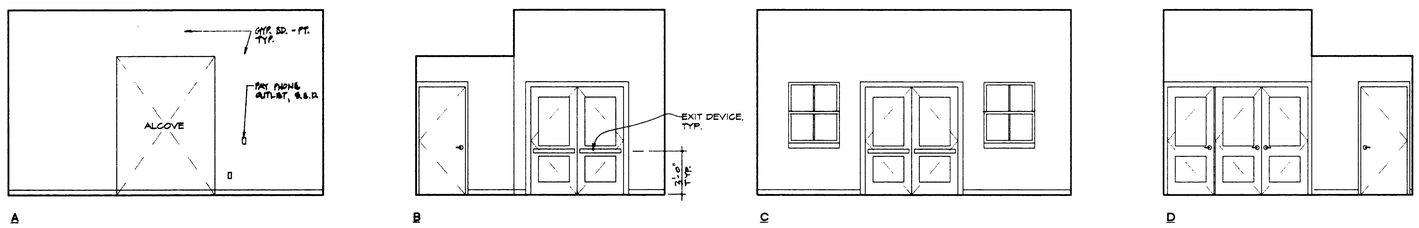

6 A5.4 M12 - LOBBY
SCALE: 1/4"= 1'-0"

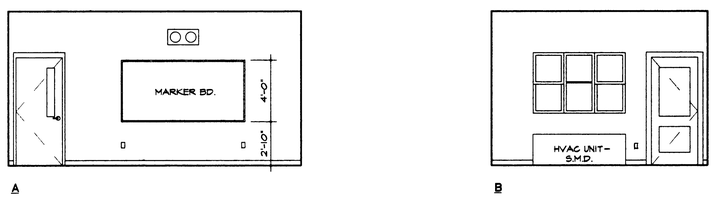

7 A5.4 M24 - COMMUNITY ROOM
SCALE: 1/4"= 1'-0"

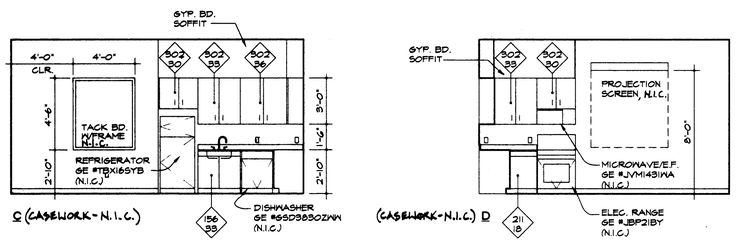

HKA
Harlan Krusemark - Architect
4415 Cowell Road, Suite 230
Concord, CA 94521
Tel: 925.681.1905
Fax: 925.681.1906

Revisions Date

HAWKINS SCHOOL
(INCREMENT #1)

475 Darlene Lane
Tracy, CA 95377

Jefferson School District
7500 West Linne Road
Tracy, CA 95304

DSA FILE NO. 39-39
IDENTIFICATION STAMP
DIVISION OF THE STATE ARCHITECT
APPL 02 -102225
AC FLS DATE AUG 2 4 2000

Sheet Title:
BUILDING M: MULTI-PURPOSE
INTERIOR ELEVATIONS

Printing Date / Purpose:
8/18/00 - DSA APPROVAL

Scale: 1/4" = 1'-0"
Project Number: 9903.00
Sheet Number:

A5.4

of Sheets

FILE: 9910/A5.4

COPYRIGHT © 2000 HARLAN KRUSEMARK - ARCHITECT (HKA) THESE DRAWINGS ARE PROPRIETARY DOCUMENTS OF HKA AND ARE NOT TO BE DISTRIBUTED, PUBLISHED OR REPRODUCED WITHOUT WRITTEN PERMISSION OF HKA.

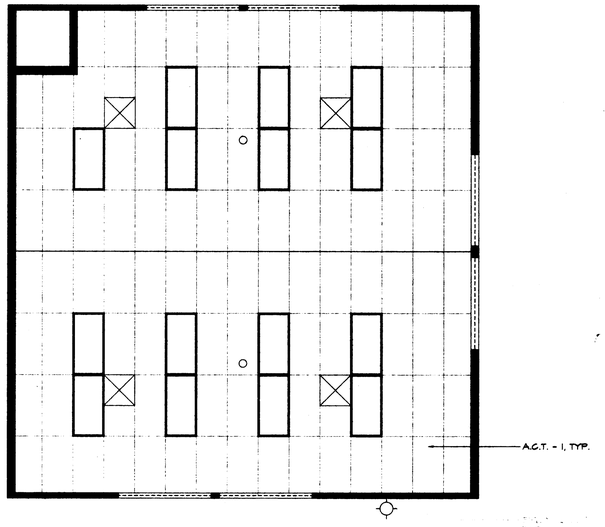

5 A5.5 TYP. CLASSROOM REFLECTED CEILING PLAN
SCALE: 1/4" = 1'-0"

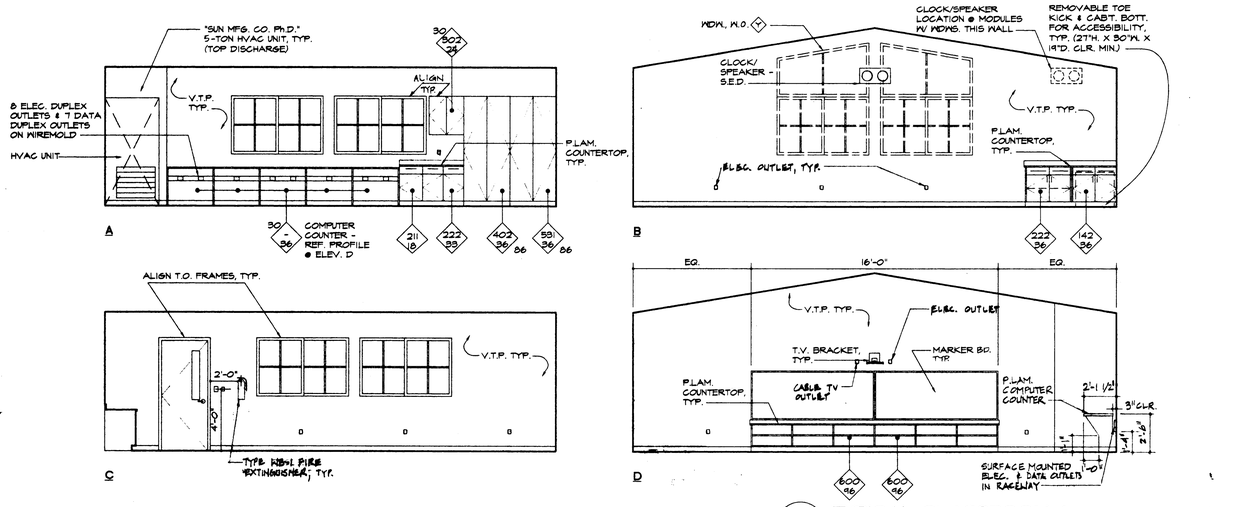

1 A5.5 TYPICAL CLASSROOM (BLDGS. B, C, D, E, F, G, H, & J)
SCALE: 1/4" = 1'-0"

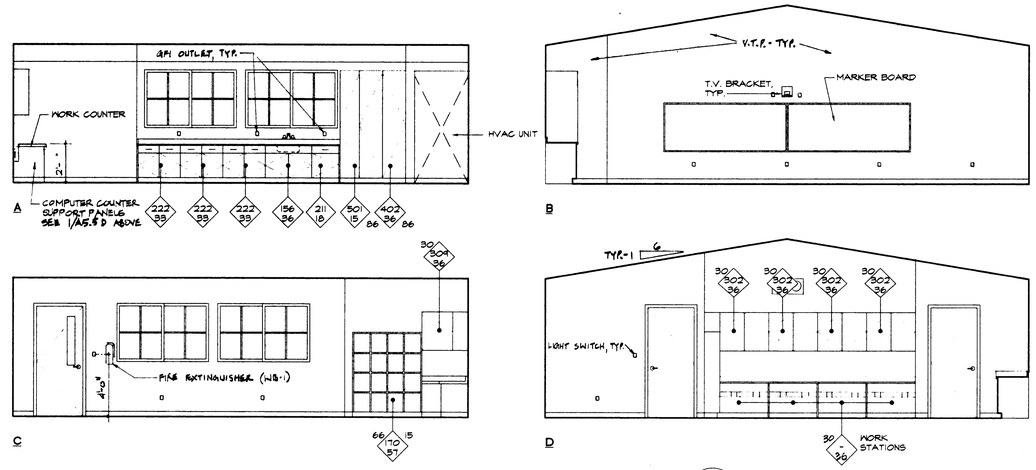

2 A5.5 SPECIAL DAY CLASSROOM
SCALE: 1/4" = 1'-0"

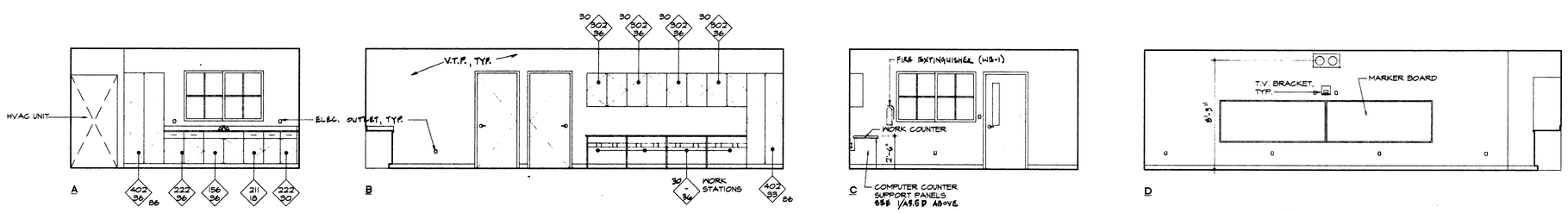

3 A5.5 RSP ROOM
SCALE: 1/4" = 1'-0"

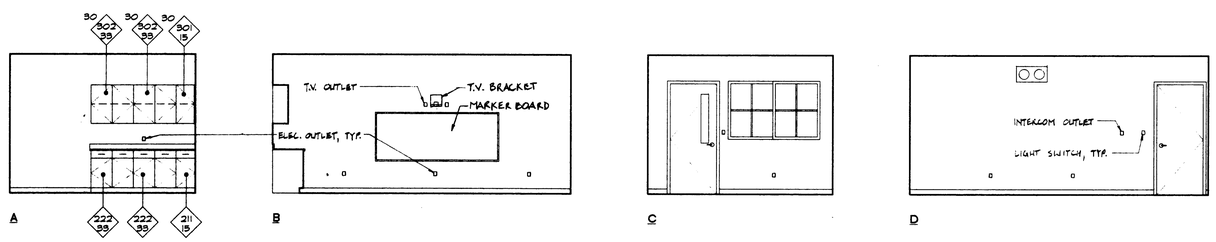

4 A5.5 SPEECH ROOM
SCALE: 1/4" = 1'-0"

HKA
Harlan Krusemark - Architect
4415 Cowell Road, Suite 230
Concord, CA 94521
Tel: 925.681.1905
Fax: 925.681.1906

LICENSED ARCHITECT HARLAN KRUSEMARK No. C23833 Exp. 9/30/01 STATE OF CALIFORNIA

Revisions	Date

HAWKINS SCHOOL (INCREMENT #2)

475 Darlene Lane
Tracy, CA 95377

Jefferson School District
7500 West Linne Road
Tracy, CA 95304

DSA FILE NO. 39-39
IDENTIFICATION STAMP
DIVISION OF THE STATE ARCHITECT
APPL 02 -102225
ACK FLS SS
DATE AUG 2 4 2000

Sheet Title:
BUILDINGS B, C, D, E, F, G, H, J:
TYP. CLASSROOM INTERIOR ELEVATIONS AND REFLECTED CEILING PLAN

Printing Date / Purpose:
8/18/00 - DSA APPROVAL

Scale: 1/4" = 1'-0"
Project Number: 9903.00
Sheet Number:

A5.5

of Sheets

FILE: 9910/A5.5

COPYRIGHT © 2000 HARLAN KRUSEMARK - ARCHITECT (HKA) THESE DRAWINGS ARE PROPRIETARY DOCUMENTS OF HKA AND ARE NOT TO BE DISTRIBUTED, PUBLISHED OR REPRODUCED WITHOUT WRITTEN PERMISSION OF HKA.

F:\9910-TracySchool\A5.5.dwg Sat Aug 19 13:41:14 2000

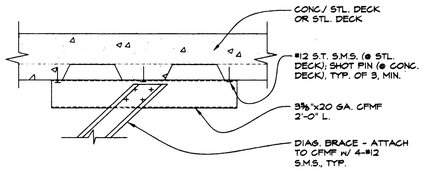

B DIAGONAL BRACE TOP ATTACHMENT
1 1/2" = 1'-0"

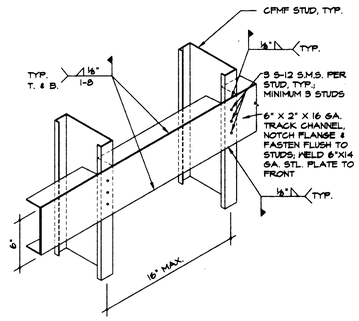

16 A9.4 HEAVY-DUTY BACKING PLATE FOR LOADS 101-250 LBS./L.F.
N.T.S.

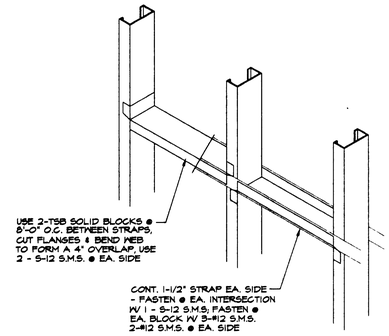

12 A9.4 BLOCKING DETAIL FOR STUDS
N.T.S.

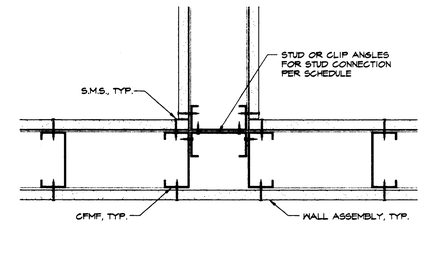

8 A9.4 WALL INTERSECTION FRAMING
N.T.S.

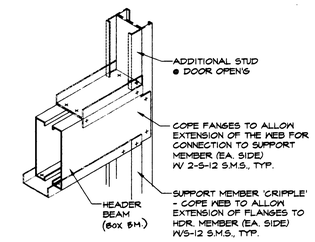

4 A9.4 HEADER (BOX BEAM) CONNECTIONS
N.T.S.

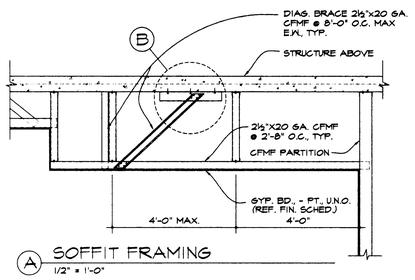

A SOFFIT FRAMING
1/2" = 1'-0"

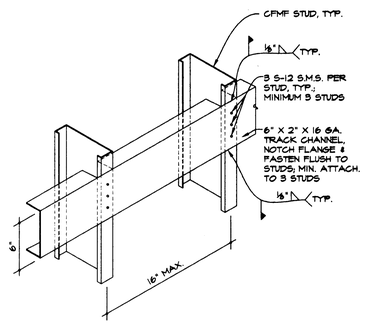

19 A9.4 TYPICAL CEILING FRAMING
SCALE AS SHOWN

15 A9.4 MEDIUM-DUTY BACKING PLATE FOR LOADS 51-100 LBS./L.F.
N.T.S.

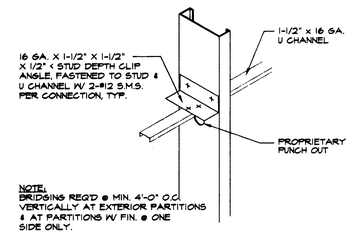

11 A9.4 BRIDGING DETAIL
N.T.S.

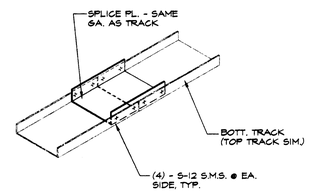

7 A9.4 TOP AND BOTTOM TRACK SPLICE
N.T.S.

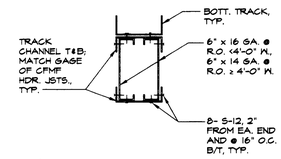

3 A9.4 TYP. HEADER (BOX BEAM) @ OPENING
1 1/2" = 1'-0"

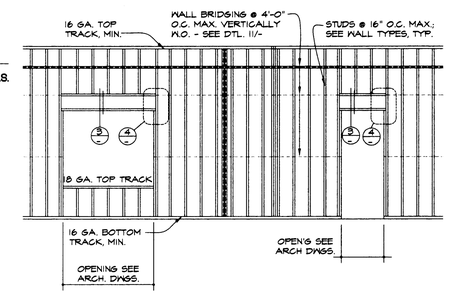

2 A9.4 TYP. CFMF PARTITION FRAMING
1/4" = 1'-0"

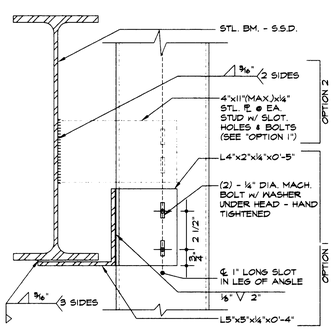

18 A9.4 DEFLECTION CLIP @ FULL-HT. STUDS
3" = 1'-0"

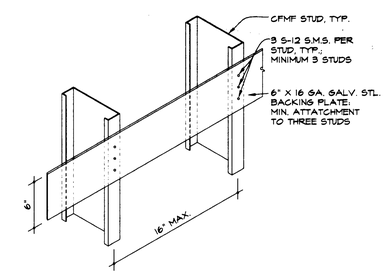

14 A9.4 LIGHT-DUTY BACKING PLATE FOR LOADS 1-50 LBS./L.F.
N.T.S.

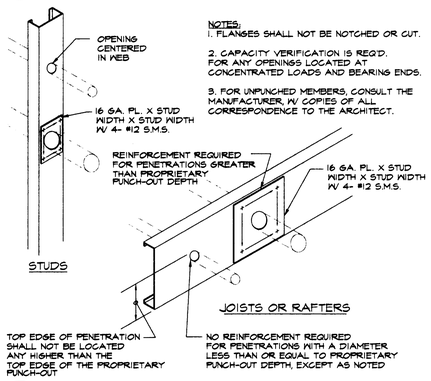

NOTES:
1. FLANGES SHALL NOT BE NOTCHED OR CUT.
2. CAPACITY VERIFICATION IS REQ'D. FOR ANY OPENINGS LOCATED AT CONCENTRATED LOADS AND BEARING ENDS.
3. FOR UNPUNCHED MEMBERS, CONSULT THE MANUFACTURER, W/ COPIES OF ALL CORRESPONDENCE TO THE ARCHITECT.

10 A9.4 JOIST, STUD, OR RAFTER WEB PENETRATIONS
N.T.S.

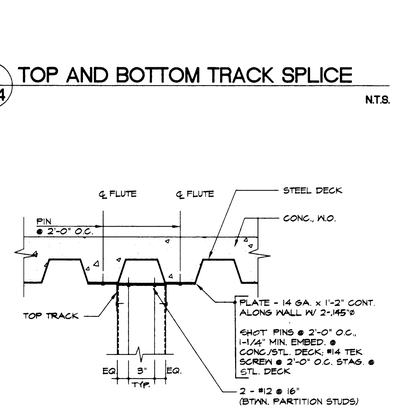

NOTE: PERPENDICULAR TO FLUTES SIM., NO PL. REQ'D. - INFILL VOIDS @ FLUTES W/ FIRESAFING WHERE FIRE-RESISTIVE CONST. IS REQ'D.

6 A9.4 TOP TRACK ATTACH. TO CONC./STL. DECK AND STL. DECK
1 1/2" = 1'-0"

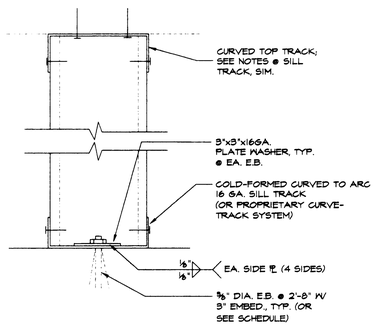

17 A9.4 CURVED TRACK
3" = 1'-0"

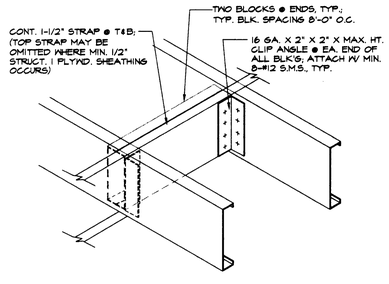

13 A9.4 BLOCKING DETAIL FOR JOISTS
N.T.S.

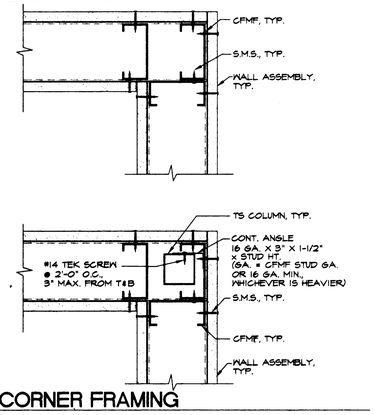

9 A9.4 CORNER FRAMING
N.T.S.

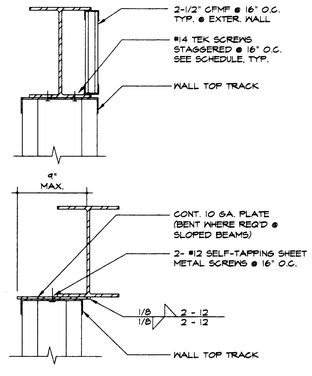

5 A9.4 WALL TOP TRACK ATTACH. TO STEEL BEAM - DIAG. BRACES SIM.
1 1/2" = 1'-0"

CONNECTING MEMBERS	SCREW	PIN	REMARKS
BOTTOM TRACK TO CONC. SLAB OR CURB		3/8"Ø A.B. @ 32" O.C. W/ 3" EMBED. OR .145" SHOT PIN w/ 1 1/4" MIN. EMBED. @ 32" O.C.*	2" FROM END OF WALL OR OPENING-2 MIN. PER TRACK
STUD TO BOTTOM TRACK OR TOP TRACK	#12 @ EA. FLANGE (5-12)		
TRACK TO STRUCT. STEEL MEMBER	2 - # 14 TEK SCREWS @ 16" O.C., TYP.	.145"Ø SHOT PIN @ 32" O.C. W/ 1/4" MIN. EMBED. TO STL. BM.	
BOT. TRACK TO CONC. @ CURVED PARTITION		3/8"Ø A.B. @ 32" O.C. W/ 3" EMBED. OR .145" SHOT PIN w/ 1 1/4" MIN. EMBED. @ 32" O.C.*	SEE DET. 17/-; SEE REMARK ABOVE
BUILT-UP STUD MEMBER	#12 @ 16" ON EA. OUT-STANDING FLANGE, U.N.O. (5-12)		SEE DET. 4/-
STUD TO STUD BACK/BACK	2 - #12 @ 24" (5-12)		
BRIDGING TO STUD	AS SHOWN		SEE DET. 11/-
TOP TRACK TO UNDERSIDE OF CONC/STL. DECKING		2 - .145"Ø @ 16" O.C. w/ 1 1/4" MIN. EMBED., STAGGERED	SEE DET. 6/-
TOP TRACK TO UNDERSIDE OF STL. DECKING	2 - #12 @ 12" O.C. TO LOW FLUTES		SEE DET. 6/-, SIM.
TOP TRACK TO ATTACHMENT PLATE OR STRUCT. BM.	2 - #12 @ 16" O.C. @ FL., #14 TEK SCREW @ 16"O.C. @ STRUCT. BM.	.145"Ø SHOT PIN @ 32" O.C. w/ 1/4" MIN. EMBED. TO STL. BM.	SEE DET. 5/-

* NO SHOT PINS @ CURBS, NOR @ EXTERIOR PARTITIONS, NOR W/IN 6" OF SLAB EDGE; 1 1/4" MIN. EMBED. W/ HVY. DUTY SHOT PINS, TYP.

1 A9.4 FRAME FASTENING SCHEDULE TYP. CFMF PARTITION

HKA
Harlan Krusemark - Architect
4415 Cowell Road, Suite 230
Concord, CA 94521
Tel: 925.681.1905
Fax: 925.681.1906

LICENSED ARCHITECT HARLAN KRUSEMARK No. C23803 Exp. 9/30/01 STATE OF CALIFORNIA

Revisions	Date

HAWKINS SCHOOL (INCREMENT #1)

475 Darlene Lane
Tracy, CA 95377

Jefferson School District
7500 West Linne Road
Tracy, CA 95304

DSA FILE NO. 39-39
IDENTIFICATION STAMP
DIVISION OF THE STATE ARCHITECT
APPL 02 -102225
AC PLS 02 SS
DATE AUG 2 4 2000

Sheet Title:
FRAMING DETAILS

Printing Date / Purpose:
8/18/00 - DSA APPROVAL

Scale: AS NOTED
Project Number: 9903.00
Sheet Number:
A9.4
of Sheets

FILE: 9910/A9.4

COPYRIGHT © 2000 HARLAN KRUSEMARK - ARCHITECT (HKA) THESE DRAWINGS ARE PROPRIETARY DOCUMENTS OF HKA AND ARE NOT TO BE DISTRIBUTED, PUBLISHED OR REPRODUCED WITHOUT WRITTEN PERMISSION OF HKA.

PAINT FINISH SCHEDULE

(REFER TO SPECIFICATION SECTION 09900-PAINTING)

FINISH	LOCATION (NOT INTENDED TO BE A COMPLETE LIST)
W-1	ELECTRICAL ROOM PLYWOOD PANEL BOARDS
W-2	INTERIOR WOOD TRIM & WOOD DOORS
W-6	WD. BASE, TRIM, & BLEACHERS @ BLDG.M, MAPLE INTERIOR ARCHITECTURAL WOODWORK, & MAPLE STAIR WORK
DW-1	GYPSUM BOARD (TYP., U.N.O.) DW-2 @ KITCHEN SUITE, ALL TOILET RMS., SPEEDLINE & JANITORS' CLOSETS.
CB-1	INTERIOR EXPOSED CONCRETE FLOORS
M-3	INT. MTL. DOORS & FRAMES, INT. ARCH-EXPOSED STL.
ECB-1	EXTERIOR EXPOSED CONCRETE
EM-5	EXT. ARCHITECTURALLY EXPOSED STEEL

GENERAL PAINTING NOTES:

1. COLORS SHALL BE SELECTED BY THE ARCHITECT. UNLESS SPECIFICALLY NOTED OTHERWISE, COLORS SHALL NOT BE CHANGED WITHIN A SURFACE PLANE. AIR DUCTS EXPOSED IN FINISHED AREAS SHALL BE PAINTED DEEP ACCENT COLORS AS SELECTED. ALL OTHER INTERIOR PIPING, CONDUIT, AND GRILLES SHALL BE PAINTED TO MATCH COLOR OF ADJACENT SURFACES.

2. ARCHITECTURALLY EXPOSED STEEL (AES) IS STRUCTURAL STEEL, PIPES MISCELLANEOUS METAL, HANDRAILS AND GUARDRAILS, AND SHEET METAL THAT IS EXPOSED TO VIEW FROM ANYWHERE WITHIN THE LIMITS OF THE SITE OR FROM ANY HABITABLE FLOOR. THIS WORK SHALL RECEIVE FINISH SYSTEM EM-5 @ EXT. & M-3 @ INT. , AND ALL ASSOCIATED PREPARATION AND PRIMING AS RECOMMENDED BY THE PAINT MANUFACTURER. AES SPECIFICALLY INCLUDES, BUT IS NOT NECESSARILY LIMITED TO: 1) EXTERIOR AND INTERIOR EXPOSED COLUMNS, BMS, TRUSSES, CROSS-BRACING, AND ALL TRELLISES AND SUPPORTING MEMBERS; 2) EXPOSED BRACKETS AND BRACING FOR EXPOSED MECHANICAL, PLUMBING AND ELECTRICAL WORK AND MECHANICAL, PLUMBING AND ELECTRICAL WORK WHERE EXPOSED IN THE FINISHED WORK; 3) SHEET METAL COPINGS, FASCIAE, SCUPPERS, CONDUCTOR HEADS, GUTTERS AND EXPOSED PIPE RAINWATER LEADERS AND DOWNSPOUTS.

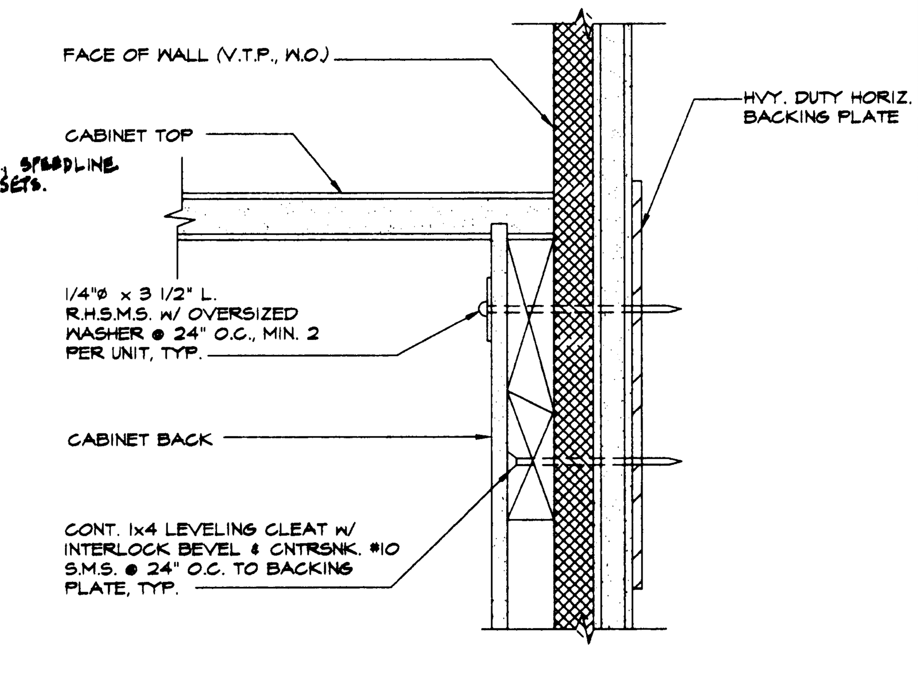

4 / A9.5 WALL CAB'T ANCHORAGE @ TOP 6" = 1'-0"

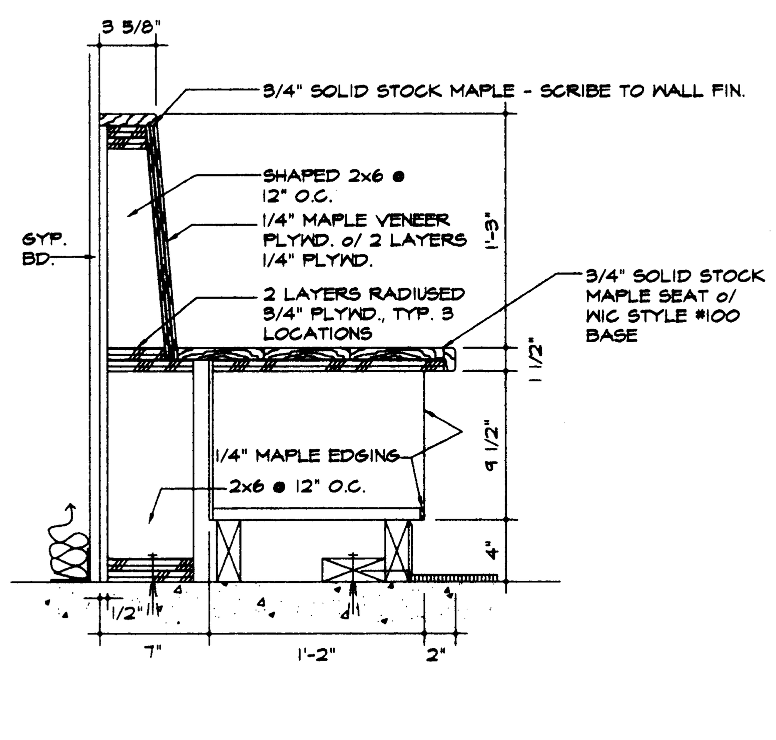

7 / A9.5 LIBRARY WINDOW READING BENCH 1 1/2" = 1'-0"

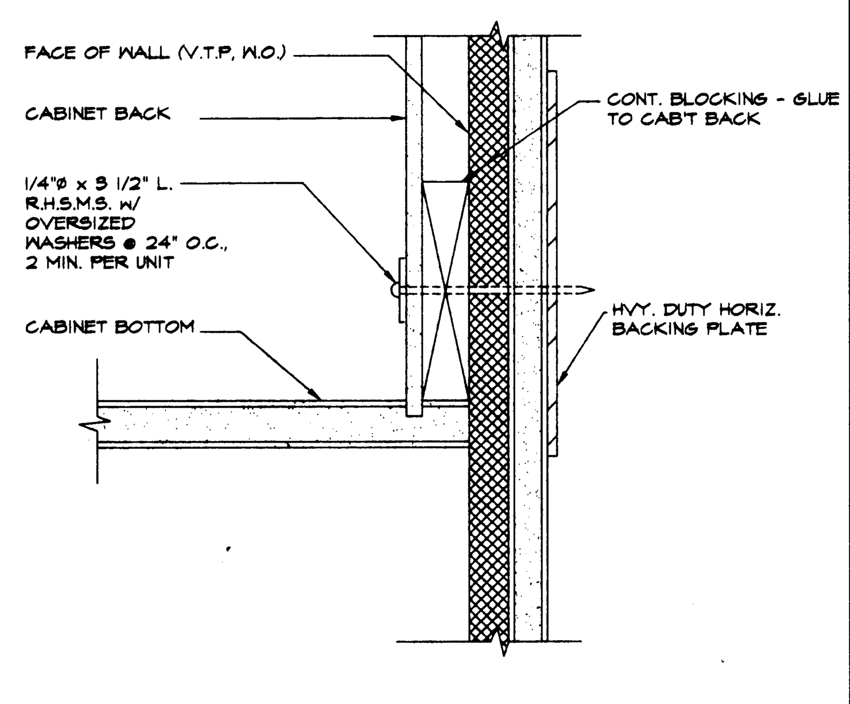

3 / A9.5 WALL CAB'T ANCHORAGE @ BOTTOM 6" = 1'-0"

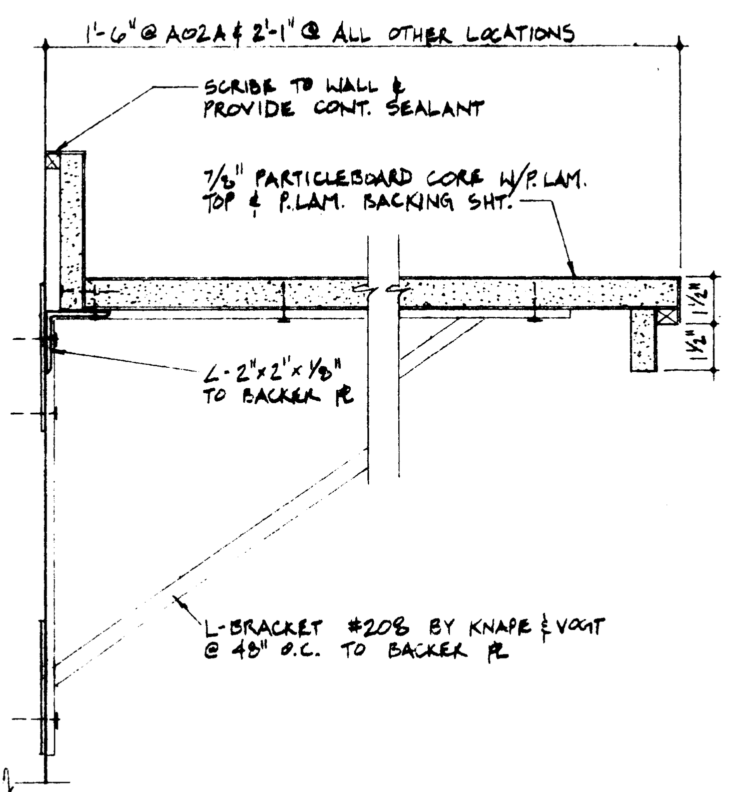

9 / A9.5 FREESTANDING COUNTERTOP 3" = 1'-0"

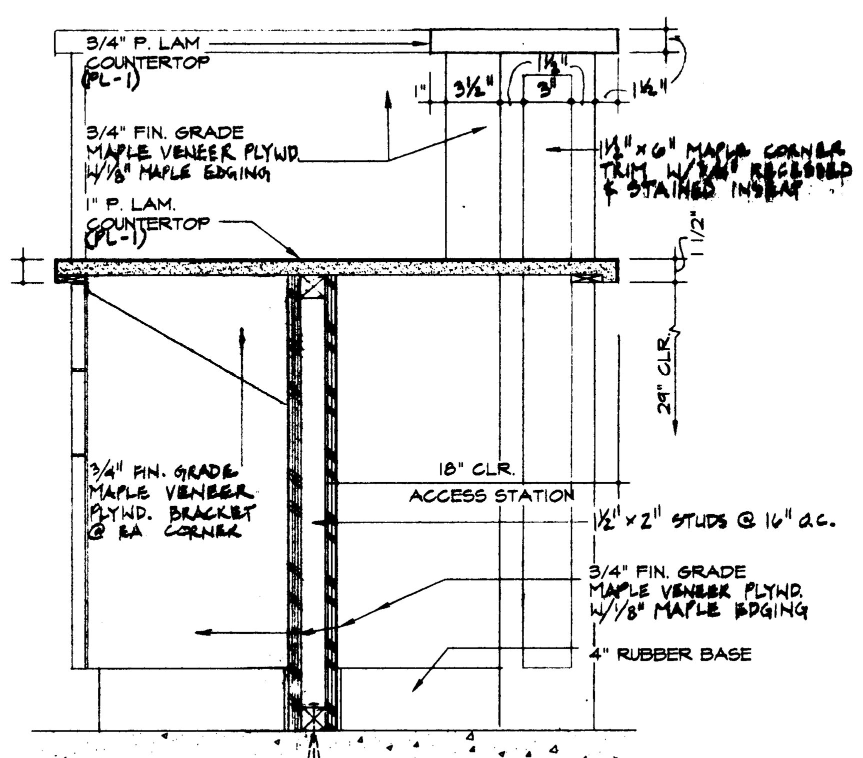

6 / A9.5 RECEPTION DESK ACCESS STATION 1 1/2" = 1'-0"

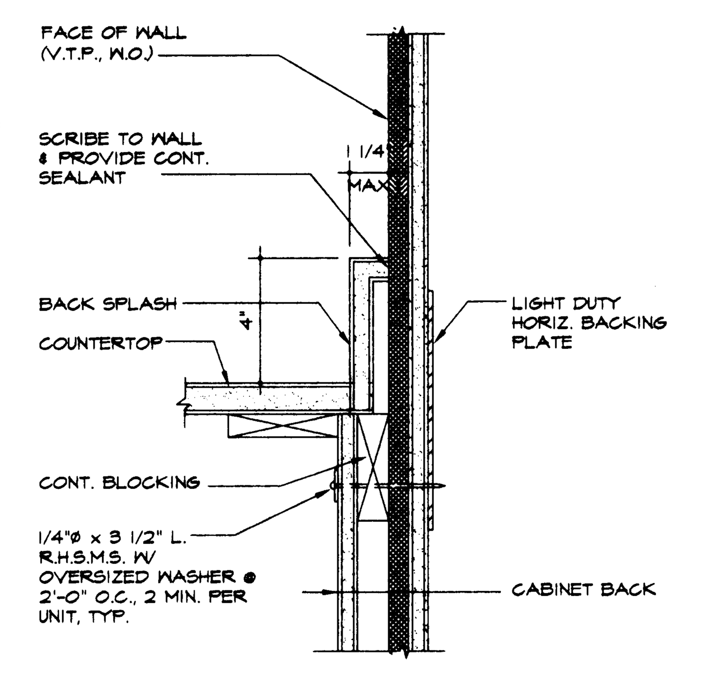

2 / A9.5 TYP. BASE CAB'T CONNECTION TO WALL 3" = 1'-0"

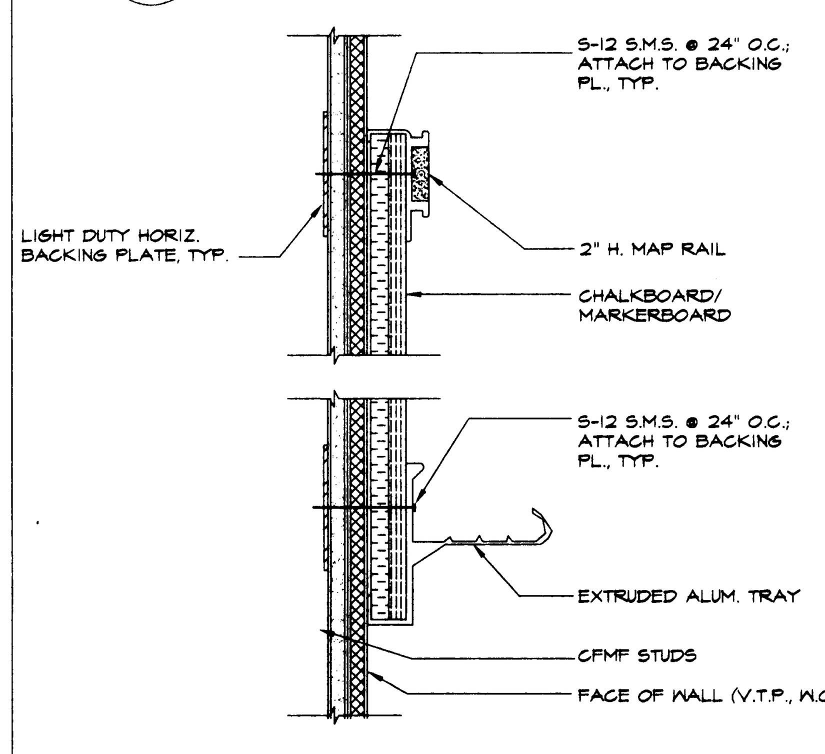

8 / A9.5 CHALKBOARD/MARKERBOARD MOUNTING 3" = 1'-0"

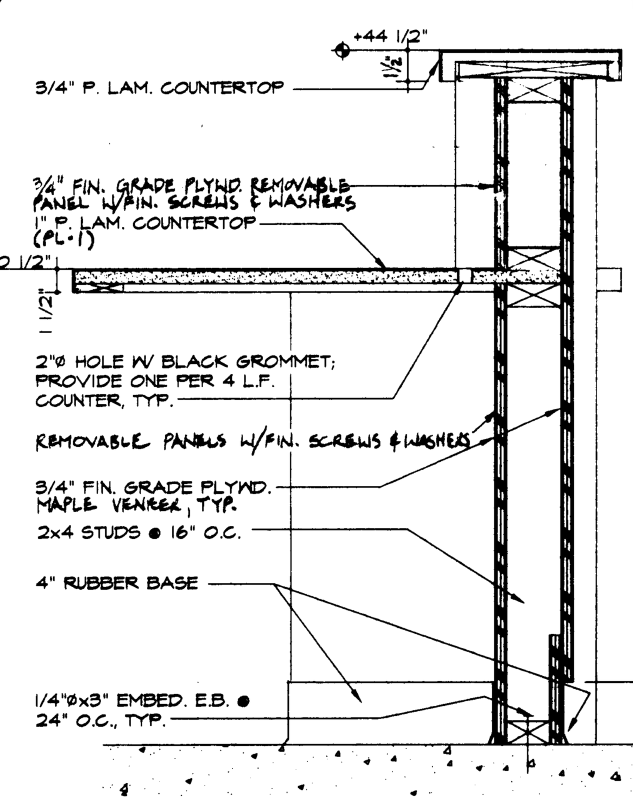

5 / A9.5 RECEPTION DESK 1 1/2" = 1'-0"

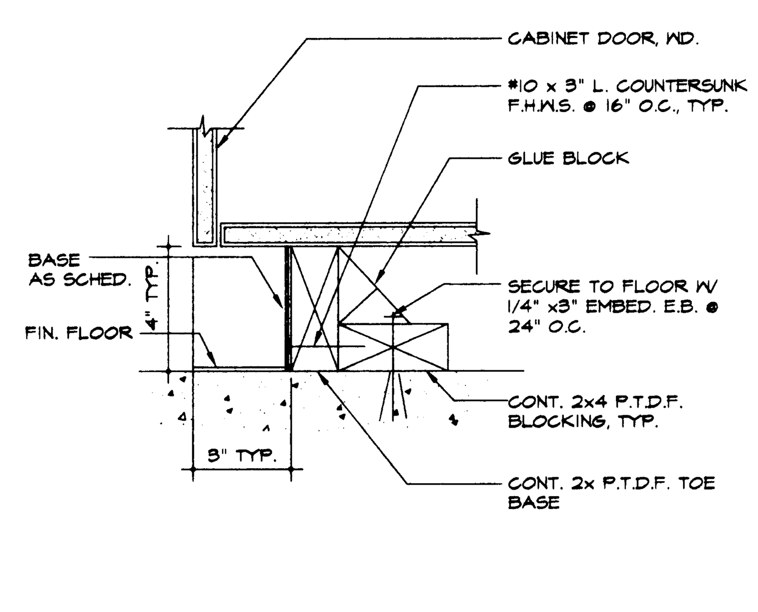

1 / A9.5 FIXED BASE ANCHOR DETAIL 3" = 1'-0"

SERIES 100 BASE CABINET DESIGNS

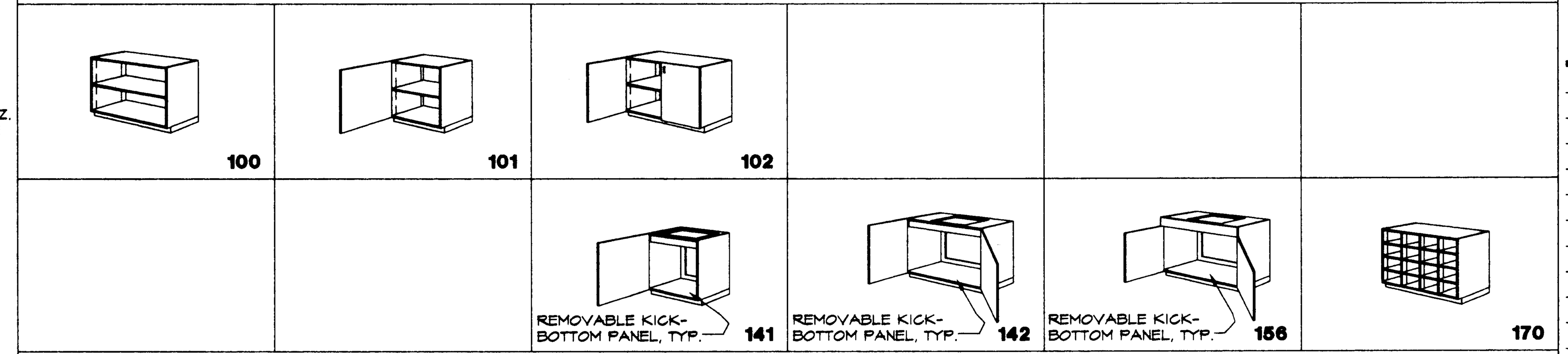

SERIES 200 DRAWER BASE CABINET DESIGNS

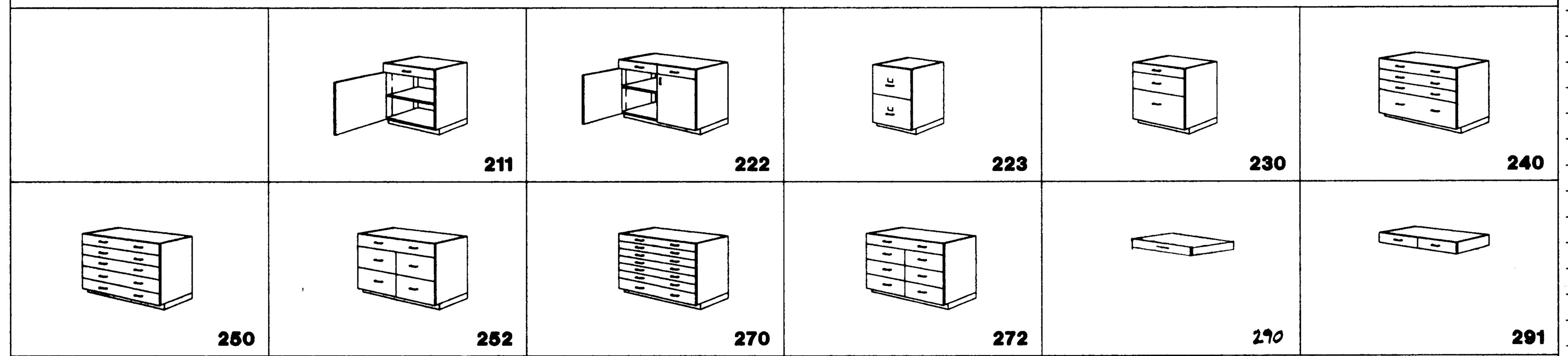

SERIES 300 WALL HUNG CABINET DESIGNS

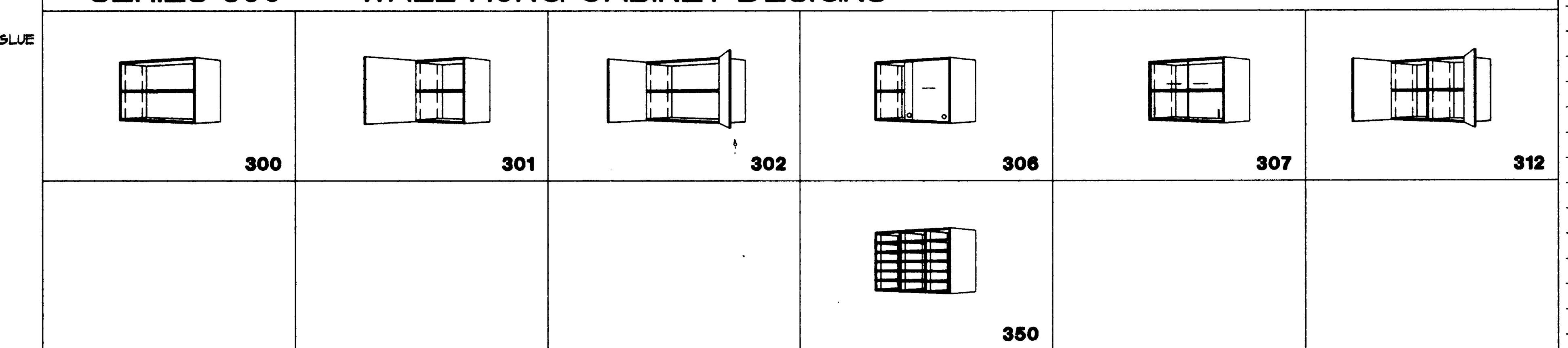

SERIES 400 TALL STORAGE CABINET DESIGNS

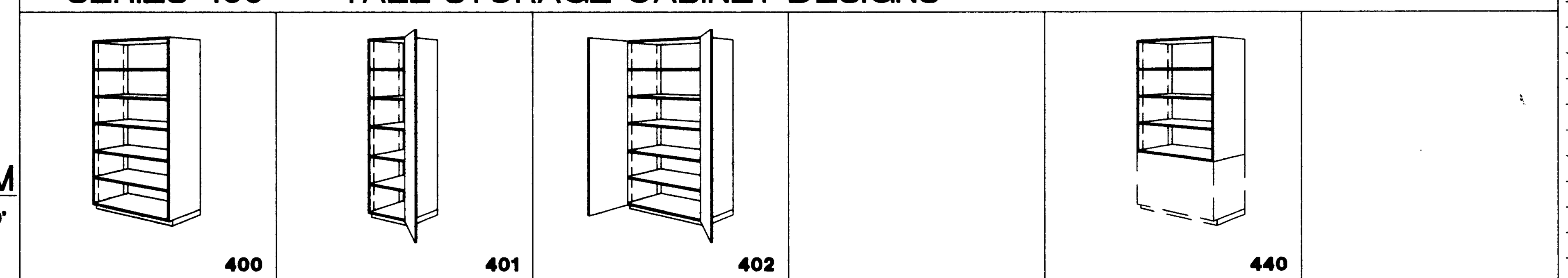

SERIES 500 WARDROBE CABINET DESIGNS

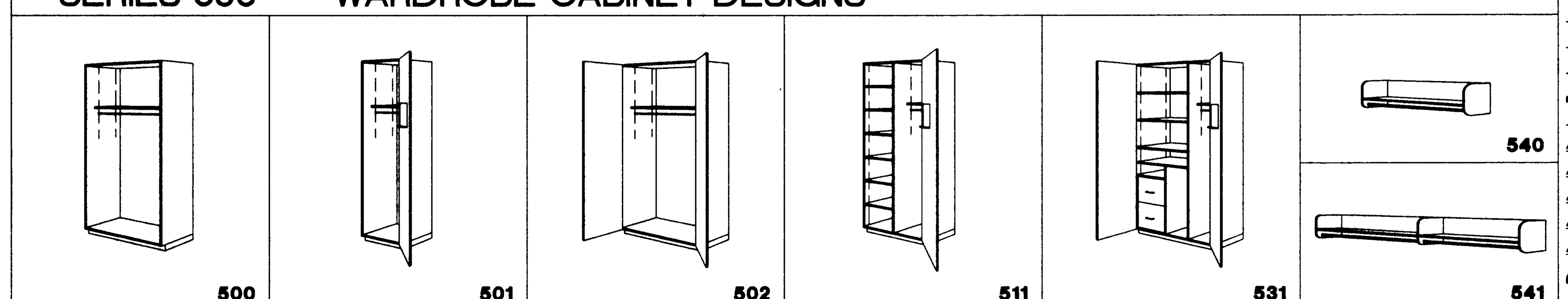

SERIES 600 LIBRARY CABINET DESIGNS

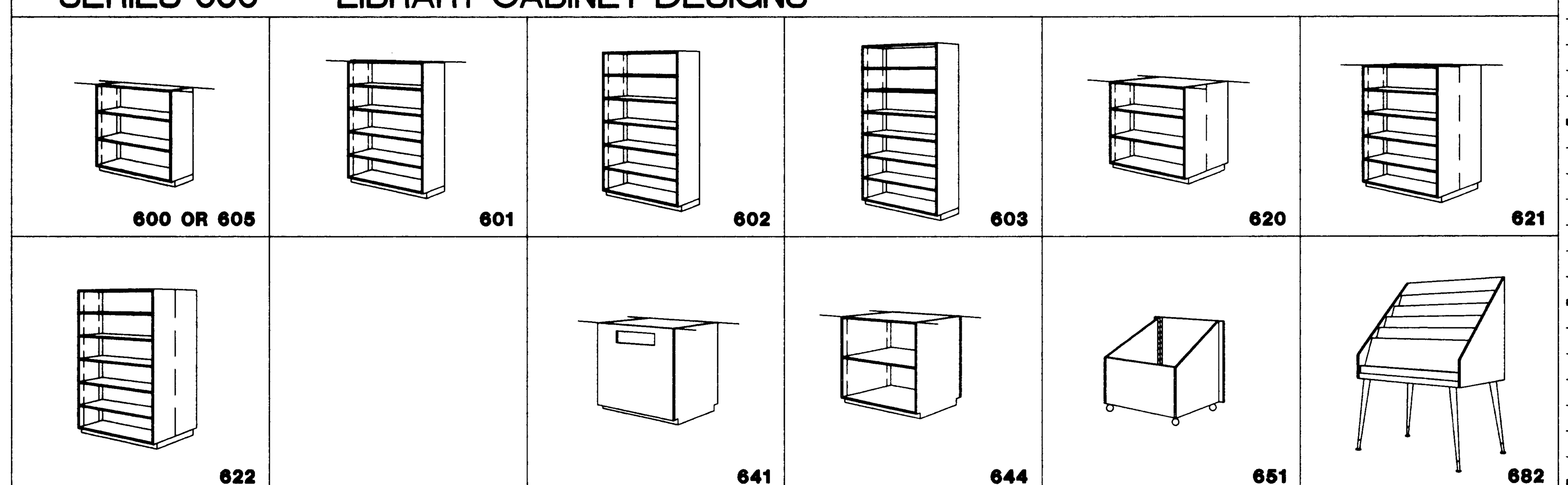

GENERAL NOTES

1. STANDARD WIDTH AND LENGTH SCHEDULE (TYPICAL UNLESS INDICATED OTHERWISE):

SERIES 100 & 200 BASE CABINETS:	HEIGHT = 34, DEPTH = 24
SERIES 300 WALL-HUNG CABINETS:	HEIGHT = 36, DEPTH = 12
SERIES 400 TALL CABINETS:	HEIGHT = 88, DEPTH = 24 (86 @ INCR. #2)
SERIES 500 WARDROBE CABINETS:	HEIGHT = 88, DEPTH = 24 (86 @ INCR. #2)
SERIES 600 LIBRARY CABINETS:	HEIGHT = 88, DEPTH = 12 (86 @ INCR. #2)

2. ALL CASEWORK SHALL BE IN ACCORDANCE WITH W.I.C. STANDARDS CUSTOM GRADE.
3. HEIGHTS OF CASEWORK ARE TO FINISHED TOPS UNLESS INDICATED OTHERWISE.
4. ALL CASEWORK DIMENSIONS ARE NOMINAL OUTSIDE DIMENSIONS. (EXCEPTION: CABINETS ADJACENT TO WALLS MAY BE INCREASED IN LENGTH TO ELIMINATE THE NEED FOR FILLER STRIPS IF ACCEPTED BY ARCHITECT DURING SUBMITTAL PROCESS).
5. FINISH ALL EXPOSED AND SEMI-EXPOSED PORTIONS OF CASEWORK AND COUNTERTOPS WIT PLASTIC LAMINATE, UNLESS SPECIFICALLY INDICATED OTHERWISE.
6. ALL CABINET BASES FOR FLOOR MOUNTED CABINETS SHALL BE 4" UNLESS INDICATED OTHERWISE.
7. PROVIDE FINISH BASE MATERIAL (PER FINISH SCHEDULE) ON ALL FLOOR-MOUNTED CABINETS.
8. ALL SHELVING SHALL BE ADJUSTABLE UNLESS INDICATED OTHERWISE.
9. PROVIDE 4" HIGH BACKSPLASH AT ALL COUNTERTOPS UNLESS INDICATED OTHERWISE.
10. SERIES 300 WALL HUNG CABINETS: 18"H. OR LESS SHALL INCLUDE ONE ADJUSTABLE SHELF EA., 19" TO 30"H. SHALL INCLUDE TWO ADJUSTABLE SHELVES, 31" TO 42"H. SHALL INCLUDE THREE ADJUSTABLE SHELVES EACH. GREATER THAN 42"H. - INCLUDE 4 ADJ. SHELVES
11. PROVIDE LOCKS AT EACH DOOR OR PAIR OF DOORS AND EACH DRAWER, UNLESS INDICATED OTHERWISE.
12. ALL COUNTERTOPS SHALL BE 24" DEEP WITH TOPS AT 34" A.F.F., UNLESS INDICATED OTHERWISE.
13. PROVIDE REMOVABLE TOE KICK/CABINET BOTTOM AT ALL BASE CABINETS WITH SINKS OR LAVITORIES (CLR. SPACE SHALL BE MIN. 27"H. x 30"W. x 19"D.).

LEGEND

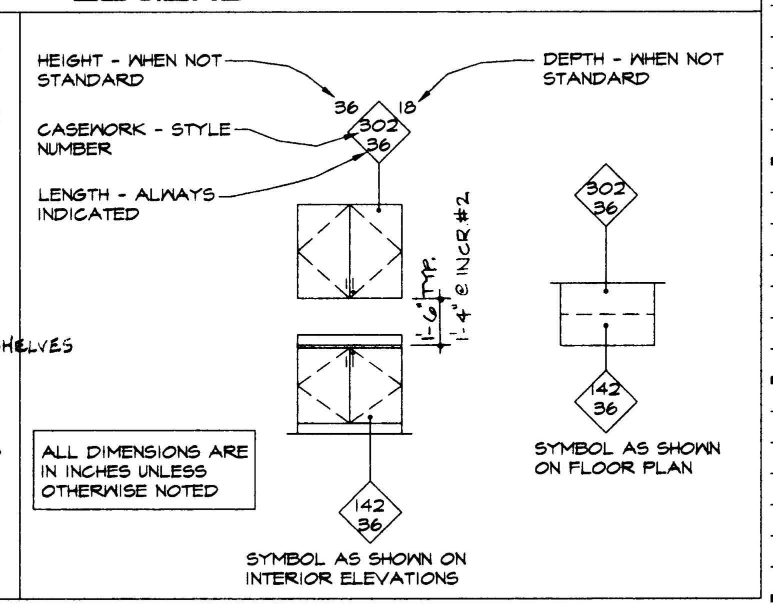

ALL DIMENSIONS ARE IN INCHES UNLESS OTHERWISE NOTED

HKA
Harlan Krusemark - Architect
4415 Cowell Road, Suite 230
Concord, CA 94521
Tel: 925.681.1905
Fax: 925.681.1906

Revisions	Date
△	
△	
△	
△	
△	
△	

HAWKINS SCHOOL
(INCREMENTS #1 & #2)

475 Darlene Lane
Tracy, CA 95377

Jefferson School District
7500 West Linne Road
Tracy, CA 95304

DSA FILE NO. 39-39
IDENTIFICATION STAMP
DIVISION OF THE STATE ARCHITECT
APPL 02 -102225
AC ___ FLS ___ SS ___
DATE AUG 2 4 2000

Sheet Title:
CASEWORK, INTERIOR DETAILS,
PAINT FINISH SCHEDULE

Printing Date / Purpose:
8/18/00 - DSA APPROVAL

Scale: As Noted
Project Number: 9903.00
Sheet Number:

A9.5

of Sheets

FILE: 9910/A9.5

COPYRIGHT © 2000 HARLAN KRUSEMARK - ARCHITECT (HKA) THESE DRAWINGS ARE PROPRIETARY DOCUMENTS OF HKA AND ARE NOT TO BE DISTRIBUTED, PUBLISHED OR REPRODUCED WITHOUT WRITTEN PERMISSION OF HKA.

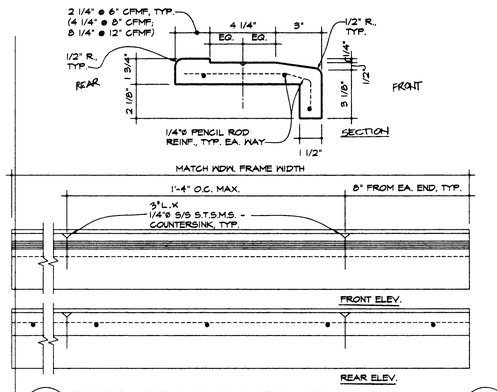

19 / A9.6 PRECAST CONC. WDW. SILL

3" = 1'-0"

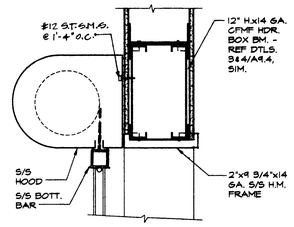

16 / A9.6 OVERHEAD COILING DOOR HEAD

1 1/2" = 1'-0"

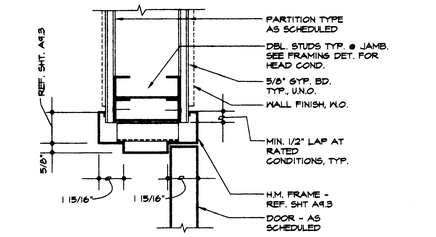

12 / A9.6 INTR. H.M. DR. FRAME JAMB (HD. SIM.)

3" = 1'-0"

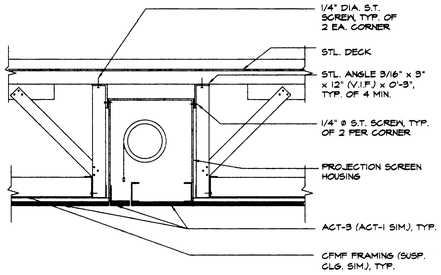

8 / A9.6 PROJECTION SCREEN DETAIL

N.T.S.

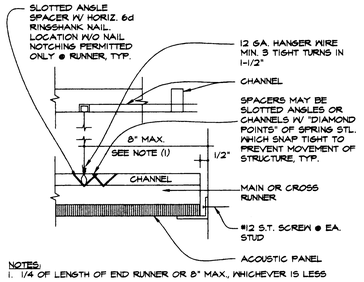

NOTES:
1. 1/4 OF LENGTH OF END RUNNER OR 8" MAX., WHICHEVER IS LESS
2. SLIP JT. ATTACH. REQ'D. @ TWO ADJ. PARTITIONS

4 / A9.6 SUSPENDED CEILING PERIMETER - SLIP JOINT

N.T.S.

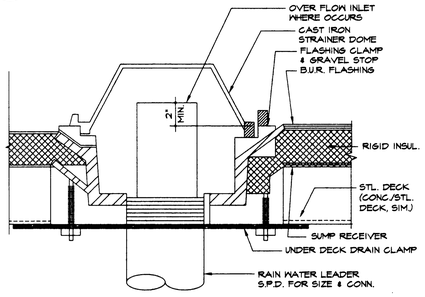

18 / A9.6 ROOF DRAIN AND OVERFLOW DRAIN

3" = 1'-0"

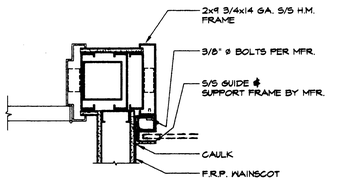

15 / A9.6 OVERHEAD COILING DOOR JAMB

1 1/2" = 1'-0"

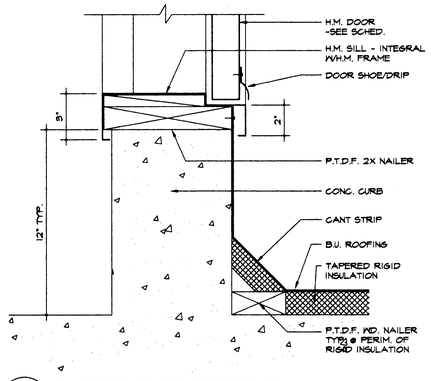

11 / A9.6 RAISED CURB DOOR SILL

3" = 1'-0"

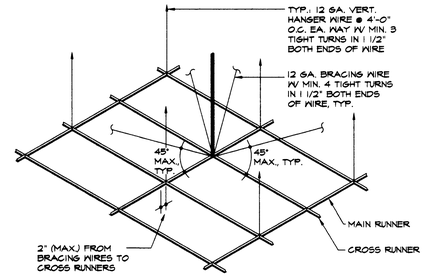

7 / A9.6 SUSPENDED ACOUSTICAL CEILING BRACING

N.T.S.

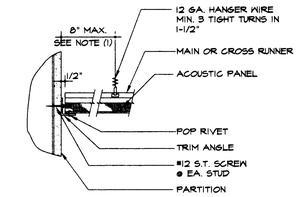

NOTES:
1. 1/4 OF LENGTH OF END RUNNER OR 8" MAX., WHICHEVER IS LESS
2. FIXED ATTACH. REQ'D. @ TWO ADJ. PARTITIONS

3 / A9.6 SUSPENDED CEILING PERIMETER - FIXED

N.T.S.

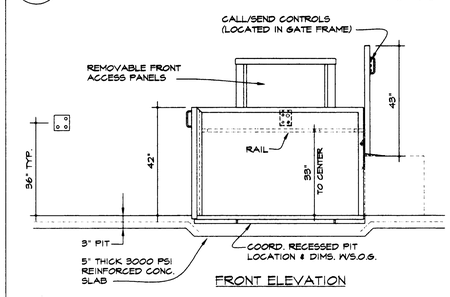

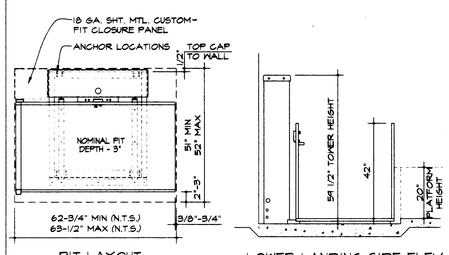

17 / A9.6 WHEELCHAIR LIFT DETAILS

1/2" = 1'-0"

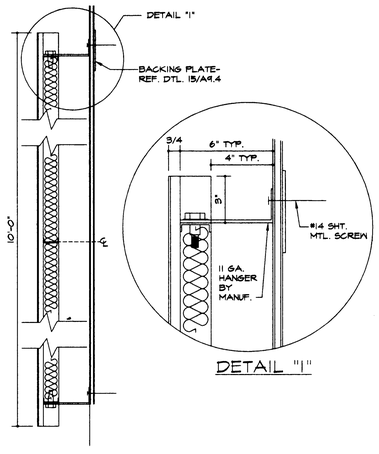

14 / A9.6 ACOUSTICAL WALL PANEL

N.T.S.

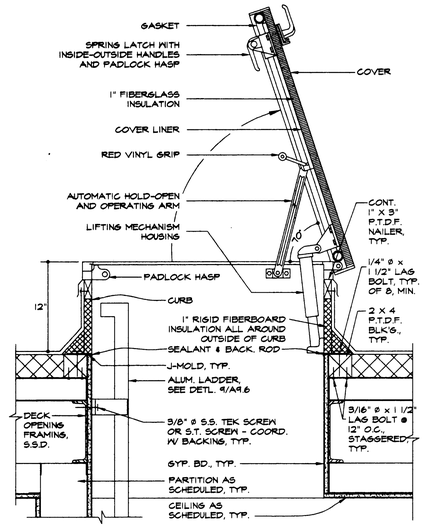

10 / A9.6 ROOF SCUTTLE (HATCH)

N.T.S.

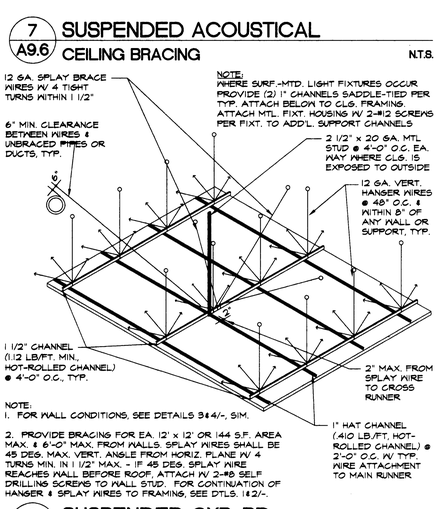

NOTE:
1. FOR WALL CONDITIONS, SEE DETAILS 3&4/-, SIM.
2. PROVIDE BRACING FOR EA. 12' x 12' OR 144 S.F. AREA MAX. & 6'-0" MAX. FROM WALLS. SPLAY WIRES SHALL BE 45 DEG. MAX. VERT. ANGLE FROM HORIZ. PLANE W/ 4 TURNS MIN. IN 1 1/2" MAX. - IF 45 DEG. SPLAY WIRE REACHES WALL BEFORE ROOF, ATTACH W/ 2-#8 SELF DRILLING SCREWS TO WALL STUD. FOR CONTINUATION OF HANGER & SPLAY WIRES TO FRAMING, SEE DTLS. 1&2/-.

6 / A9.6 SUSPENDED GYP. BD. CEILING BRACING

N.T.S.

2 / A9.6 SPLAYED SEISMIC WIRE ATTACH. @ STL. DECK (W/ CONC. FILL, W.O.)

N.T.S.

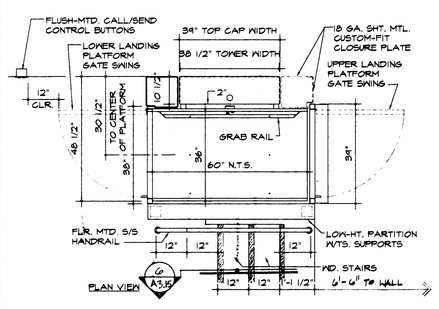

17 / A9.6 WHEELCHAIR LIFT DETAILS

1/2" = 1'-0"

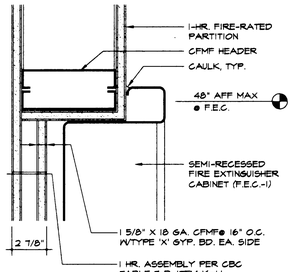

13 / A9.6 F.E.C. @ FIRE-RATED PARTITION (OTHER RECESSED ITEMS, SIM.)

3" = 1'-0"

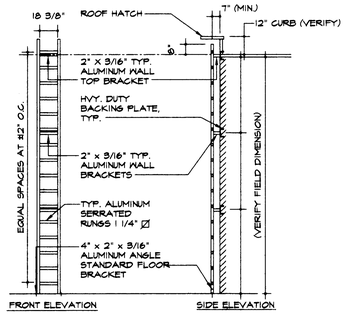

9 / A9.6 ROOF ACCESS LADDER

1/4" = 1'-0"

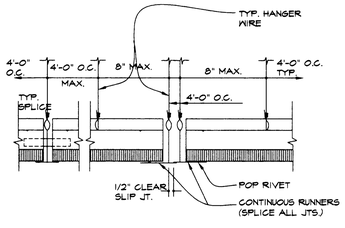

5 / A9.6 SUSPENDED CEILING - SLIP JOINT

N.T.S.

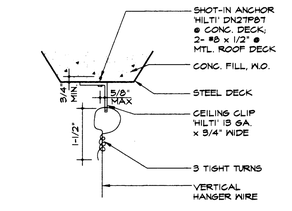

1 / A9.6 VERTICAL HANGER WIRE ATTACH. @ STL. DECK (W/ CONC. FILL, W.O.)

N.T.S.

HKA

Harlan Krusemark - Architect
4415 Cowell Road, Suite 230
Concord, CA 94521
Tel: 925.681.1905
Fax: 925.681.1906

LICENSED ARCHITECT HARLAN KRUSEMARK No. C23833 Exp. 9/30/8 STATE OF CALIFORNIA

Revisions	Date

HAWKINS SCHOOL (INCREMENT #1)

475 Darlene Lane
Tracy, CA 95377

Jefferson School District
7500 West Linne Road
Tracy, CA 95304

DSA FILE NO. 39-39
IDENTIFICATION STAMP
DIVISION OF THE STATE ARCHITECT
APPL 02 -102225
AC FLS SS
DATE AUG 2 4 2:00

Sheet Title:
CEILING DETAILS, MISCELLANEOUS DETAILS

Printing Date / Purpose:
8/18/00 - DSA APPROVAL

Scale: AS NOTED
Project Number: 9903.00
Sheet Number:

A9.6

of Sheets

FILE: 9910/A9.6

COPYRIGHT © 2000 HARLAN KRUSEMARK - ARCHITECT (HKA) THESE DRAWINGS ARE PROPRIETARY DOCUMENTS OF HKA AND ARE NOT TO BE DISTRIBUTED, PUBLISHED OR REPRODUCED WITHOUT WRITTEN PERMISSION OF HKA.

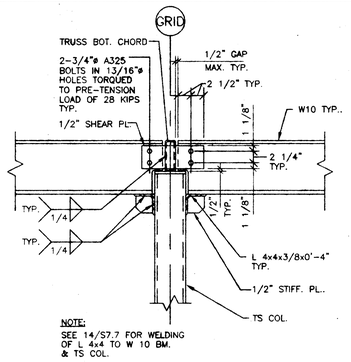

1 TRUSS-EAVE BM. CONN. DETAIL
1" = 1'-0"

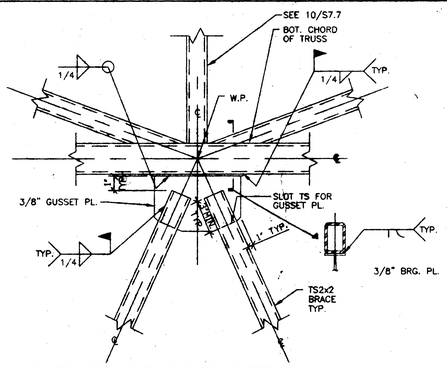

2 TRUSS-TS BRACE CONN. DETAIL
1" = 1'-0"

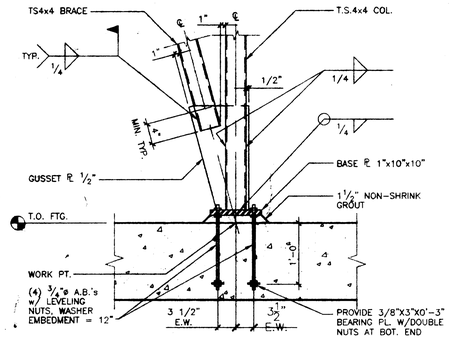

3 TS BRACE - TS COLUMN CONNECTION DETAIL
1" = 1'-0"

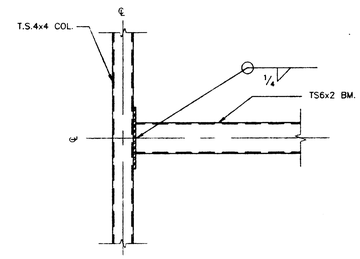

4 TS BRACE - TS COLUMN CONNECTION DETAIL
1" = 1'-0"

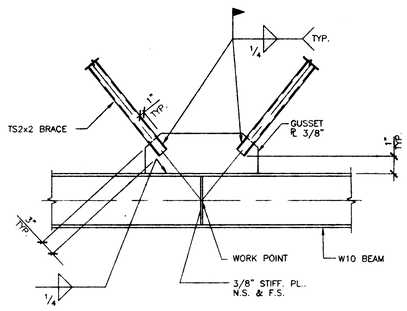

5 TS BRACE - TS BEAM CONNECTION DETAIL
1" = 1'-0"

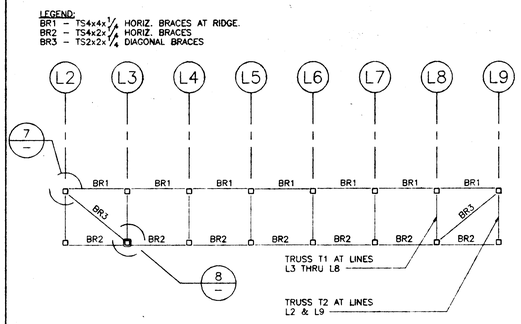

6 TRUSS BRACING AT LINE LD
1/8" = 1'-0"

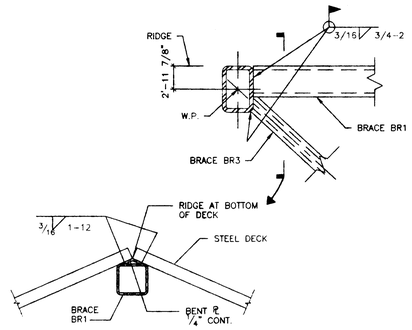

7 BRACE AT TOP CHORD
1 1/2" = 1'-0"

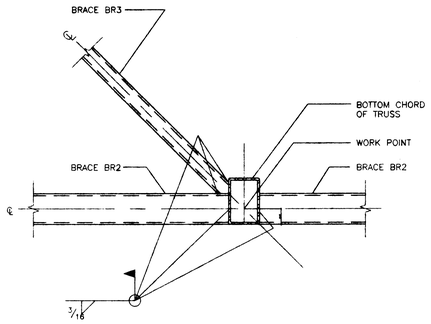

8 BRACE AT BOTTOM CHORD
1 1/2" = 1'-0"

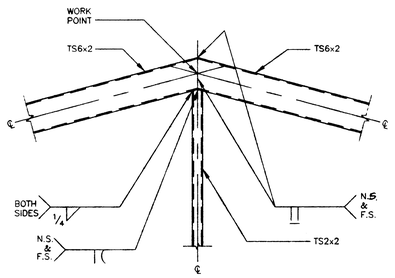

9 TOP CHORD AT MIDSPAN
1" = 1'-0"

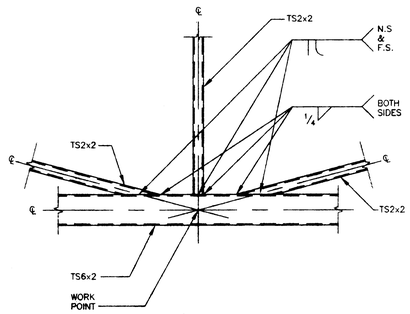

10 BOTTOM CHORD AT MIDSPAN
1" = 1'-0"

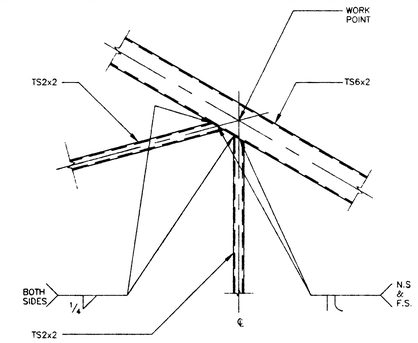

11 TOP CHORD AT 1/4 PTS.
1" = 1'-0"

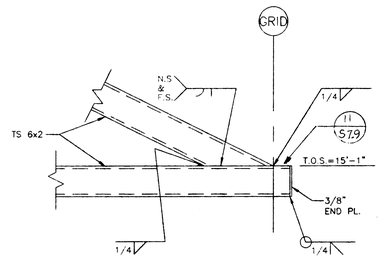

12 SECTION
1" = 1'-0"

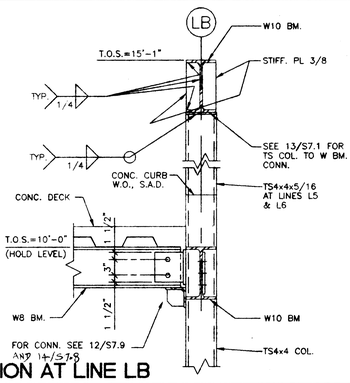

13 SECTION AT LINE LB
1" = 1'-0"

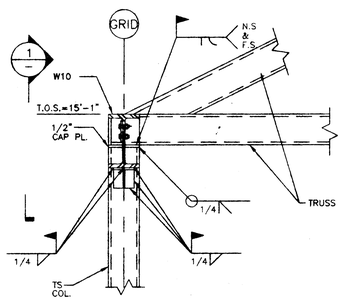

14 SECTION
1" = 1'-0"

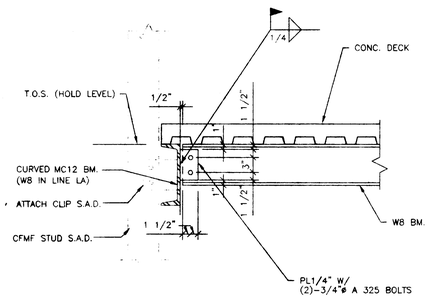

15 SECTION AT SEMI-CIRCULAR WING
1" = 1'-0"

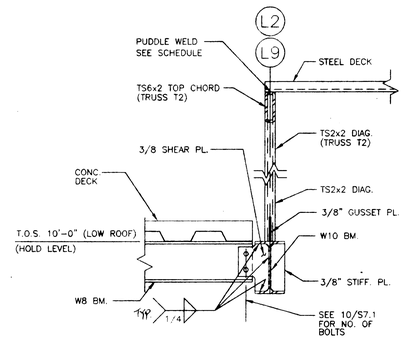

16 SECTION AT LINES L2 AND L9
1" = 1'-0"

HKA
Harlan Krusemark - Architect
4415 Cowell Road, Suite 230
Concord, CA 94521
Tel: 925.681.1905
Fax: 925.681.1906

MFT Consulting Engineers Inc.
120 Howard Street, Suite 425
San Francisco, CA 94105
(415) 227-0100

Revisions | Date

HAWKINS SCHOOL

475 Darlene Lane
Tracy, CA 95377

Jefferson School District
7500 West Linne Road
Tracy, CA 95304

DSA FILE NO. 39-38
IDENTIFICATION STAMP
DIVISION OF THE STATE ARCHITECT
APPL 02 -102225
AC
DATE

Sheet Title:
BUILDING L: LIBRARY
STEEL DETAILS AND SECTIONS

Printing Date / Purpose:
08/18/00 DSA APPROVAL

Scale: AS SHOWN
Project Number: 99646.00
Sheet Number:

S7.7

of Sheets

FILE: 99646-51

COPYRIGHT © 2000 HARLAN KRUSEMARK - ARCHITECT (HKA) THESE DRAWINGS ARE PROPRIETARY DOCUMENTS OF HKA AND ARE NOT TO BE DISTRIBUTED, PUBLISHED OR REPRODUCED WITHOUT WRITTEN PERMISSION OF HKA.

H:\PROJECTS\Hawkins\DWGS\08-18-00\SA BKCK\99646-7Ta.dwg Sun Aug 20 15:41:31 2000

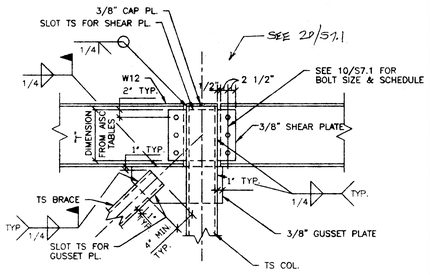

1 TYP. BRACE TO TS COL. CONN.
1"=1'-0"

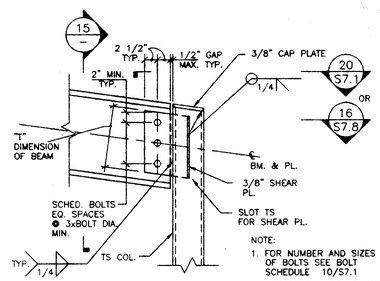

2 DETAIL
1"=1'-0"

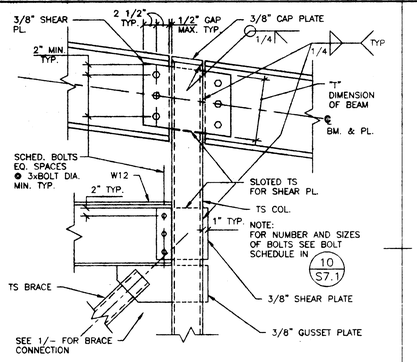

3 DETAIL
1"=1'-0"

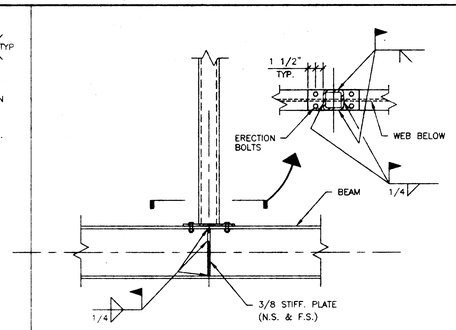

4 TS COL. TO BM. CONNECTION
1"=1'-0"

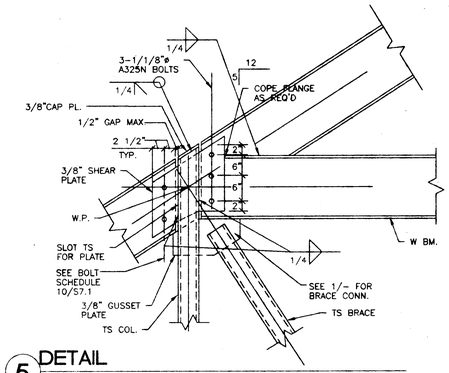

5 DETAIL
1"=1'-0"

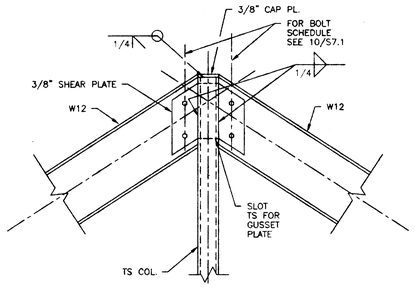

6 RIDGE DETAIL
1"=1'-0"

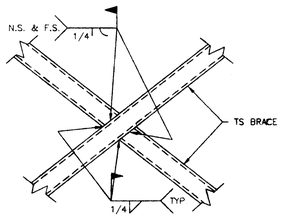

7 DETAIL
1"=1'-0"

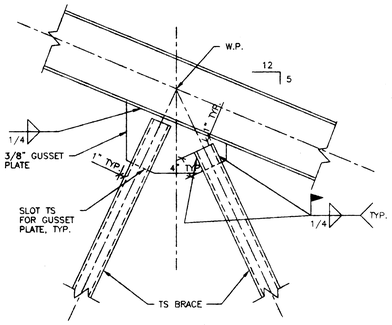

8 DETAIL
1"=1'-0"

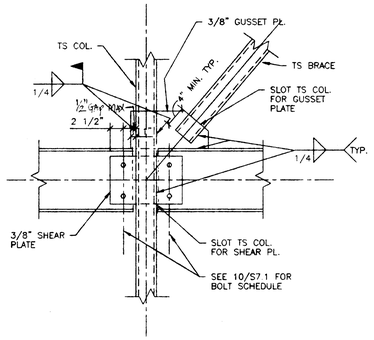

9 DETAIL
1"=1'-0"

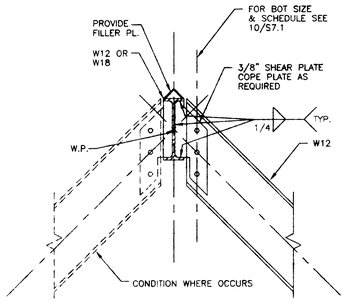

10 DETAIL
1"=1'-0"

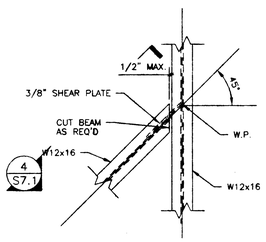

11 DETAIL
1"=1'-0"

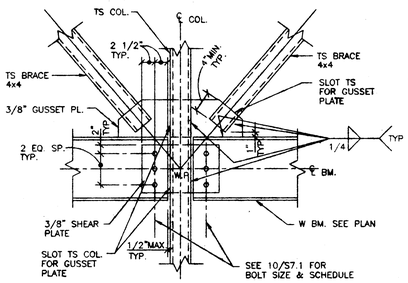

12 DETAIL
1"=1'-0"

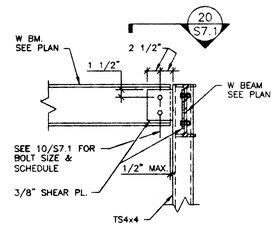

13 SECTION
1"=1'-0"

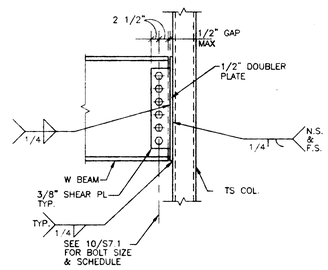

14 SECTION
1"=1'-0"

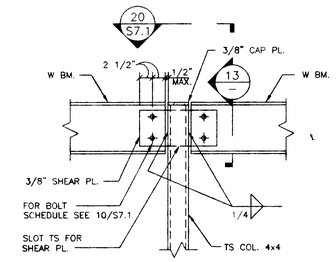

15 TYP. BEAM TO TS COL. CONN.
1"=1'-0"

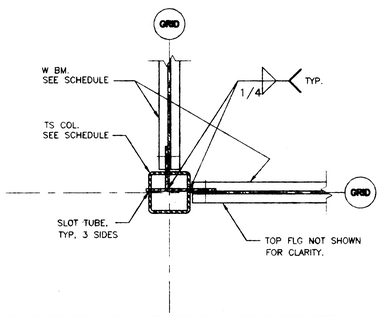

16 TYP. TUB CONNECTION AT CORNER
1"=1'-0"

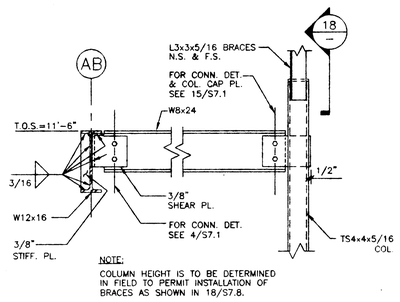

17 OVERHEAD SUPPORT FOR PARTITION
1"=1'-0"

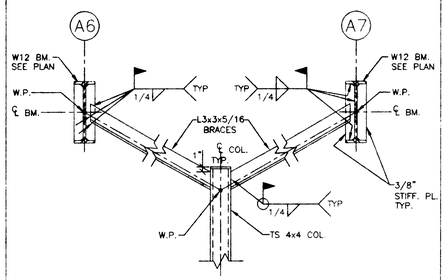

18 PARTITION SUPPORT BRACES
1"=1'-0"

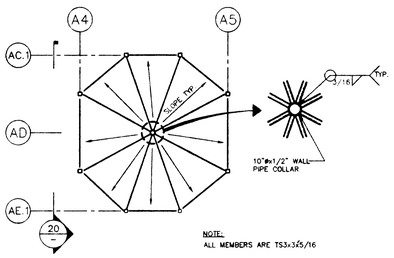

19 CUPOLA ROOF FRAMING PLAN
1"=1'-0"

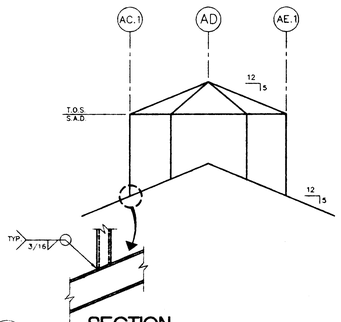

20 SECTION
N.T.S.

HKA
Harlan Krusemark - Architect
4415 Cowell Road, Suite 230
Concord, CA 94521
Tel: 925.681.1905
Fax: 925.681.1906

REGISTERED ARCHITECT HARLAN KRUSEMARK No. C8888 Exp. 9/30/ STATE OF CALIFORNIA

MFT Consulting Engineers, Inc.
120 Howard Street, Suite 420
San Francisco, CA 94105
(415) 227-0880
FAX (415) 227-0883

REGISTERED PROFESSIONAL ENGINEER JOHN FORD TAYLOR No. E-3106 EXP. 6/30/02 STATE OF CALIFORNIA

REGISTERED PROFESSIONAL ENGINEER ROBERT T. SEALE No. SE-4340 EXP. 9-30-03 STATE OF CALIFORNIA

Revisions	Date

HAWKINS SCHOOL

475 Darlene Lane
Tracy, CA 95377

Jefferson School District
7500 West Linne Road
Tracy, CA 95304

DSA FILE NO. 39-39
IDENTIFICATION STAMP
DIVISION OF THE STATE ARCHITECT
APPL 02 -102225
AC. SS
DATE

Sheet Title:
BUILDING A: ADMINISTRATION
STEEL DETAILS AND SECTIONS

Printing Date / Purpose:
08/18/00 DSA APPROVAL

Scale: AS SHOWN
Project Number: 9903.00
Sheet Number:

S7.8

of Sheets

FILE: 99646 - 71

COPYRIGHT © 2000 HARLAN KRUSEMARK - ARCHITECT (HKA) THESE DRAWINGS ARE PROPRIETARY DOCUMENTS OF HKA AND ARE NOT TO BE DISTRIBUTED, PUBLISHED OR REPRODUCED WITHOUT WRITTEN PERMISSION OF HKA.

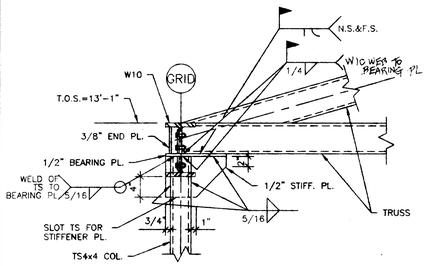

NOTES:
1. SEE 10/S7.6 FOR THE WELDING OF THE TRUSS TOP CHORD TO BOTTOM CHORD.
2. SEE 5/S7.6 FOR CONNECTION OF W10x30 BEAM TO TRUSS BOTTOM CHORD AND TS4x4x1/2 COLUMN.

1 DETAIL
1"=1'-0"

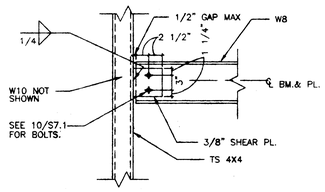

2 DETAIL
1"=1'-0"

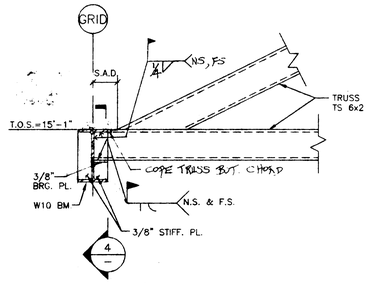

3 DETAIL
1"=1'-0"

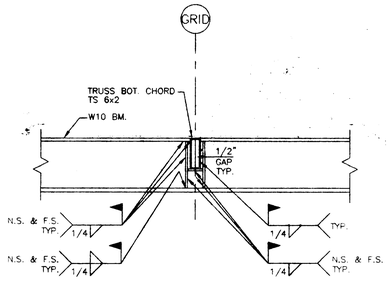

4 DETAIL
1"=1'-0"

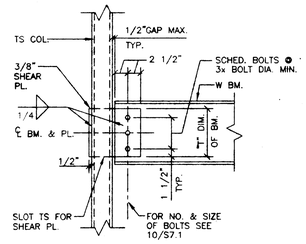

5 DETAIL
1"=1'-0"

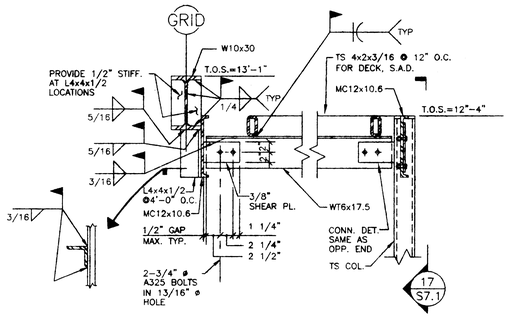

6 TRELLIS ROOF SUPPORT DETAIL
1"=1'-0"

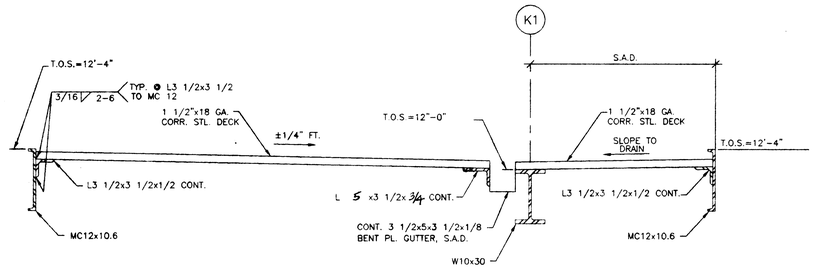

7 SECTION OF WEST PORTICO ROOF BTWN. KB - KC
1"=1'-0"

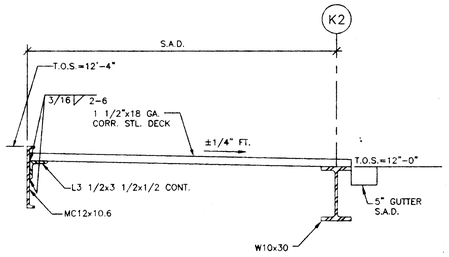

8 SECTION OF EAST PORTICO ROOF BTWN. KB-KC
1"=1'-0"

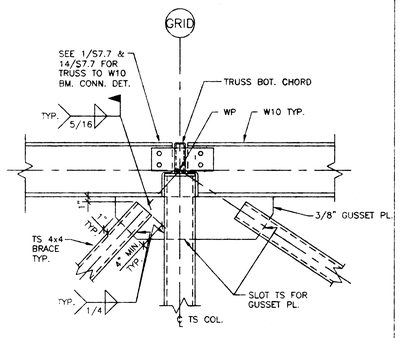

9 DETAIL
1"=1'-0"

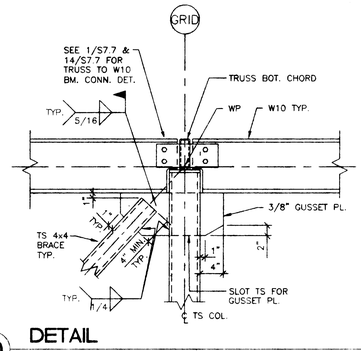

10 DETAIL
1"=1'-0"

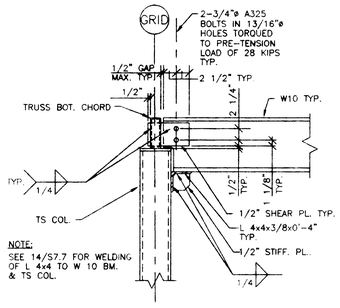

11 TRUSS-EAVE BM. CONN. DETAIL BM. ON ONE SIDE
1"=1'-0"

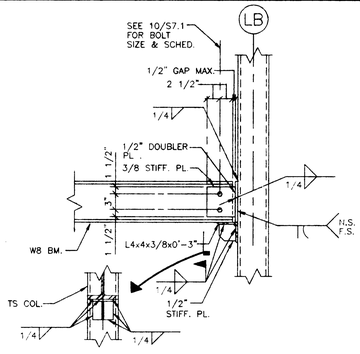

12 SECTION
1"=1'-0"

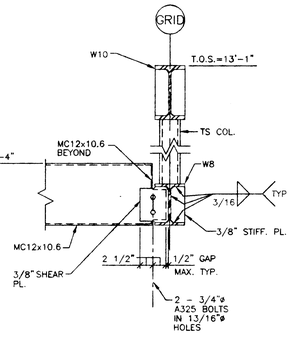

13 DETAIL
1"=1'-0"

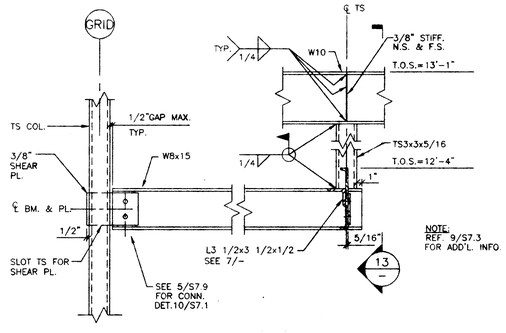

14 DETAIL
1"=1'-0"

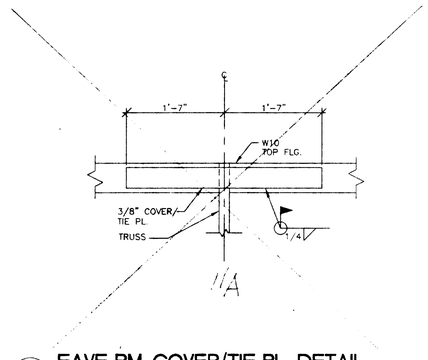

15 EAVE BM. COVER/TIE PL. DETAIL
1"=1'-0"

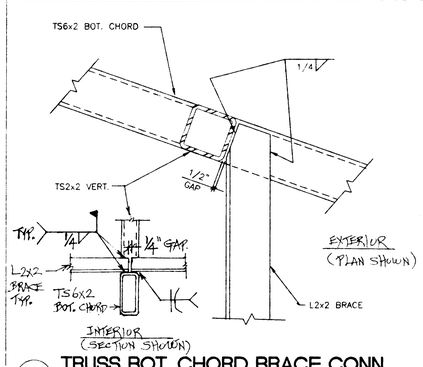

16 TRUSS BOT. CHORD BRACE CONN.
1"=1'-0"

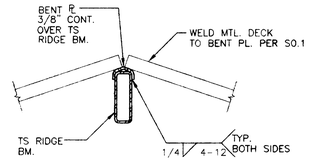

17 METAL DECK CONN. AT RIDGE BM. AND HIP BM.
N.T.S.

HKA
Harlan Krusemark - Architect
4415 Cowell Road, Suite 230
Concord, CA 94521
Tel: 925.681.1905
Fax: 925.681.1906

MFT C consulting Engineers Inc.
130 Howard Street, Suite 400
San Francisco, CA 94105
www.mftc.com
Fax (415) 227-4863

Revisions | Date

HAWKINS SCHOOL

475 Darlene Lane
Tracy, CA 95377

Jefferson School District
7500 West Linne Road
Tracy, CA 95304

DSA FILE NO. 39-39
IDENTIFICATION STAMP
DIVISION OF THE STATE ARCHITECT
APPL 02 -102225
AC. PLS SS
DATE AUG 2 4 2000

Sheet Title:
STEEL DETAILS & SECTIONS

Printing Date / Purpose:
08/18/00 DSA APPROVAL

Scale: AS SHOWN
Project Number: 99063.09
Sheet Number:

S7.9
of 30

FILE: 99646-71

COPYRIGHT © 2000 HARLAN KRUSEMARK - ARCHITECT (HKA) THESE DRAWINGS ARE PROPRIETARY DOCUMENTS OF HKA AND ARE NOT TO BE DISTRIBUTED, PUBLISHED OR REPRODUCED WITHOUT WRITTEN PERMISSION OF HKA.

H:\PROJECTS\Hawk\DSC01\DWGS\08-18-00\S4 BICK\S99646-79a.dwg Sun Aug 20 15:53:01 2000

PLUMBING LEGEND

SYMBOL	ABBREV	DESCRIPTION
	WSB	SANITARY WASTE/SEWER PIPING BELOW FLOOR
	WSS	SANITARY WASTE/SEWER PIPING ABOVE FLOOR
F	F	FIRE SPRINKLER
SD	SD	STORM DRAIN PIPING
	V	WASTE/SEWER VENT PIPING
	CW	DOMESTIC COLD WATER PIPING
	HW	DOMESTIC HOT WATER PIPING
	HWR	DOMESTIC HOT WATER RETURN PIPING
G	G	NATURAL GAS PIPING
CD	CD	CONDENSATE DRAIN
	FCO/COTG	FLOOR CLEANOUT/CLENOUT TO GRADE
	POC	POINT OF CONNECTION
XX-X		EQUIPMENT OR FIXTURE
(#)		REFER TO SHEET NOTES
	FR.	FROM
	BEL	BELOW
	DN	DOWN (PIPE PENETRATING FLOOR BELOW)
		DROP (PIPE NOT PENETRATING FLOOR BELOW)
		UP (PIPE PENETRATING FLOOR OR ROOF ABOVE)
		RISE (PIPE NOT PENETRATING FLOOR OR ROOF ABOVE)
	VTR	VENT THRU ROOF
	AD	ACCESS DOOR
	NIC	NOT IN CONTRACT
	SOV	SHUT-OFF VALVE
	WCO	WALL CLEANOUT
		SHUT-OFF VALVE IN YARD BOX

GENERAL NOTES:

A. LOCATE ALL VENTS THROUGH ROOF 10'-0" FROM OUTSIDE AIR INTAKE OF ALL HVAC UNITS ON ROOF, AND 3'-0" MINIMUM FROM 2 HOUR AREA SEPERATION WALLS.

PLUMBING FIXTURES/EQUIPMENT SCHEDULE

FIXTURE	MARK	MIN. BRANCH SIZE W	V	CW	HW	REMARKS
WATER CLOSET	WC-1	4"	2"	1 1/2"	—	WHEELCHAIR ACCESSIBLE FLOOR MOUNTED FLUSH VALVE.
WATER CLOSET	WC-2	4"	2"	1 1/2"	—	REGULAR HEIGHT FLOOR MOUNTED VALVE.
WATER CLOSET	WC-3	4"	2"	1 1/2"	—	10" HIGH FLOOR MOUNTED FLUSH VAVE.
URINAL	U-1	2"	1 1/2"	1"	—	REGULAR HEIGHT.
URINAL	U-2	2"	1 1/2"	1"	—	WHEELCHAIR ACCESSIBLE.
LAVATORY	L-1	2"	1 1/2"	3/4"	3/4"	WHEELCHAIR ACCESSIBLE, WALL HUNG.
LAVATORY	L-2	2"	1 1/2"	3/4"	—	KINDERGARTEN ACCESSIBLE.
LAVATORY	L-3	2"	1 1/2"	3/4"	—	3 STATION, WALL HUNG.
LAVATORY	L-4	2"	1 1/2"	3/4"	—	WHEELCHAIR ACCESSIBLE WALL HUNG.
LAVATORY	L-5	2"	1 1/2"	3/4"	3/4"	COUNTERTOP.
LAVATORY*	L-6	2"	1 1/2"	3/4"	3/4"	WHEELCHAIR ACCESSIBLE WALL HUNG WITH TEMPERATURE CONTROL.
LAVATORY	L-7	2"	1 1/2"	3/4"	—	4 STATION, WALL HUNG.
SINK	S-1	2"	1 1/2"	3/4"	3/4"	WHEELCHAIR ACCESSIBLE.
SINK	S-2	2"	1 1/2"	3/4"	—	WHEELCHAIR ACCESSIBLE CLASSROOM SINK.
SINK	S-3	2"	1 1/2"	3/4"	3/4"	HAND SINK IN KITCHEN.
SINK	S-4	2"	1 1/2"	3/4"	—	SCIENCE CLASSROOM SINK.
MOP SINK	MS-1	3"	2"	3/4"	3/4"	FLOOR MOUNTED.
DRINKING FOUNTAIN	DF-1	2"	1 1/2"	1/2"	—	HIGH/LOW FOR WHEELCHAIR ACCESSIBLE.
FLOOR DRAIN	FD-1	2"	2"	1/2"	—	GENERAL USAGE - SEE SPECIFICATIONS.
FLOOR DRAIN	FD-2	2"	2"	1/2"	—	WATER HEATER OR FURNACE ROOM - SEE SPECIFICATIONS.
FLOOR DRAIN	FD-3	2"	2"	1/2"	—	CAN WASH ROOM - SEE SPECIFICATIONS.
FLOOR DRAIN	FD-4	2"	2"	1/2"	—	KITCHEN - SEE SPECIFICATIONS.
FLOOR SINK	FS-1	2"	1 1/2"	1/2"	—	SEE SPECIFICATIONS.
GREASE INTERCEPTOR	GT-1	SEE SPECIFICATIONS & DET. 9/P3.1.				
WATER HEATER	WH-1	10 GALLON ON SHELF, SEE 13/P3.1.				
WATER HEATER	WH-2	6 GALLON ON SHELF, SEE 13/P3.1				
WATER HEATER	WH-3	INSTANTANEOUS POINT OF USE.				
WATER HEATER	WH-4	KITCHEN WATER HEATER.				

KITCHEN EQUIPMENT SCHEDULE

MARK	DESCRIPTION	PIPE CONNECTION SIZE INDIRECT W	W	V	HW	CW	G	REMARKS
K-9	DISPOSER	-	2"	-	-	1/2"	-	SEE 3/P3.1
K-10	DISHWASHER	-	2"	-	3/4"	-	-	-
K-11	DISHTABLE	-	2"	-	1/2"	1/2"	-	-
K-13	DOUBLE CONVECTION OVEN	-	-	-	-	-	-	120,000 BTUH
K-15	SINK	-	2"	-	2 1/2"	2 1/2"	-	SEE 9/P3.1
K-17	PREP TABLE/SINK	-	2"	-	1/2"	1/2"		-
K-20	ICE MAKER	-	1/2"	-		3/8"		-
K-21	ICE BIN	-	3/4"	-	1/2"	1/2"	1/2"	-
K-23	RANGE	-	-	-	-	-	3/4"	107,000 BTUH
K-25	STEAM KETTLE	-	-	-	1/2"	1/2"	3/4"	140,000 BTUH
K-29	COMBI OVEN/STEAMER	-	3"	-	-	1 1/2" & 3/4"	-	-

THE AUTOMATIC FIRE SPRINKLER SYSTEM SHALL CONFORM TO THE REQUIREMENTS OF THE 1996 EDITION OF THE NATIONAL FIRE PROTECTION ASSOCIATION STANDARD #13 & CITY OF TRACY FIRE DEPT. STDS.

INSTALLATION OF THE FIRE SPRINKLER SYSTEM SHALL NOT BE STARTED UNTIL COMPLETE PLANS AND SPECIFICATIONS (INCLUDING WATER SUPPLY INFORMATION AND TYPE OF EXISTING SYSTEM, IF ANY) HAVE BEEN APPROVED BY THE DIVISION OF THE STATE ARCHITECT & ARCHITECT/ENGINEER.

AT VARIOUS STAGES AND UPON COMPLETION, THE SYSTEM SHALL BE TESTED IN THE PRESENCE OF THE ENFORCING AGENCY.

HKA
Harlan Krusemark Architect, Inc.
4415 Cowell Road, Suite 120
Concord, CA 94521
Tel: 925.681.1906
Fax: 925.681.1909

HM MECHANICAL GROUP
2220 Livingston Street
Oakland, CA 94606
510.261.[illegible]
510.261.[illegible]
hmgroup@[illegible].com

Revisions Date

HAWKINS SCHOOL
(INCREMENTS #1 & #2)

475 Darlene Lane
Tracy, CA 95377

Jefferson School District
7500 West Linne Road
Tracy, CA 95304

DSA FILE NO. 39-[illegible]
IDENTIFICATION STAMP
DIVISION OF THE STATE ARCHITECT
APPL ID 2-102225
AC FLS
DATE AUG 24 2000

Sheet Title:
PLUMBING SCHEDULES AND LEGEND

Printing Date / Purpose:
08/18/00 DSA APPROVAL

Scale: NONE
Project Number:
Sheet Number:
P0.1

FILE

COPYRIGHT © 2000 HARLAN KRUSEMARK - ARCHITECT (HKA) THESE DRAWINGS ARE PROPRIETARY DOCUMENTS OF HKA AND ARE NOT TO BE DISTRIBUTED, PUBLISHED OR REPRODUCED WITHOUT WRITTEN PERMISSION OF HKA.

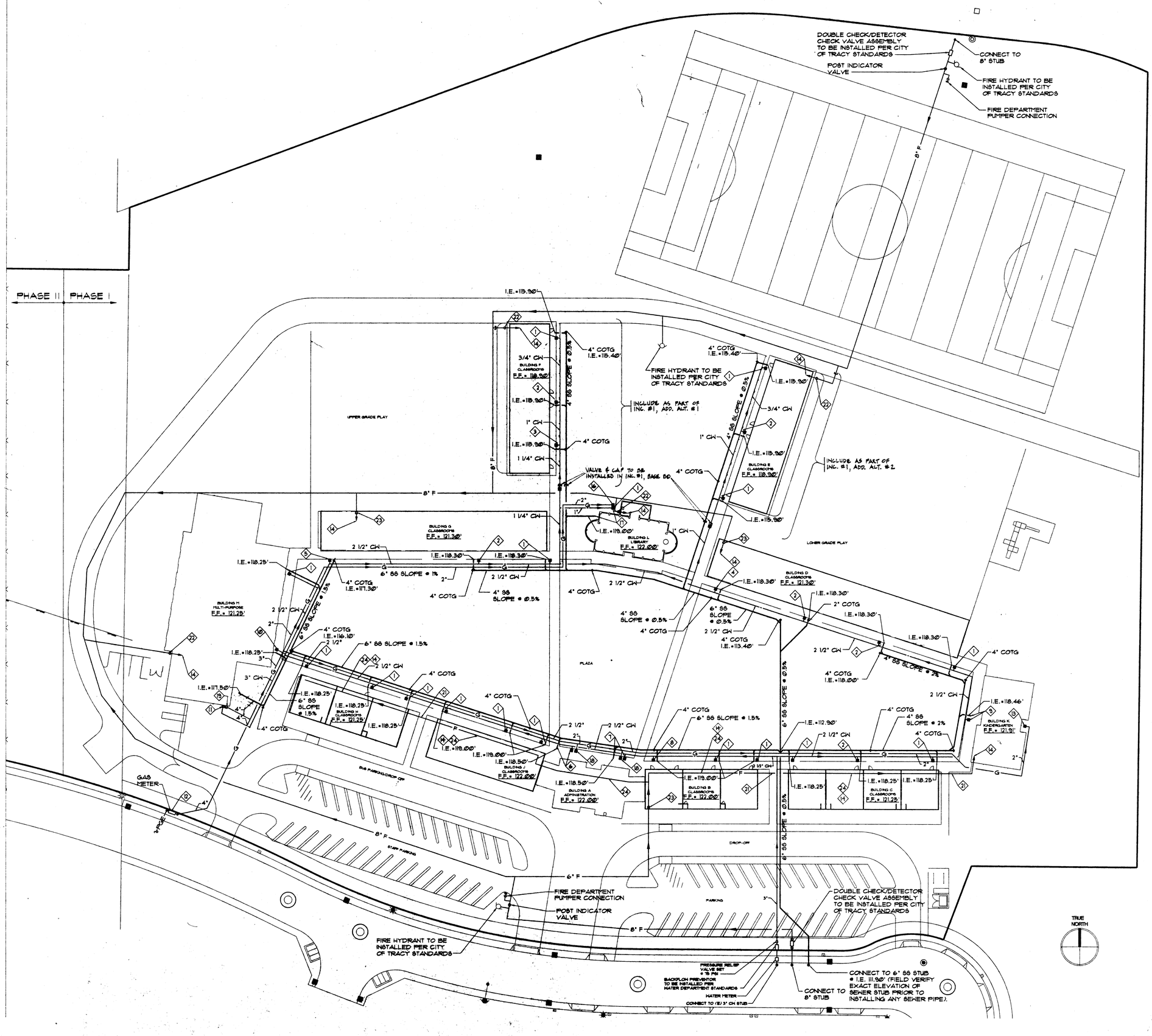

SHEET NOTES:

1. CAP 2" WASTE STUB (2 F.U.) AND TERMINATE 3/4" COLD WATER WITH VALVE IN BOX (2 F.U.)
2. CAP 2" WASTE STUB (4 F.U.) AND TERMINATE 3/4" COLD WATER WITH VALVE IN BOX (4 F.U.)
3. CAP 3" WASTE STUB (10 F.U.) AND TERMINATE 1" COLD WATER WITH VALVE IN BOX (10 F.U.)
4. CAP 4" WASTE STUB (66 F.U.) AND TERMINATE 2" COLD WATER WITH VALVE IN BOX (107 F.U.)
5. CAP 4" WASTE STUB (88 F.U.) AND TERMINATE 2" COLD WATER WITH VALVE IN BOX (113 F.U.)
6. CAP 4" WASTE STUB (12 F.U.) AND TERMINATE 2" COLD WATER WITH VALVE IN BOX (14 F.U.)
7. CAP 4" WASTE STUB (20 F.U.) AND TERMINATE 2" COLD WATER WITH VALVE IN BOX (28 F.U.)
8. CAP 3" WASTE STUB (6 F.U.) AND TERMINATE 3/4" COLD WATER WITH VALVE IN BOX (3 F.U.)
9. CAP 4" WASTE STUB (24 F.U.) AND TERMINATE 2" COLD WATER WITH VALVE IN BOX (28 F.U.)
10. CAP 4" WASTE STUB (16 F.U.) AND TERMINATE 1 1/2" COLD WATER WITH VALVE IN BOX (24 F.U.)
11. CAP 4" WASTE STUB (46 F.U.) AND TERMINATE 2" COLD WATER WITH VALVE IN BOX (38 F.U.)
12. GAS METER/REGULATOR ASSEMBLY. COORDINATE WITH PG&E FOR INSTALLATION AND LOCATION. (1,198,000 BTUH)
13. TERMINATE 2" GAS WITH VALVE IN BOX (200,000 BTUH)
14. FIRE SPRINKLER TO BUILDING SYSTEM.
15. FIRE SPRINKLER PIPE THROUGH WALL AND RUN ON ROOF OF COVERED WALK.
16. TERMINATE 2" GAS WITH VALVE IN BOX (220,000 BTUH)
17. CAP 2" WASTE STUB (2 F.U.) AND TERMINATE 1" COLD WATER WITH VALVE IN BOX (2 F.U.)
18. TERMINATE 1 1/2" GAS WITH VALVE IN BOX (120,000 BTUH)
19. TERMINATE 4" GAS WITH VALVE IN BOX (1,331,000 BTUH)
20. FIRE SPRINKLER PIPE ON ROOF OF COVERED WALK.
21. SPRINKLER PIPE SUPPORT FROM GATE STRUCTURE. PROVIDE WITH SEISMIC JOINT WHERE PIPE ENTERS BUILDING.
22. FIRE SPRINKLER RISE ON EXTERIOR OF BUILDING.
23. FIRE SPRINKLER RISER.
24. SPRINKLER PIPE INSIDE BUILDING.

HKA
Harlan Krusemark - Architect
4415 Cowell Road, Suite 230
Concord, CA 94521
Tel: 925.681.1905
Fax: 925.681.1906

HM MECHANICAL GROUP
2220 LIVEGROVE ST
OAKLAND, CA
Tel: 510-261-3022
510-261-3023
HMGOOD@AOL.COM

Revisions

HAWKINS SCHOOL
(INCREMENTS #1 & #2)

475 Darlene Lane
Tracy, CA 95377

Jefferson School District
7500 West Linne Road
Tracy, CA 95304

DSA FILE NO. 25-33
IDENTIFICATION STAMP
DIVISION OF THE STATE ARCHITECT
APPL 02 -102225
AC. FLS
DATE AUG 2 4 2000

Sheet Title:

PLUMBING SITE PLAN

Printing Date / Purpose:
08/18/00 DSA APPROVAL

Scale: 1" = 30'-0"
Project Number:
Sheet Number:

P1.1

FILE:

COPYRIGHT ©2000 HARLAN KRUSEMARK - ARCHITECT (HKA). THESE DRAWINGS ARE PROPRIETARY DOCUMENTS OF HKA AND ARE NOT TO BE DISTRIBUTED, PUBLISHED OR REPRODUCED WITHOUT WRITTEN PERMISSION OF HKA.

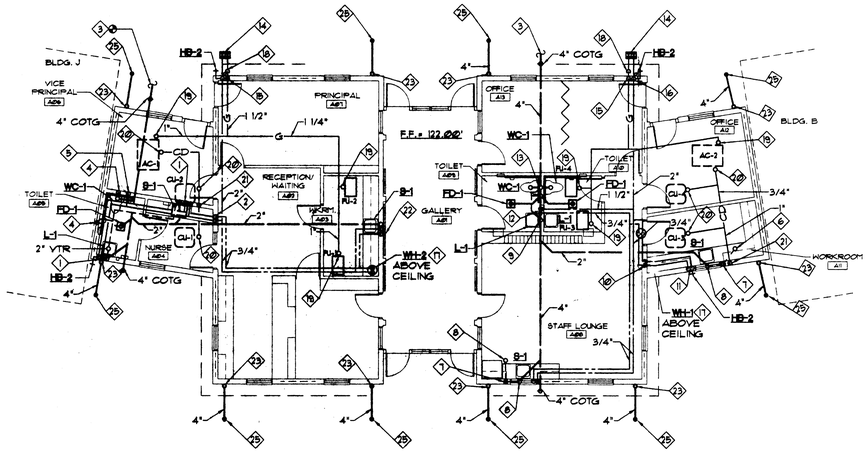

1 BUILDING A - ADMINISTRATION

SCALE: 1/8" = 1'-0"

TRUE NORTH

SHEET NOTES:

1. 3/4" HOT AND COLD WATER DROP, 2" WASTE DOWN WITH WCO AND 1 1/2" VENT RISE.
2. 1 1/2" COLD WATER AND 3/4" HOT WATER DROP TO LOWER CEILING.
3. CONNECT 4" WASTE TO SITE STUB..
4. 2" VENT FROM BELOW.
5. 1 1/2" COLD WATER DROP.
6. 1 1/2" VENT THROUGH ROOF.
7. 1 1/2" VENT RISE.
8. 2" WASTE DOWN WITH WCO AND 1 1/2" VENT OFFSET.
9. 2" WASTE DOWN AND 1 1/2" VENT RISE.
10. 3/4" HOT AND COLD WATER DROP TO LOWER CEILING.
11. 3/4" HOT AND COLD WATER DROP.
12. 1 1/2" COLD WATER AND 3/4" HOT WATER DROP.
13. 2" VENT FROM BELOW AND VENT TROUGH ROOF.
14. CONNECT 2" COLD WATER AND 1 1/2" GAS TO VALVE IN BOX.
15. 1 1/2" GAS RISE TO CEILING SPACE. (IN WALL, TYP.)
16. 2" COLD WATER FROM BELOW GRADE AND RISE.
17. RUN 3/4" DRAIN LINE FROM WATER HEATER ABOVE CEILING AND TERMINATE IN FIXED AIR GAP AT SINK TAILPIECE.
18. 1 1/2" GAS UP FROM BELOW GRADE AND PENETRATE BUILDING THROUGH EXTERIOR WALL. SLEEVE THROUGH CONC. FTG. AS REQ'D.
19. 1" GAS UP TO ROOF AND CONNECT TO EQUIPMENT WITH GAS COCK AND UNION. (SIM. @ ATTIC)
20. 3/4" CONDENSATE FROM EQUIPMENT ON ROOF.
21. 1" CONDENSATE DROP TO TAIL PIECE ADAPTER OF B-1.
22. 3/4" HOT AND COLD WATER DROP, 2" WASTE DOWN WITH WCO AND 1 1/2" VENT RISE AND VENT THROUGH ROOF.
23. CONNECT 3" RAIL TO 3" SD @ ±12" ABOVE GRADE AND DOWN TO 4" SD BELOW GRADE. COORDINATE WITH CONCRETE FOUNDATION AND SLAB ON GRADE-SEE STRUCTURAL DRAWING.
24. 4" COTG.
25. CONNECT 4" SD TO SITE STUB (I.E.=119.00').

GENERAL NOTE:

ALL EXPOSED VENTS, FLUES, ETC. THRU METAL ROOF SHALL BE PAINTED TO MATCH ROOF & SHALL BE LOCATED, WHEREVER POSSIBLE, ON N. 1/2 OF THE ROOF.

HKA
Harlan Krusemark - Architect
4415 Cowell Road, Suite 230
Concord, CA 94521
Tel: 925.681.1906
Fax: 925.681.1906

REGISTERED ARCHITECT No. C23833 Exp. 9/30/00 STATE OF CALIFORNIA

H&M MECHANICAL GROUP
2220 LIVINGSTON ST
SUITE 300
OAKLAND, CA
94606
510-281-2000 TEL
510-281-2003 FAX
HM3000@AOL.COM

REGISTERED PROFESSIONAL ENGINEER No. M20245 Exp. 9/00 MECHANICAL STATE OF CALIFORNIA

Revisions Date

HAWKINS SCHOOL (INCREMENT #2)

475 Darlene Lane
Tracy, CA 95377

Jefferson School District
7500 West Linne Road
Tracy, CA 95304

DSA FILE NO. 39-39
IDENTIFICATION STAMP
DIVISION OF THE STATE ARCHITECT
APPL 02 -102225
AC ___ FLS RVR SS ___
DATE ~~AUG 2 4 2000~~

Sheet Title:

BUILDING A

Printing Date / Purpose:
08/18/00 DSA APPROVAL

Scale: 1" = 8'-0"
Project Number: 9903.00
Sheet Number:

P2.1

of ___ Sheets

FILE:

COPYRIGHT © 2000 HARLAN KRUSEMARK - ARCHITECT (HKA) THESE DRAWINGS ARE PROPRIETARY DOCUMENTS OF HKA AND ARE NOT TO BE DISTRIBUTED, PUBLISHED OR REPRODUCED WITHOUT WRITTEN PERMISSION OF HKA.

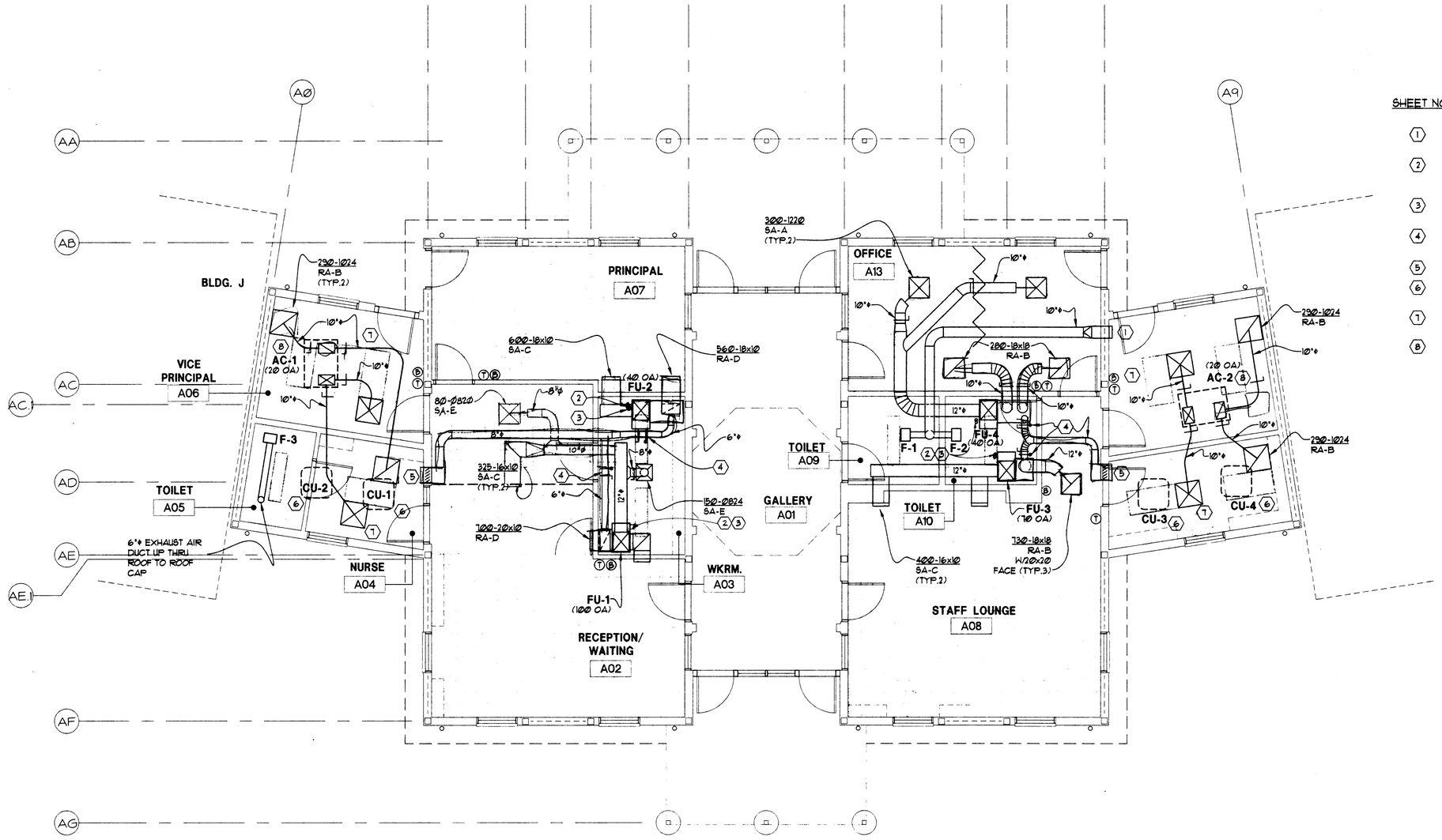

SHEET NOTES

1. WALL CAP PENN MODEL NO. WC-10. MOUNT WALL CAP 3' ABOVE OR 10' AWAY OUTSIDE AIR INTAKE.
2. 2" COMBUSTION AIR VENT ~~PIPE UP THRU ROOF SEE ARCHITECTURAL DRAWING FOR PIPE THRU ROOF DETAIL (TYP.)~~ & 2" FLUE VENT PIPE UP TO CONCENTRIC VENT PIPE.
3. ~~2" FLUE VENT PIPE UP THRU ROOF SEE ARCHITECTURAL DRAWING FOR PIPE THRU ROOF DETAIL (TYP.)~~ CONCENTRIC VENT PIPE UP THRU ROOF, SEE 4/M0.1.
4. 6"ø OUTSIDE AIR INTAKE DUCT WITH VOLUME DAMPER AND BACKDRAFT DAMPER.
5. 16x12 OUTSIDE AIR INTAKE LOUVER.
6. SEE DETAIL 9 AND ASSOCIATED DETAILS ON SHEET M0.1 FOR ROOFTOP CONDENSING UNIT MOUNTING.
7. SUPPLY AIR DIFFUSER, 300 CFM WITH 10"ø NECK SIZE TYPE A, SEE SCHEDULE.
8. SEE DETAIL 1, SHEET M0.1 FOR ROOFTOP UNIT MOUNTING

1 BLDG. A - ADMINISTRATION : MECHANICAL FLOOR PLAN

SCALE: 1/4" = 1'-0"

TRUE NORTH

FURNACE SCHEDULE

NO.	FU-1	FU-2	FU-3	FU-4
CARRIER MODEL NO.	58MCA040-12	58MCA040-08	58MCA040-12	58MCA040-08
INPUT - KBTUH	40.0	40.0	40.0	40.0
OUTPUT - KBTUH	31.2	31.2	31.2	31.2
CFM	800	600	800	600
AIR PRESS. DROP - IN. WC	0.7	0.7	0.7	0.7
MAX. UNIT AMPS	7.3	6.1	7.3	6.1
ELECT. - V/ø/HZ	115/1/60	115/1/60	115/1/60	115/1/60
OPER. WT. - LBS.	210	200	210	200
ACCESSORIES:	CC1, FL, CV	CC2, FL, CV	CC1, FL, CV	CC2, FL, CV

ACCESSORIES:
CC1 - COOLING COIL - CK5A024
CC2 - COOLING COIL - CK5A018
FL - FILTER

CONDENSING UNIT SCHEDULE

NO.	CU-1	CU-2	CU-3	CU-4
CARRIER MODEL NO.	38CKC024	38CKC018	38CKC024	38CKC018
COOLING CAPACITY - KBTUH	22.4	17.2	22.4	17.2
EER/SEER	9.4/11.0	8.8/10	9.4/11.0	8.8/10
MCA/MOCP	14.4/20.0	12.8/20.0	14.4/20.0	12.8/20.0
ELECT. - V/ø/HZ	208/1/60	208/1/60	208/1/60	208/1/60
OPER. WT. - LBS.	120	120	120	120
ACCESSORIES:	RT	RT	RT	RT

ACCESSORIES:
RT - REFRIGERANT TUBING (PRECHARGED)

FAN SCHEDULE

NO.	F-1	F-2	F-3
PENN MODEL NO.	Z6H	Z6H	Z6H
MAX. SONES	3.1	3.1	3.1
TYPE	B	B	B
MATERIAL	ST	ST	ST
DRIVE TYPE	DIRECT	DIRECT	DIRECT
CFM	122	122	122
EXT. STATIC PRESS. - IN. WC	0.375	0.375	0.375
APPROX. RPM	1550	1550	1550
MOTOR HP (WATT)	(108)	(108)	(108)
ELECT. - V/ø/HZ	120/1/60	120/1/60	120/1/60
OPER. WT. - LBS.	20	20	20
ACCESSORIES	BD,RJ	BD,RJ	BD,RJ
REMARKS	1	1	1

TYPE:
A - CEILING MOUNTED VENTILATOR

ACCESSORIES:
BD - BACKDRAFT DAMPER
RJ - ROOF JACK

1. CONTROLLED BY LIGHT SWITCH, SEE 7/M0.2 W/TIME DELAY OF 30 SEC.

ROOFTOP GAS/ELECTRIC SCHEDULE

NO.	AC-1	AC-2
CARRIER MODEL NO.	48GS1840	48GS1840
NET TOTAL CLG. CAP. - KBTUH @ ARI	18.0	18.0
NET SENSIBLE CLG. CAP. - KBTUH @ ARI	12.0	12.0
HEATING INPUT - KBTUH	40.0	40.0
AFUE - %	80.0	80.0
EER/SEER	--/10.0	--/10.0
AIR FLOW - CFM	600	600
EXT. STATIC PRESS. - IN. WC	0.6	0.6
MCA/MOCP	13.9/20.0	13.9/20.0
ELECT. - V/ø/HZ	208/1/60	208/1/60
OPER. WT. - LBS	350	350
ACCESSORIES	OH, RC	OH, RC
REMARKS	--	--

ACCESSORIES:
OH - OUTSIDE AIR HOOD
RC - ROOF CURB

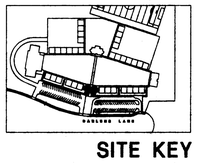

SITE KEY

COPYRIGHT © 2000 HARLAN KRUSEMARK - ARCHITECT (HKA) THESE DRAWINGS ARE PROPRIETARY DOCUMENTS OF HKA AND ARE NOT TO BE DISTRIBUTED, PUBLISHED OR REPRODUCED WITHOUT WRITTEN PERMISSION OF HKA.

HKA
Harlan Krusemark - Architect
4415 Cowell Road, Suite 230
Concord, CA 94521
Tel: 925.681.1905
Fax: 925.681.1906

LICENSED ARCHITECT HARLAN KRUSEMARK No. 12833 Exp. 9/30/01 STATE OF CALIFORNIA

HM MECHANICAL GROUP
2220 LIVINGSTON ST
SUITE 200
OAKLAND, CA
94606
510-281-2000 TEL
510-281-2003 FAX
HMSOCO@AOL.COM

REGISTERED PROFESSIONAL ENGINEER No. M20245 Exp. 9/00 MECHANICAL STATE OF CALIFORNIA

Revisions Date

HAWKINS SCHOOL
(INCREMENT #2)

475 Darlene Lane
Tracy, CA 95377

Jefferson School District
7500 West Linne Road
Tracy, CA 95304

DSA FILE NO. 39-39
IDENTIFICATION STAMP
DIVISION OF THE STATE ARCHITECT
APPL 02 -102225
AC. ___ FLS. F/W SS. ___
DATE AUG 24 2000

Sheet Title:
BLDG. A - ADMINISTRATION: MECHANICAL FLOOR PLAN AND SCHEDULES

Printing Date / Purpose:
08/18/00 DSA APPROVAL

Scale: 1/4" = 1'-0"
Project Number: 9903.00
Sheet Number:

M2.1

of Sheets

FILE:

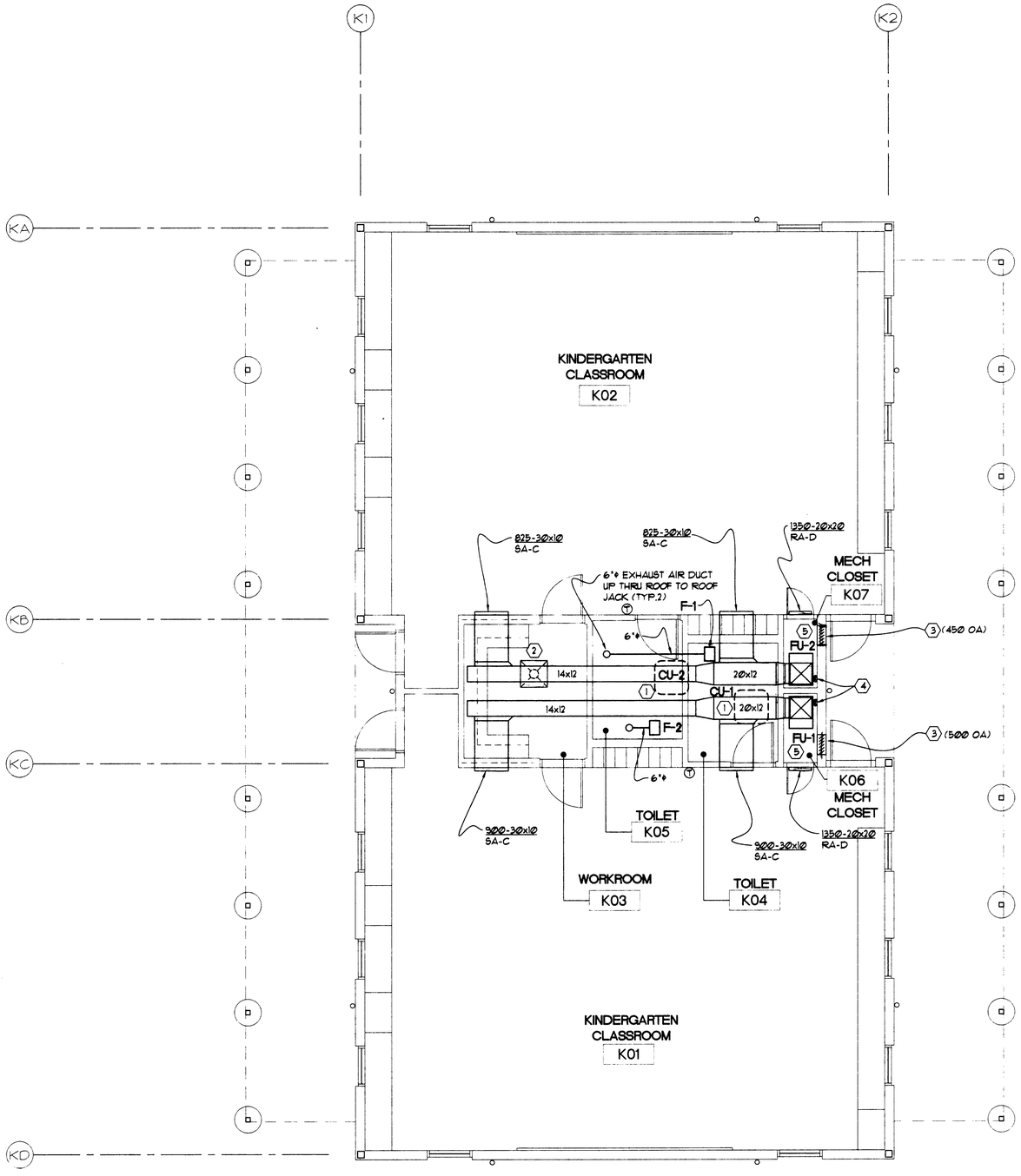

1 BLDG. K - KINDERGARTEN: MECHANICAL FLOOR PLAN
SCALE: 1/4" = 1'-0"

TRUE NORTH

SHEET NOTES

1. CONDENSING UNIT ON ROOF SEE DETAIL 9 AND ASSOCIATED DETAILS ON SHEET M0.1
2. SUPPLY AIR DIFFUSER, 150 CFM, 8"ø NECK SIZE, TYPE A SEE SCHEDULE.
3. 20x20 OUTSIDE AIR INTAKE LOUVER WITH VOLUME AND BACKDRAFT DAMPER.
4. 2" FLUE VENT AND COMBUSTION AIR VENT PIPE UP ~~THRU ROOF SEE~~ TO CONCENTRIC VENT THRU ROOF, SEE DETAIL 4/M0.1
5. SEE DETAIL 7, SHEET M0.1 FOR FURNACE MOUNTING DETAIL.

FAN SCHEDULE

NO.	F-1	F-2
PENN MODEL NO.	Z6H	Z6H
MAX. SONES	3.1	3.1
TYPE	B	B
MATERIAL	ST	ST
DRIVE TYPE	DIRECT	DIRECT
CFM	122	122
EXT. STATIC PRESS. - IN. WC	0.375	0.375
APPROX. RPM	1550	1550
MOTOR HP (WATT)	(100)	(100)
ELECT. - V/Ø/HZ	120/1/60	120/1/60
OPER. WT. - LBS.	20	20
ACCESSORIES	BD,RJ	BD,RJ
REMARKS	1	1

TYPE:
A - CEILING MOUNTED VENTILATOR

ACCESSORIES:
BD - BACKDRAFT DAMPER
RJ - ROOF JACK

1. CONTROLLED BY LIGHT SWITCH, SEE 7/M0.2 W/TIME DELAY OF 30 SEC.

FURNACE SCHEDULE

NO.	FU-1	FU-2
CARRIER MODEL NO.	58MCA100-20	58MCA100-20
INPUT - KBTUH	100.0	100.0
OUTPUT - KBTUH	93.0	93.0
CFM	1700	1700
AIR PRESS. DROP - IN. WC	0.7	0.7
MAX. UNIT AMPS	14.8	14.8
ELECT. - V/Ø/HZ	115/1/60	115/1/60
OPER. WT. - LBS.	250	250
ACCESSORIES:	CCI, FL, CV	CCI, FL, CV

ACCESSORIES:
CCI - COOLING COIL - CK5A060
FL - FILTER
CV - CONCENTRIC VENT

CONDENSING UNIT SCHEDULE

NO.	CU-1	CU-2
CARRIER MODEL NO.	38CKC060	38CKC060
COOLING CAPACITY - KBTUH	57.0	57.0
EER/SEER	9.4/10.5	9.4/10.5
MCA/MOCP	12.1/15	12.1/15
ELECT. - V/Ø/HZ	460/3/60	460/3/60
OPER. WT. - LBS.	250	250
ACCESSORIES:	RT	RT

ACCESSORIES:
RT - REFRIGERANT TUBING (PRECHARGED)

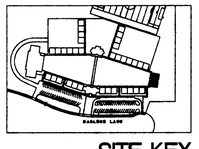

SITE KEY

HKA
Harlan Krusemark - Architect
4415 Cowell Road, Suite 230
Concord, CA 94521
Tel: 925.681.1905
Fax: 925.681.1906

LICENSED ARCHITECT HARLAN KRUSEMARK No. 12833 Exp. 9/30/01 STATE OF CALIFORNIA

HM MECHANICAL GROUP
2220 LIVINGSTON ST
SUITE 200
OAKLAND, CA
94606
510:281-5000 TEL
510:281-5003 FAX
HMS000@AOL.COM

REGISTERED PROFESSIONAL ENGINEER MARK L. MARTINEZ No. M20245 Exp. 6/30 MECHANICAL STATE OF CALIFORNIA

Revisions Date

HAWKINS SCHOOL
(INCREMENT #2)

475 Darlene Lane
Tracy, CA 95377

Jefferson School District
7500 West Linne Road
Tracy, CA 95304

DSA FILE NO. 39-32
IDENTIFICATION STAMP
DIVISION OF THE STATE ARCHITECT
APPL 02 -102225
AC ___ FLS BR 88 CK
DATE AUG 2 4 2000

Sheet Title:
BLDG. K - KINDERGARTEN:
MECHANICAL FLOOR PLAN
AND SCHEDULES

Printing Date / Purpose:
- 08/18/00 DSA APPROVAL

Scale: 1/4" = 1'-0"
Project Number: 9803.00
Sheet Number:

M2.2

of Sheets

FILE

COPYRIGHT © 2000 HARLAN KRUSEMARK - ARCHITECT (HKA) THESE DRAWINGS ARE PROPRIETARY DOCUMENTS OF HKA AND ARE NOT TO BE DISTRIBUTED, PUBLISHED OR REPRODUCED WITHOUT WRITTEN PERMISSION OF HKA.

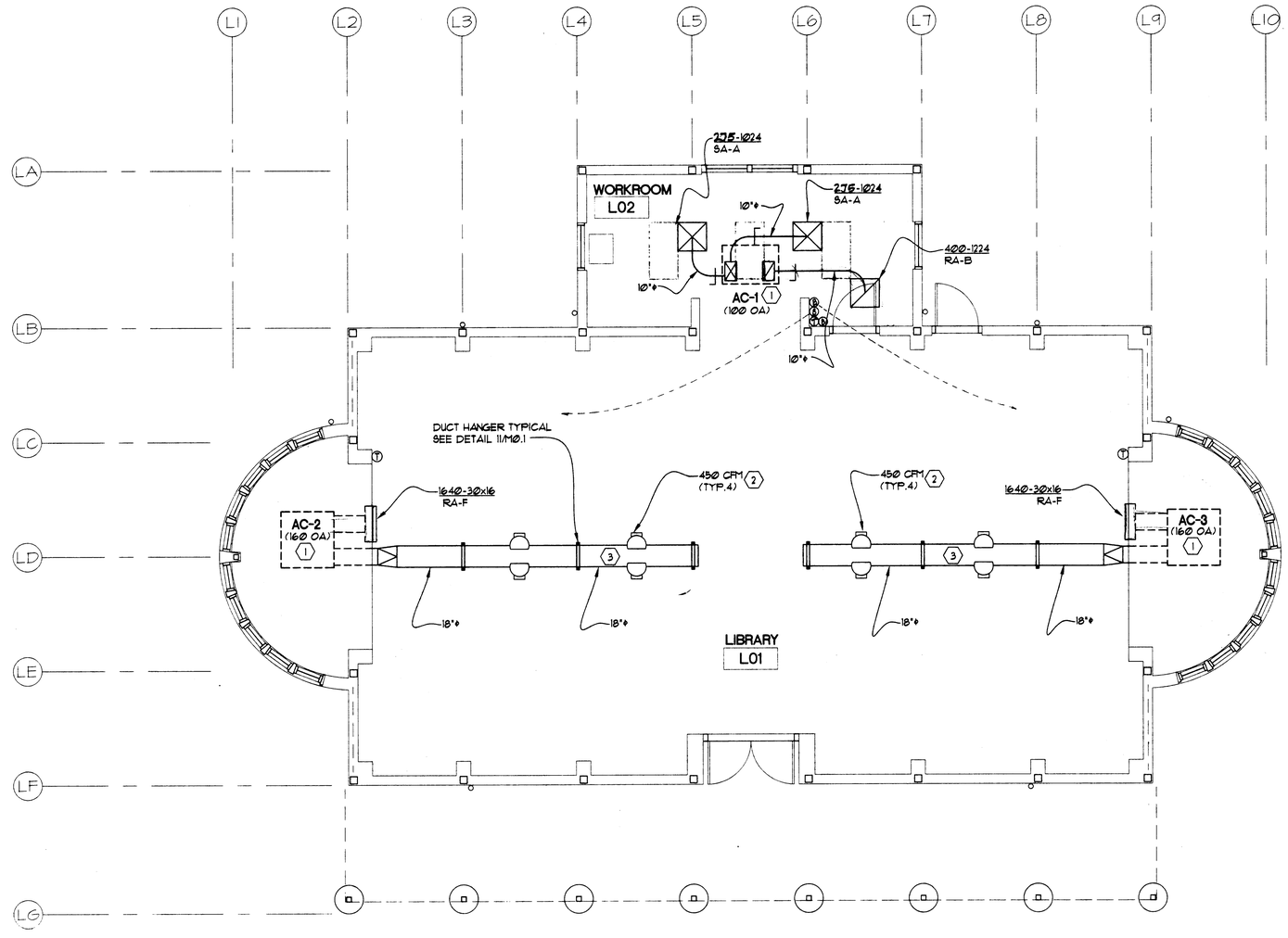

1 BLDG. L - LIBRARY: MECHANICAL FLOOR PLAN
SCALE: 1/4" = 1'-0"

SHEET NOTES

1. AC UNIT MOUNTING ON ROOF SEE DETAIL 1, SHEET M0.1
2. SEIHO ANODIZED ALUMINUM SPOT LOUVER MODEL NO. FK-12 WITH ADJUSTABLE AIRFLOW
3. FOR DUCT SUPPORT MOUNTING SEE DETAIL 11, SHEET M0.1

ROOFTOP GAS/ELECTRIC SCHEDULE			
NO.	AC-1	AC-2	AC-3
CARRIER MODEL NO.	48GS1840	48GX6090	48GX6090
NET TOTAL CLG. CAP. - KBTUH @ ARI	18.0	58.0	58.0
NET SENSIBLE CLG. CAP. - KBTUH @ ARI	12.0	42.0	42.0
HEATING INPUT - KBTUH	40.0	90.0	90.0
AFUE - %	80.0	78.6	78.6
EER/SEER	--/10.0	--/12.0	--/12.0
AIR FLOW - CFM	600	1800	1800
EXT. STATIC PRESS. - IN. WC	0.6	0.7	0.7
MCA/MOCP	13.9/20.0	15.4/20	15.4/20.
ELECT. - V/Ø/HZ	208/1/60	460/3/60	460/3/60
OPER. WT. - LBS	350	580	580
ACCESSORIES	OH, RC	OH, RC	OH, RC
REMARKS	--	--	--

ACCESSORIES:
OH - OUTSIDE AIR HOOD
RC - ROOF CURB - 14" H. W/CANFAB VIBRATION ISOLATION RAIL, SEE 2/M0.1

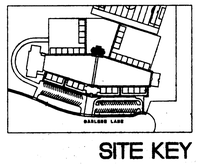

SITE KEY

HKA
Harlan Krusemark - Architect
4415 Cowell Road, Suite 230
Concord, CA 94521
Tel: 925.681.1905
Fax: 925.681.1906

LICENSED ARCHITECT
HARLAN KRUSEMARK
No. C23833
Exp. 9/30/01
STATE OF CALIFORNIA

HM MECHANICAL GROUP
2220 LIVINGSTON ST
SUITE 200
OAKLAND, CA
94606
510-281-5009 TEL
510-281-5005 FAX
HMGROUP@AOL.COM

REGISTERED PROFESSIONAL ENGINEER
MICHAEL L. HUNTER
No. M20245
Exp. 9/30
MECHANICAL
STATE OF CALIFORNIA

Revisions Date

HAWKINS SCHOOL
(INCREMENT #2)

475 Darlene Lane
Tracy, CA 95377

Jefferson School District
7500 West Linne Road
Tracy, CA 95304

DSA FILE NO. 39-39
IDENTIFICATION STAMP
DIVISION OF THE STATE ARCHITECT
APPL 02 -102225
AC ___ FLS DWS SR CCC
DATE AUG 24 2000

Sheet Title:
BLDG. L - LIBRARY:
MECHANICAL FLOOR PLAN
AND SCHEDULES

Printing Date / Purpose:
- 08/18/00 DSA APPROVAL

Scale: 1/4" = 1'-0"
Project Number: 9903.00
Sheet Number:

M2.3

of

FILE

COPYRIGHT © 2000 HARLAN KRUSEMARK - ARCHITECT (HKA) THESE DRAWINGS ARE PROPRIETARY DOCUMENTS OF HKA AND ARE NOT TO BE DISTRIBUTED, PUBLISHED OR REPRODUCED WITHOUT WRITTEN PERMISSION OF HKA.

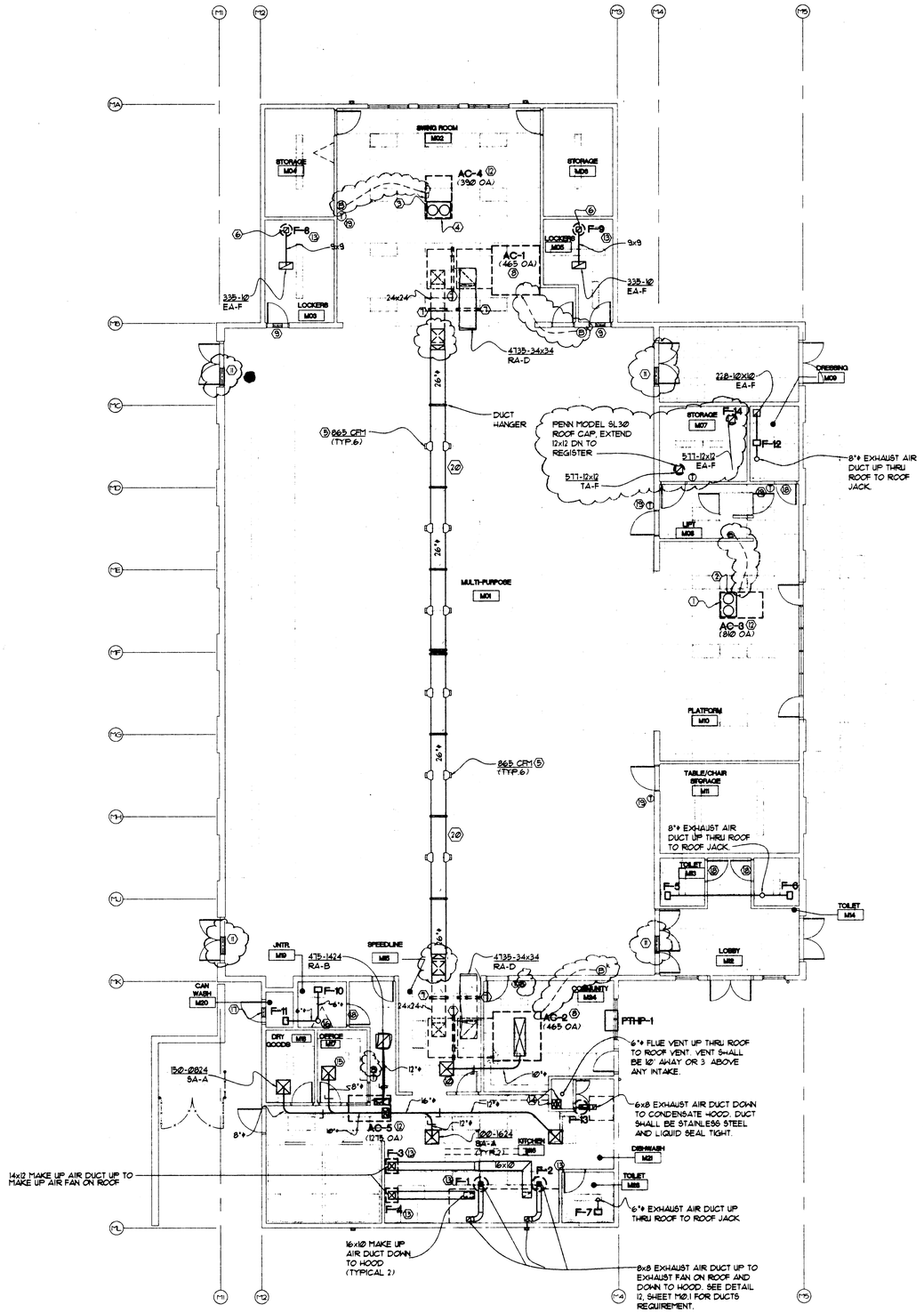

1 BLDG. M - MULTI - PURPOSE: MECHANICAL FLOOR PLAN
SCALE: 1/8" = 1'-0"

SHEET NOTES

1. 'CANFAB' CONCENTRIC DIFFUSER CONCENTRIC FLEX DUCT PART # CF48DJØ12FLXDCT
2. 'CANFAB' CONCENTRIC DIFFUSER, DIFFUSER GRILLE, PART # CF48DJØ12DIFGRL FOR T-BAR CEILING
3. 'CANFAB' CONCENTRIC DIFFUSER CONCENTRIC FLEX DUCT PART # CF48DJØ48FLXDCT.
4. 'CANFAB' CONCENTRIC DIFFUSER, DIFFUSER GRILLE, PART # CF48DJØ48DIFGRL FOR T-BAR CEILING
5. SEIHO ANODIZED ALUMINUM SPOT LOUVER MODEL NO. PK-12 WITH ADJUSTABLE AIRFLOW
6. 9x9 EXHAUST AIR DUCT UP TO EXHAUST FAN ON ROOF.
7. ROOF DUCT SUPPORT SEE DETAIL 5, SHEET MØ.1
8. ROOFTOP UNIT MOUNTING SEE DETAIL 2, SHEET MØ.1
9. 16x12 DOOR LOUVER COORDINATE WITH ARCHITECTURAL DRAWING
10. SUPPLY AIR DIFFUSER, 3ØØ CFM, 1Ø"ϕ NECK SIZE, TYPE A SEE SCHEDULE.
11. 3Øx48 RELIEF AIR LOUVER WITH WEIGHTED BACKDRAFT DAMPER ON ROOF ABOVE (TYP. 4)
12. ROOFTOP UNIT MOUNTING, REFER TO SCHEDULE FOR DETAIL REFERENCE
13. FAN MOUNTING ON ROOF SEE DETAIL 3, SHEET MØ.1
14. 16x16 COMBUSTION AIR DUCT UP TO GRAVITY INTAKE HOOD "PENN" AIRLETTE MODEL WITH ROOF CURB. 16x8 COMBUSTION AIR DUCT DOWN TO WITHIN 12" BELOW CEILING, AND 16x8 DOWN TO WITHIN 12" ABOVE FLOOR
15. SUPPLY AIR DIFFUSER, 2ØØ CFM, 8"ϕ NECK SIZE, TYPE A SEE SCHEDULE.
16. 6"ϕ EXHAUST AIR DUCT UP THRU ROOF TO ROOF JACK.
17. PROVIDE 16x12 DOOR LOUVER FOR CAN WASHER ROOM.
18. PROVIDE 1" UNDERCUT AT DOOR.
19. PROVIDE WIREGUARDS FOR THERMOSTAT.
20. FOR DUCT SUPPORT SEE DETAIL 1Ø, SHEET MØ.1

PACKAGE TERMINAL HEAT PUMP SCHEDULE	
NO.	PTHP-1
CARRIER MODEL NO.	525QA5144
EER/HSPF	8.2/3.28
NET TOTAL CLG. CAP. - KBTUH @ ARI	13.5
TOTAL HTG. CAP. - KBTUH @ ARI	12.Ø
NOMINAL AIRFLOW - CFM	35Ø
MAX. AMPS	19.6
MOCP	3Ø
ELECT. - V/ϕ/HZ	265/1/6Ø
OPER. WEIGHT - LBS.	126
ACCESSORIES:	
UNIVERSAL DRAIN KIT	
CUSTOM 48" WIDE ARCH. GRILLE WITH END BLANKOFFS, COLOR AS SELECTED BY ARCH., PACKAGE FOR REMOTE EMS CONTROL	

ROOFTOP GAS/ELECTRIC SCHEDULE					
NO.	AC-1	AC-2	AC-3	AC-4	AC-5
CARRIER MODEL NO.	48HJDØ17	48HJDØ17	48HJDØØ6	48HJDØØ5	48HJDØØ6
NET TOTAL CLG. CAP. - KBTUH @ ARI	195.6	195.6	62.5	48.4	62.5
NET SENSIBLE CLG. CAP. - KBTUH @ ARI	144.8	144.8	43.8	33.6	43.8
HEATING INPUT - KBTUH	275.Ø	275.Ø	72.Ø	72.Ø	72.Ø
AFUE - %	81.Ø	81.Ø	82.Ø	82.Ø	82.Ø
EER/SEER	1Ø.3/--	1Ø.3/--	11.Ø/13	11.Ø/13	11.Ø/13
AIR FLOW - CFM	52ØØ	52ØØ	18ØØ	145Ø	18ØØ
EXT. STATIC PRESS. - IN. WC	Ø.7	Ø.7	Ø.8	Ø.7	Ø.8
MCA/MOCP	34/5Ø	34/5Ø	14.7/2Ø	11.9/15	14.7/2Ø
ELECT. - V/ϕ/HZ	46Ø/3/6Ø	46Ø/3/6Ø	46Ø/3/6Ø	46Ø/3/6Ø	46Ø/3/6Ø
OPER. WT. - LBS	25ØØ	25ØØ	72Ø	7ØØ	72Ø
ACCESSORIES	AE, CO, RC#	AE, CO, RC#	OH, RC#	OH, RC	OH, RC
REMARKS	--	--	--	--	--
ACCESSORIES: AE- INTEGRATED AIR ECONOMIZER CO - CARBON DIOXIDE SENSOR OH - OUTSIDE AIR HOOD RC - 14" HIGH ROOF CURB (REF. DTL. 1/MØ.1) RC# - 14" HIGH ROOF CURB WITH CANFAB SEISMIC VIBRATION RAIL ISOLATOR (REF. DTL. 2/MØ.1)					

FAN SCHEDULE								
NO.	F-1, 2	F-3, 4	F-5, 6, 7	F-8, 9	F-10, 11	F-12	F-13	F-14
PENN MODEL NO.	FX16R	MU1ØR	Z6H	DX11Q	Z5H	TDA-Z815	FX11R	DX11R
MAX. SONES	1Ø.1	6.2	3.1	4.6	2.8	2.9	6.8	6.6
TYPE	B	C	A	D	A	E	B	D
MATERIAL	ST	ST	ST	ST	ST	ST	AL	ST
DRIVE TYPE	DIRECT	DIRECT	DIRECT	DIRECT	DIRECT	DIRECT	DIRECT	DIRECT
CFM	17ØØ	1Ø63	122	335	9Ø	228	4ØØ	577
EXT. STATIC PRESS. - IN. WC	Ø.375	Ø.375	Ø.375	Ø.375	Ø.381	Ø.375	Ø.375	Ø.25
APPROX. RPM	1544	13Ø5	155Ø	1193	155Ø	1Ø5Ø	155Ø	155Ø
MOTOR HP (WATT)	1/2	1/2	(1ØØ)	1/5	(79)	(84)	1/7	1/7
ELECT. - V/ϕ/HZ	46Ø/3/6Ø	46Ø/3/6Ø	12Ø/1/6Ø	12Ø/1/6Ø	12Ø/1/6Ø	12Ø/1/6Ø	12Ø/1/6Ø	12Ø/1/6Ø
OPER. WT. - LBS.	125	34Ø	2Ø	9Ø	2Ø	4Ø	7Ø	7Ø
ACCESSORIES	BD,FTC,VC,SC	BD,RC,SC	BD,RJ	BD,RC,SC	BD,RJ	BD,RJ	BD,RC	BD,RC
REMARKS	2	2	1	1	1	3	4	5

TYPE:
A - CEILING MOUNTED VENTILATOR
B - UPBLAST ROOFTOP EXHAUST FAN
C - MAKE UP AIR FAN
D - ROOFTOP CENTRIFUGAL VENTILATOR
E - CEILING INLINE VENTILATOR

ACCESSORIES:
BD - BACKDRAFT DAMPER
FTC -FATRAP CONFIGURATION
RC - ROOF CURB
RJ - ROOF JACK
SC - SPEED CONTROLLER
VC - VENTILATED ROOF CURB

REMARKS
1 - CONTROLLED BY LIGHT SWITCH (USE PENN MODEL AM12 TIME DELAY SWITCH WHICH CONTROLS BOTH THE LIGHT AND THE FAN). SEE 1/MØ.2 W/TIME DELAY OF 3Ø SEC.
2 - INTERLOCK WITH AC-5, SEE 1/MØ.2 CONTROL DIAGRAM
3 - INTERLOCK WITH AC-3
4 - CONTROLLED BY HOOD SWITCH
5 - CONTROL BY LINE VOLTAGE THERMOSTAT, MAKE ON RISE

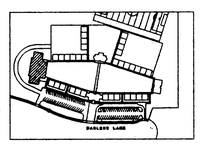

SITE KEY

HKA
Harlan Krusemark - Architect
4415 Cowell Road, Suite 230
Concord, CA 94521
Tel: 925.681.1905
Fax: 925.681.1906

LICENSED ARCHITECT HARLAN KRUSEMARK No. C23833 Exp. 9/30/01 STATE OF CALIFORNIA

HM MECHANICAL GROUP
2220 LIVINGSTON ST
SUITE 200
OAKLAND, CA
94606
510-261-5000 TEL
510-261-5003 FAX
HM5000@AOL.COM

REGISTERED PROFESSIONAL ENGINEER RICHARD L. HARRISON No. M5Ø245 Exp. 9/Ø4 MECHANICAL STATE OF CALIFORNIA

Revisions Date

HAWKINS SCHOOL (INCREMENT #2) #1
475 Darlene Lane
Tracy, CA 95377

Jefferson School District
7500 West Linne Road
Tracy, CA 95304

DSA FILE NO. 39-38
IDENTIFICATION STAMP
DIVISION OF THE STATE ARCHITECT
APPL 02 -102225
AC___ FLS___ SS___
DATE

Sheet Title:
BLDG. M - MULTI - PURPOSE: MECHANICAL FLOOR PLAN AND SCHEDULES

Printing Date / Purpose:
08/18/00 DSA APPROVAL

Scale: 1/8" = 1'-0"
Project Number: 9903.00
Sheet Number:

M2.4

of Sheets

FILE:

COPYRIGHT © 2000 HARLAN KRUSEMARK - ARCHITECT (HKA) THESE DRAWINGS ARE PROPRIETARY DOCUMENTS OF HKA AND ARE NOT TO BE DISTRIBUTED, PUBLISHED OR REPRODUCED WITHOUT WRITTEN PERMISSION OF HKA.

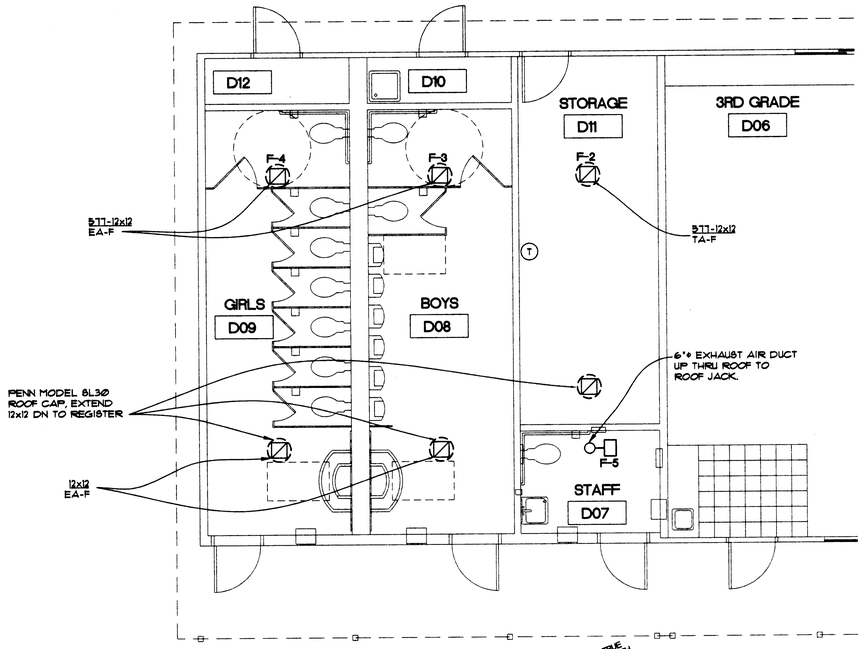

2 BUILDING D - MECHANICAL FLOOR PLAN
SCALE: 1/4" = 1'-0"

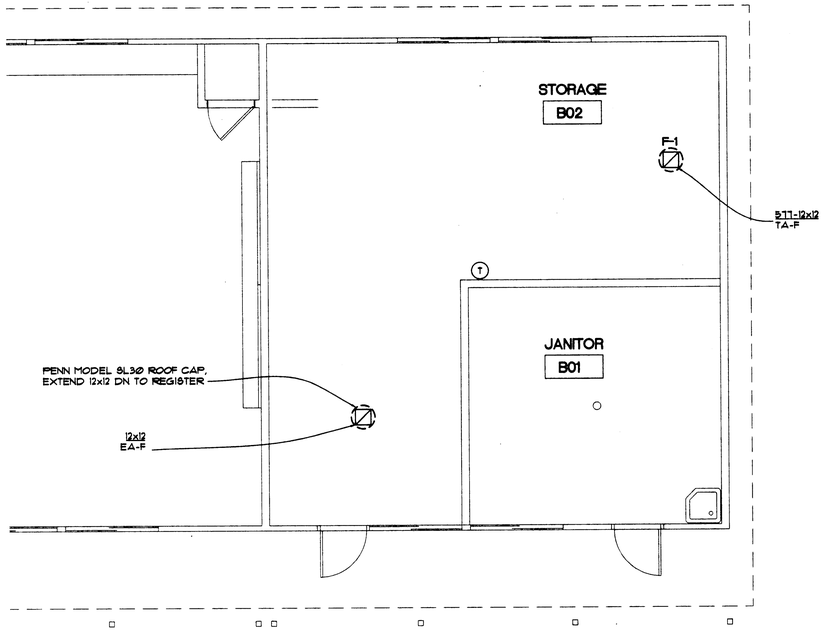

1 BUILDING B - MECHANICAL FLOOR PLAN
SCALE: 1/4" = 1'-0"

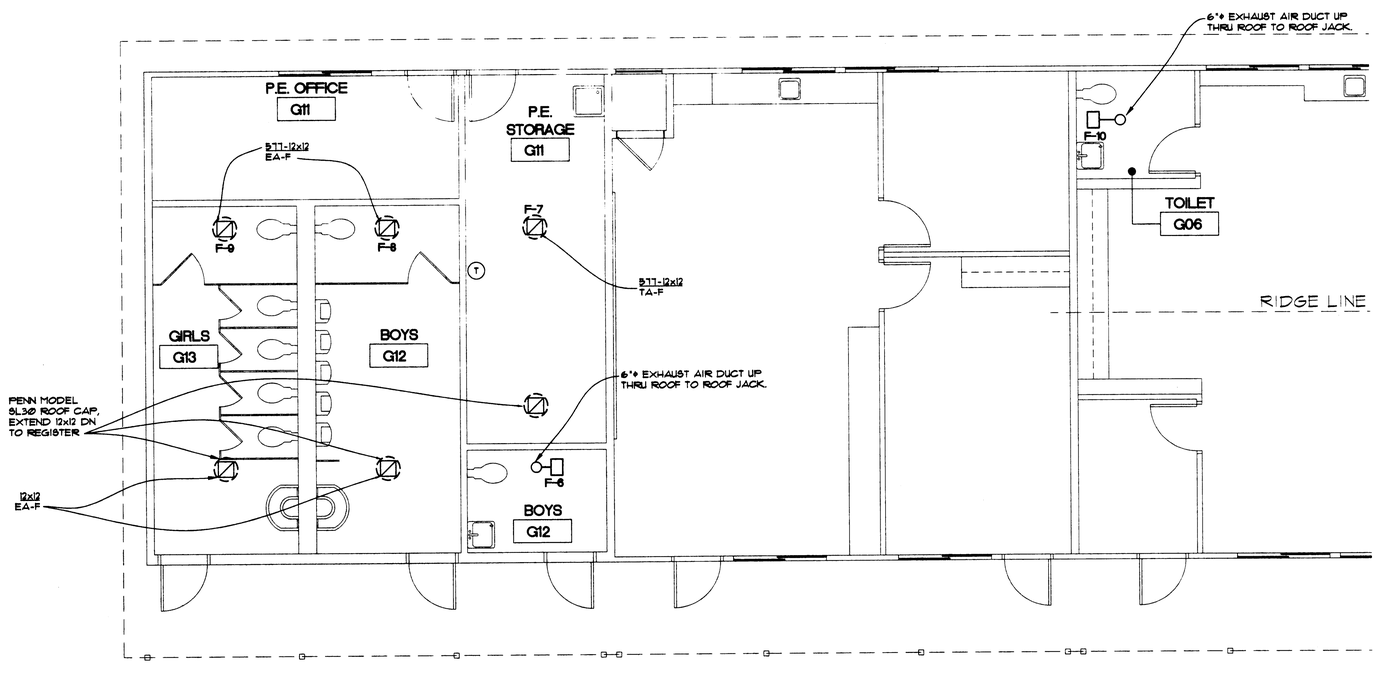

3 BUILDING G - MECHANICAL FLOOR PLAN
SCALE: 1/4" = 1'-0"

FAN SCHEDULE				
NO.	F-1, 2, 3, 4	F-5, 6	F-7, 8, 9	F-10
PENN MODEL NO.	DX11R	Z6H	DX11R	Z6H
MAX. SONES	6.6	3.1	6.6	3.1
TYPE	D	A	D	A
MATERIAL	ST	ST	ST	ST
DRIVE TYPE	DIRECT	DIRECT	DIRECT	DIRECT
CFM	577	122	577	122
EXT. STATIC PRESS. - IN. WC	0.25	0.375	0.25	0.375
APPROX. RPM	1550	1550	1550	1550
MOTOR HP (WATT)	1/7	(108)	1/7	(108)
ELECT. - V/Ø/HZ	120/1/60	120/1/60	120/1/60	120/1/60
OPER. WT. - LBS.	70	20	70	20
ACCESSORIES	BD,RC	BD,RJ	BD,RC	BD,RJ
REMARKS	2	1	2	1

TYPE:
A - CEILING MOUNTED VENTILATOR
B - ROOFTOP CENTRIFUGAL VENTILATOR

ACCESSORIES:
BD - BACKDRAFT DAMPER
RC - 14" HIGH PITCHED ROOF CURB
RJ - ROOF JACK

REMARKS
1 - CONTROLLED BY LIGHT SWITCH (USE PENN MODEL AM12 TIME DELAY SWITCH WHICH CONTROLS BOTH THE LIGHT AND THE FAN)
2 - CONTROL BY LINE VOLTAGE THERMOSTAT, MAKES ON RISE

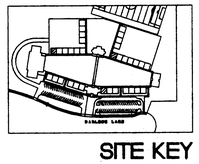

SITE KEY

HKA
Harlan Krusemark - Architect
4415 Cowell Road, Suite 230
Concord, CA 94521
Tel: 925.681.1905
Fax: 925.681.1906

HM MECHANICAL GROUP
2220 LIVINGSTON ST
SUITE 200
OAKLAND, CA
94606
510-281-5000 TEL
510-281-5003 FAX
HMSOCO@AOL.COM

Revisions Date

HAWKINS SCHOOL
(INCREMENT #2)

475 Darlene Lane
Tracy, CA 95377

Jefferson School District
7500 West Linne Road
Tracy, CA 95304

DSA FILE NO. 39-39
IDENTIFICATION STAMP
DIVISION OF THE STATE ARCHITECT
APPL 02 -102225
AC___ FLS___ SS___
DATE

Sheet Title:
BUIDINGS B, D, AND G

Printing Date / Purpose:
08/18/00 DSA APPROVAL

Scale: AS NOTED
Project Number: 9903.00
Sheet Number:
M2.5
of Sheets
FILE

COPYRIGHT © 2000 HARLAN KRUSEMARK - ARCHITECT (HKA) THESE DRAWINGS ARE PROPRIETARY DOCUMENTS OF HKA AND ARE NOT TO BE DISTRIBUTED, PUBLISHED OR REPRODUCED WITHOUT WRITTEN PERMISSION OF HKA.

101

FIXTURE SCHEDULE

TYPE	MANUFACTURER AND CATALOG NUMBER	LAMP QUANTITY AND TYPE/VOLTAGE	DESCRIPTION	MOUNTING DETAIL REFERENCE
A	COLUMBIA #5PS24-332G-RAA12.125-12EB277-MS11	3-F032T8/35 277V - U.O.N	2X4 LAMP LENSED LAY-IN W/REGRESSED WHITE ALUMINUM DOOR. SOLID STATE BALLASTS ARRANGED FOR INBOARD/OUTBOARD SWITCHING. MASTER/SLAVE 11' CABLE.	1/E0.5
A1	COLUMBIA #5PS24-332G-RAA12.125-EB277	3-F032T8/35 277V - U.O.N	2X4 LAMP LENSED LAY-IN W/REGRESSED WHITE ALUMINUM DOOR. SINGLE ELECTRONIC BALLAST.	1/E0.5
B	NOVA INDUSTRIES WM-1ID-2D-PERF-8'-EV(2) - WHP	3-F032T8/35 277V - U.O.N	DIRECT/INDIRECT MOUNTED TO SIDE OF STRUCTURE PER DETAIL. DIRECT/INDICATED LAMPS ON INDIVIDUAL BALLAST'S FOR SEPARATE SWITCHING. PERFORATED METAL HOUSING - POWDER COATED WHITE PAINT AS SELECTED BY ARCHITECT.	9/E0.5
C	PRESCOLITE #CFT832HEB-WTT2P	1-F32TT 277V - U.O.N	8" HORIZONTAL RECESSED COMPACT FLUORESCENT DOWNLIGHT WITH WHITE CONE AND PRISMATIC LENS. MULTIVOLT ELECTRONIC BALLAST.	3/E0.5
D	BETA-CALCO #67-0078-SN-2	2-F39BX/35 277V - U.O.N	31" DIA. SURFACE MOUNTED COMPACT FLUORESCENT. STEEL HOUSING WITH ACRYLIC CONE LENS.	2/E0.5
E	D'AC #d1200-IF32-277-WH-RB	1-F32TT 277V - U.O.N	15"X7½"X4" PERFORATED AND MACHINED ALUMINUM COMPACT FLUORESCENT WALL SCONCE. WHITE ACRYLIC DIFFUSER. SURFACE MOUNT ± 8'-0" AFF @ BLDG. L. SURFACE MOUNT ± 9'-2" AFF @ BLDG A	4/–
F	PRESCOLITE #CFT632EB-STF602	1-F32TT 277V - U.O.N	6" VERTICAL RECESSED COMPACT FLUORESCENT DOWNLIGHT WITH CLEAR ALZAK CONE. MULTIVOLT ELECTRONIC BALLAST.	3/E0.5
G	BETA-CALCO #67-3015-SN-2 (F39BX LAMPS)	8-F39BX/35 277V - U.O.N	PENDANT MOUNTED 44" DIA. COMPACT FLUORESCENT. STEEL HOUSING W/ ACRYLIC CONE LENS. PENDANT MOUNT SUCH THAT TOP OF FIXTURE IS 1'-0" BELOW BOTTOM CHORD OF JOIST AT BLDG. L, 14'-0" AFF AT BLDG A	5/E0.5
H	D'AC #d1023-IF32-277-WH	1-F32TT 277V - U.O.N	DIE-CAST OVAL ALUMINUM WALL SCONCE - 13-3/4"LX8-3/4"HX5-7/8"D. SURFACE MOUNTED AT HEIGHT AS NOTED ON PLANS. MOUNT HORIZONTALLY. WHITE GLOSS FINISH	4/–
J	LIGHTOLIER #6790BK226U	2 - 26W QUAD 4 PIN 120/277V	14" DIA. X 4"D SURFACE MOUNT FLUOR. WITH INJECTION-MOLDED POLYCARBONATE DIFFUSER - DAMP LABEL	2/E0.5
K	COLUMBIA #MWW4-232-EB8-277	2-F032T8/35	11" X 4' 2-LAMP LENSED INJECTION MOLDED WRAPAROUND, LENS SECURED WITH TORSION SPRINGS, SURFACE MOUNTED	2/E0.5
L	METALUMEN #05SCXUL4W4B	3-F032T8/35 277V - U.O.N	SUSPENDED DIRECT/INDIRECT AT 9'-4" AFF, MOTOROLA M2-RH-T8-1LL-B-277V BALLASTS.	5/E0.5
M	NOT USED			
N	HUBBELL #BL-400H6-HG22-ENC22-CXHLSO-EM-SLD1	1 - 400W MH & 1-250W QUARTZ 277V	400W MH HIGHBAY W/ENCLOSED GLASS REFLECTOR, AUXILLIARY QUARTZ SOCKET, SWITCH LEVEL DIMMING.	5/E0.5
O	HUBBELL #BL-400H6-HG22-ENC22-CXHLSO-QSS-SLD1	1 - 400W MH & 1-250W QUARTZ 277V	SAME AS 'N' EXCEPT QUARTZ RESTRIKE SOCKET AND RELAY.	5/E0.5
P	COLUMBIA #5PS24-332-F-RADR12-12EB8-277-MS11	3-F032T8/35 277V - U.O.N	2X4 RECESSED FLANGED TROFFER W/.140 DR ACRYLIC LENS. SOLID STATE BALLASTS ARRANGED FOR INBOARD OUTBOARD SWITCHING. MASTER/SLAVE 11' CABLE.	10/E0.5
P1	COLUMBIA #5PS24-332F-RADR12-EB8-277	3-F032T8 277V - U.O.N	2X4 RECESSED FLANGED TROFFER W/.140 DR ACRYLIC LENS. SINGLE 3 LAMP SOLID STATE BALLAST.	10/E0.5
Q	HALO #L642P/L929P & (6) L1802P	1 - 90W/PAR38SP PER TRACK HEAD 277V	SURFACE MOUNTED TWO CIRCUIT TRACT, WHITE FINISH.	2/E0.5
R	COLUMBIA #CS8132-EB8-277-CSWG4(2)	2-F032T8/35 277V - U.O.N	8' 2-LAMP FLUORESCENT STRIP WITH WIREGUARD	2/E0.5
S	COLUMBIA #MWW8-432-4ED8-277	4-F032T8/35 277V - U.O.N	16" X 8' 4-LAMP LENSED INJECTION MOLDED WRAPAROUND., SURFACE MTD. W/ LENS SECURED WITH TORSION SPRINGS.	2/E0.5
S1	KIM (FL1/70MH277(2) WITH TM2(1) ON 10' RSA POLE - WHP FINISH	1-70W MH	DUAL CAST ALUM. FLOOD LIGHTS WITH CROSSARM ON 10' ROUND STRAIGHT ALUM. POLE ALL ITEMS WHITE POWDER COAT FINISH	3/E0.0
S2	KIM #FM/NS3V5/150HPS277/WH-PWP/PRA12-4125FM/WH-P	1-150W HPS 277V	SEE DETAIL THIS SHEET, WALKWAY POLE LIGHT	3/E0.0
S3	KIM #FM/VLP21W5/250HPS277/WH-P/PRA20-4188FM/WH-P	1-250W HPS 277V	SEE DETAIL, THIS SHEET, PARKING AREA LIGHT STANDARD	1&2/E0.0
S4	KIM #FM/VLP21W3/250HPS277/WH-P/PRA20-4188FM/WH-P	1-250W HPS 277V	SEE DETAIL THIS SHEET, SAME AS TYPE 'S3' EXCEPT PHOTOMETRIC PATTERN	1&2/–
T	DAYBRITE #CD232W277	2-F032T8/35 277V	2-LAMP WALL MOUNTED FLUORESCENT W/INJECTION MOLDED CLEAR ACRYLIC LENS. WHITE HOUSING. SURFACE MOUNT TO WALL AT WALL/CEILING INTERSECTION.	5/–
U	COLUMBIA #LUN4-232-EB8-277-DR	2-F032T8/35 277V - U.O.N	SURFACE MOUNTED ENCLOSED AND GASKETED FIBERGLASS INDUSTRIAL WITH 100% DR ACRYLIC LENS.	2/E0.5
V	PRESCOLITE #EC2-5	FURN. W/FIXTURE 277V	SURFACE MOUNTED TWIN CYLINDER EMERGENCY LIGHT MOUNTED TO BOTTOM OF TRUSS	2/E0.5
W	NOT USED			
Y	COLUMBIA #5PS24-332-G-RAA12.125-EB8 277	3-F032T8/35 277V - U.O.N	2X4 RECESSED FLANGED TROFFER W/A12.125 LENS. SINGLE BALLAST.	10/E0.5
EM	CONCEALITE #F3-20-2-NS-RT	2-20W MR16 NFL 277V - U.O.N	RECESSED TWIN MR16 SELF-CONTAINED EMERGENCY FIXTURE WITH REMOTE TEST SWITCH. MOUNT AT HEIGHT INDICATED ON PLANS.	11/E0.5

GENERAL ELECTRICAL NOTES

1) ELECTRICAL CONTRACTOR IS TO PROVIDE LABOR, MATERIALS, TRANSPORTATION, EQUIPMENT, RELATED HAND TOOLS, SPECIAL AND OCCASIONAL SERVICES TO CONSTRUCT AND INSTALL THE COMPLETE ELECTRICAL SYSTEM AS SPECIFIED AND SHOWN ON THE PLANS.

2) MOUNTING HEIGHTS SHOWN (I.E. +48") ARE FROM FINISHED FLOOR TO CENTERLINE OUTLET. ALL MOUNTING HEIGHTS SHALL BE AS SHOWN ON SYMBOL LIST UNLESS OTHERWISE NOTED ON DRAWINGS.

3) BONDING JUMPERS SHALL BE INSTALLED TO INSURE CONTINUITY WHERE CONDUIT CONNECTIONS AT CONCENTRIC KNOCKOUTS ARE TO SERVE AS A GROUND.

4) PROVIDE GREEN THWN COPPER GROUND WIRE FROM PANELBOARD GROUND BUS TO ALL MECHANICAL EQUIPMENT.

5) THE ELECTRICIAN SHALL CHECK THE TIGHTNESS OF ALL NEW PANELBOARD BUSES AND CIRCUIT BREAKER LUGS. COMPLETELY VACUUM AND CLEAN INTERIOR OF EQUIPMENT PRIOR TO PLACING SERVICE INTO OPERATION.

6) ALL EQUIPMENT SHALL BE U.L. LISTED AND INSTALLED AS PER LISTING OR LABELING (I.E. MAX. FUSE SIZES MEAN FUSE PROTECTION REQUIRED).

7) REFER TO ARCHITECTURAL DRAWINGS FOR ACTUAL LAYOUT OF ALL LIGHTING FIXTURES IN CEILING AND FOR EXACT LOCATION AND ORIENTATION OF ALL OTHER ELECTRICAL OUTLETS.

8) ALL ELECTRICAL CONDUIT AND ELECTRICAL EQUIPMENT SHALL BE BRACED OR ANCHORED TO RESIST HORIZONTAL FORCES AS REQUIRED BY SECTION 1632A.2 AND TABLE 16A-O, PART B, TITLE 24, CALIFORNIA CODE OF REGULATIONS, PART 2. WHERE ANCHORAGE DETAILS ARE NOT SHOWN ON DRAWINGS, THE FIELD INSTALLATION SHALL BE SUBJECT TO THE APPROVAL OF THE STRUCTURAL ENGINEER.

9) COORDINATE LOCATION AND ELECTRICAL REQUIREMENTS OF ALL EQUIPMENT REQUIRING ELECTRICAL HOOKUP WITH CONTRACTOR RESPONSIBLE FOR PROVIDING SAID EQUIPMENT AND THE MANUFACTURER DATA SHEETS.

10) UPON COMPLETION OF THE INSTALLATION OF THE FIRE PROTECTIVE SIGNALING EQUIPMENT, A SATISFACTORY TEST OF THE ENTIRE SYSTEM SHALL BE MADE IN THE PRESENCE OF THE LOCAL FIRE AUTHORITY WITH THE DSA INSPECTOR OF RECORD (IOR).

11) FLUORESCENT LIGHT FIXTURES SHALL HAVE CERTIFIED LUMINAIRE/BALLASTS PER STATE OF CALIFORNIA BUILDING ENERGY STANDARDS 2-5314(a).

14) PENETRATIONS OF FIRE WALLS, CEILINGS OR FLOORS SHALL COMPLY WITH C.B.C. REQUIREMENTS. PROVIDE APPROVED U.L. SYSTEM PER SECTION 714, 1998 T24 PART 2 OF CBC.

15) ELECTRICAL CONTRACTOR SHALL REVIEW MECHANICAL AND PLUMBING CONTRACT DRAWINGS AND VERIFY ALL MECHANICAL EQUIPMENT LOCATIONS, MOTOR SIZES AND CONTROL WIRING REQUIREMENTS WITH MECHANICAL CONTRACTOR PRIOR TO INSTALLATION OF ELECTRICAL CONNECTIONS.

16) RECEPTACLES SHALL NOT BE INSTALLED BACK TO BACK AND SHALL BE SPACED 24" APART. HORIZONTAL.

17) PROVIDE AN ISOLATED GROUND WIRE IN ADDITION TO NORMAL EQUIPMENT GROUND IN ALL COMPUTER DEDICATED CIRCUITS.

18) ALL CONTROL DEVICES TO BE USED BY THE OCCUPANT OF THE ROOM OR AREA SHALL BE INSTALLED AT A MINIMUM OF 36" C/L, TO A MAXIMUM OF 48" C/L FROM THE FINISHED FLOOR, UNLESS OTHERWISE NOTED.

19) ELECTRICAL DRAWINGS ARE DIAGRAMMATIC AND ALTHOUGH THE SIZE AND LOCATIONS OF EQUIPMENT IS SHOWN TO SCALE WHEREVER POSSIBLE, CONTRACTOR SHALL MAKE USE OF MANUFACTURER'S OR OWNER'S DATA AVAILABLE AND/OR VERIFY DATA IN THE FIELD FOR PROVIDING AND INSTALLING CORRECT CABLE LENGTHS.

20) A TYPEWRITTEN DIRECTORY SHALL BE MOUNTED BEHIND GLASS OR PLASTIC ON INSIDE OF PANEL DOOR, GIVING CIRCUIT NUMBER AND COMPLETE DESCRIPTION OF ALL OUTLETS CONTROLLED BY EACH CIRCUIT BREAKER.

21) MOUNT LOW LEVEL EXIT LIGHTS WITH BOTTOM OF FIXTURE AT 8" ABOVE FINISH FLOOR. LOW LEVEL EXIT LIGHTS TO COMPLY WITH UL NO. 924.

22) ALL RECEPTACLES AND SWITCHES SHALL BE LABELED ON THE FRONT AND BACK OF FACE PLATE WITH "BROTHERS" LABELING MACHINE, INDICATING THE PANEL AND CIRCUIT NUMBERS. CHARACTERS TO BE 3/8" HIGH MINIMUM.

23) ALL IN-FLOOR DEVICE OUTLET BOXES SHALL BE CAST IRON, FULLY ADJUSTABLE TYPE WITH BRASS COVER PLATE FOR EITHER CARPET OR TILE ACTIVATION'S AS APPLICABLE.

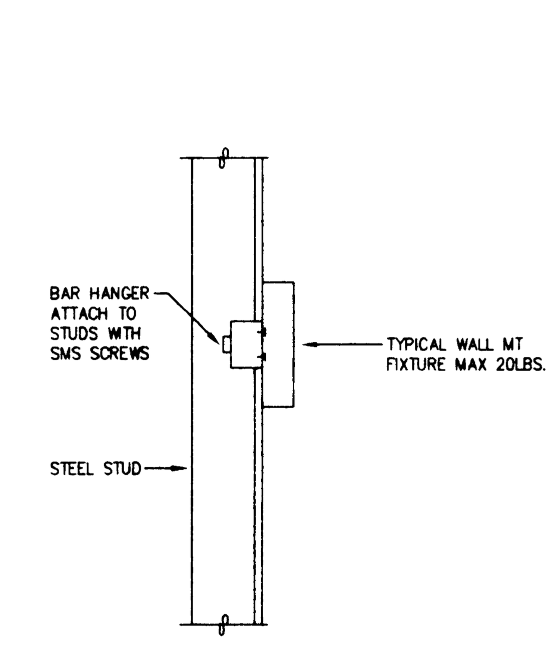

5 FIXTURE TYPES 'E','H' WALL MT FIXTURE
NOT TO SCALE

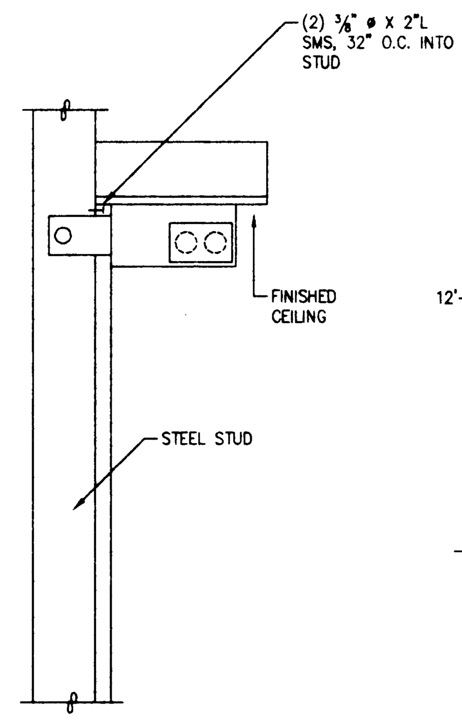

4 FIXTURE TYPES 'T' MTG DETAIL
NOT TO SCALE

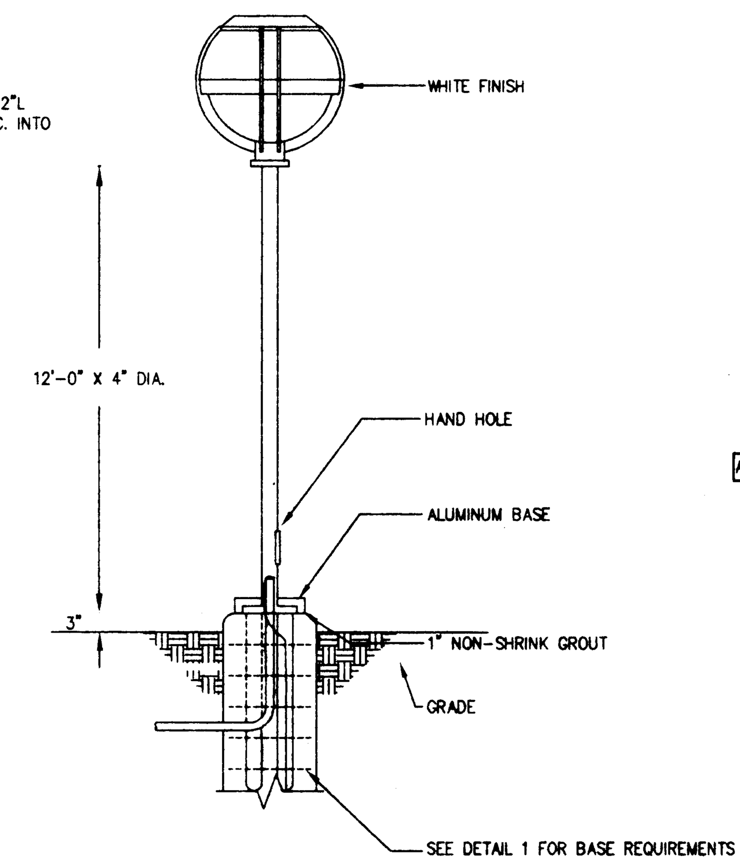

3 TYPE 'S2' FIXTURE DETAIL
NOT TO SCALE

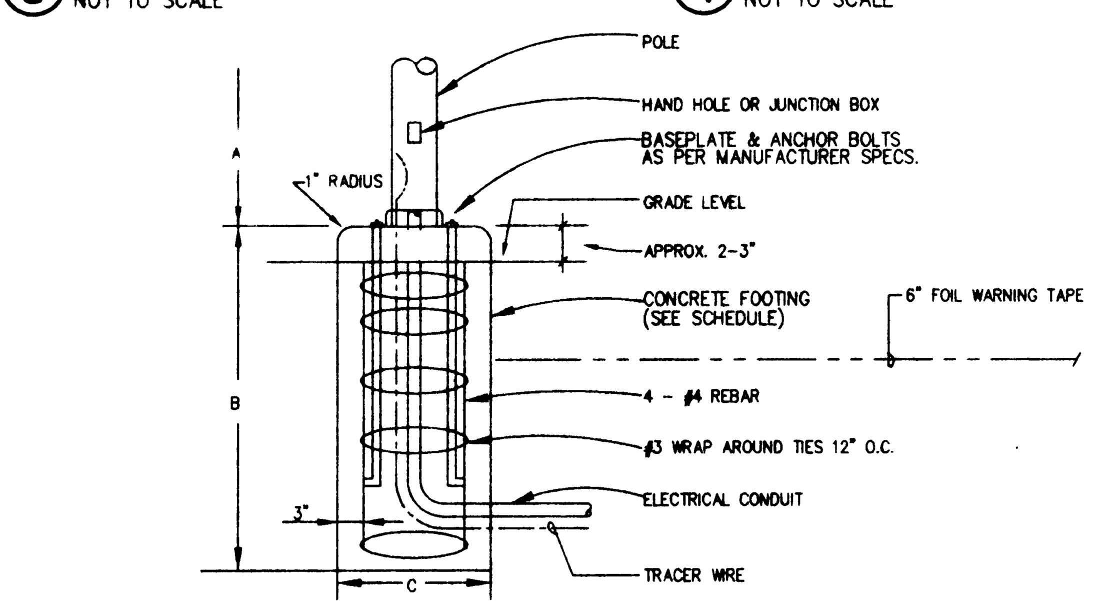

P1	A	B	C
MAXIMUM WIND PRESSURE	POLE LENGTH	FOOT DEPTH BELOW GRADE	FOOT DIAMETER
29.8#	0'-0"--15'-0"	3'-0"	1'-6"
70.5#	15'-0"--20'-0"	4'-0"	2'-0"

1 'S2','S3', AND 'S4' POLE BASE DETAIL
NOT TO SCALE

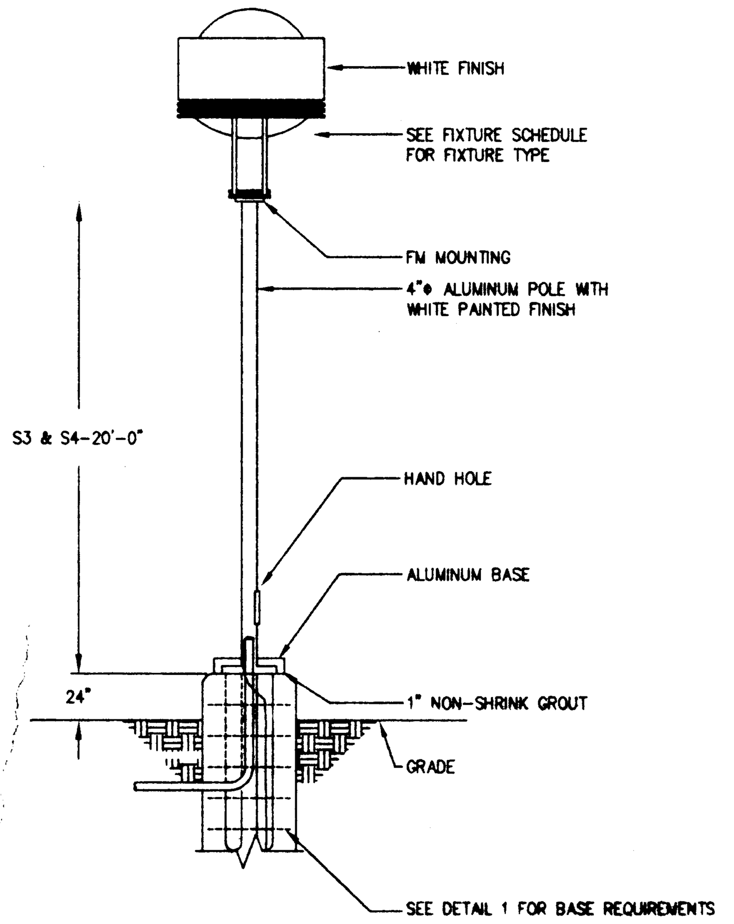

2 TYPE 'S3', AND 'S4' FIXTURE DETAIL
NOT TO SCALE

FIXTURE SCHEDULE CONTINUED

TYPE	MANUFACTURER AND CATALOG NUMBER	LAMP QUANTITY AND TYPE	DESCRIPTION
(exit sign symbol)	PRESCOLITE #LEDBG1NBW/70022GAW	LED 277V	DIECAST WHITE EXIT SIGN WITH GREEN LED'S, STENCIL FACE PLATE, GREEN LETTERS. UNIVERSAL MOUNT WT: 10 LBS.

ELECTRICAL SYMBOL LIST

SYMBOL	DESCRIPTION
	FLUORESCENT LIGHT FIXTURE AND OUTLET - SEE FIXTURE SCHEDULE
	SURFACE LIGHT FIXTURE - SEE FIXTURE SCHEDULE
	WALL MOUNTED LIGHT FIXTURE - SEE FIXTURE SCHEDULE
XA	EXIT SIGN WITH LETTER INDICATING TYPE - SEE FIXTURE SCHEDULE
S_a	1PST LIGHT SWITCH +48" U.O.N., LETTER DENOTES OUTLET CONTROLLED
S_3	3-WAY LIGHT SWITCH, +48" U.O.N.
S_P	1PST SWITCH WITH PILOT LIGHT - LIT WHEN OFF. MOUNTED ADJACENT TO ATTIC ACCESS HATCH.
	20A, 125V, 3W GROUNDING TYPE, FOURPLEX RECEPTACLE, +18" U.O.N.
IG	20A, 125V, 3W GROUNDING TYPE DUPLEX RECEPTACLE WITH ISOLATED GROUND, +18" U.O.N.
	GFI RECEPTACLE, +18" U.O.N.
	20A, 125V, 3W GROUNDING TYPE DUPLEX RECEPTACLE, +18" U.O.N.
	20A, 125V, 3W GROUNDING TYPE DUPLEX RECEPTACLE, MOUNTED FLUSH IN-FLOOR
	SPECIAL PURPOSE RECEPTACLE MOUNTED FLUSH IN FLOOR
IG	MULTI-OUTLET SURFACE RACEWAY WITH OUTLETS AS INDICATED ON DRAWINGS COMPUTER OUTLET DUPLEX RECEPTACLE - ISOLATED GROUND TYPE
	TELEPHONE OUTLET +18" U.O.N. WITH 1"MT TO ACCESSIBLE CEILING SPACE, U.O.N.
	DATA OUTLET +18" U.O.N. WITH ¾"MT TO ACCESSIBLE CEILING SPACE, U.O.N.
	TELEPHONE OUTLET MOUNTED FLUSH IN-FLOOR
	DATA OUTLET MOUNTED FLUSH IN-FLOOR
	COMBINATION DATA AND POWER OUTLET MOUNTED FLUSH IN FLOOR. STEEL CITY #642 WITH (2) P-64DSAL/(1) 009-4-710-2/(1) 009-5E-110-A/(1) 009-5E-110-B
TV	CABLE TELEVISION OUTLET AT +80" WITH ¾"MT TO SDTC U.O.N.
IC	INTERCOM TELEPHONE OUTLET, DEVICE, INTERCOM HAND SET +48" U.O.N.
	INTERCOM SPEAKER/CLOCK - SEE ARCHITECTURAL ELEVATIONS FOR MOUNTING HEIGHT(S)
WP	EXTERIOR WEATHERPROOF SPEAKER - HEIGHTS NOTED ON PLANS
J	JUNCTION BOX, CEILING OR WALL MOUNTED - SIZED PER CODE
RPS	REMOTE POWER SUPPLY - FIRE ALARM SYSTEM
FACP	FIRE ALARM CONTROL PANEL
FATC	FIRE ALARM TERMINAL CABINET
F	FIRE ALARM MANUAL PULL STATION, +48" U.O.N.
WF	FIRE ALARM MONITOR MODULE TO MONITOR WATER FLOW ALARM, F.B.O.
TS	FIRE ALARM MONITOR MODULE TO MONITOR TAMPER SWITCH, F.B.O.
AMM2 M	FIRE ALARM MONITOR MODULE
SD	CEILING MOUNTED SMOKE DETECTOR
HD	HEAT DETECTOR MOUNTED ABOVE CEILING
HD	HEAT DETECTOR MOUNTED ON CEILING
H	HORN/STROBE - WHEELOCK 'AS' SERIES - MEDIUM SOUND LEVEL
M	MINI HORN/STROBE, +80" A.F.F. - WHEELOCK 'AS' SERIES
WP H WP	EXTERIOR HORN, WEATHERPROOF AT 90" A.F.F. - WHEELOCK 'AS ' SERIES
L	MINI HORN, +80" A.F.F. - WHEELOCK 'AS' SERIES, LOW SOUND LEVEL
S	SYNCRONIZABLE STROBE, +80 A.F.F., CANDELLA RATING AS NOTED, WHEELOCK SERIES 'RSS'
S	FIRE ALARM CEILING MOUNTED SPEAKER
EOL	END OF LINE RESISTOR
	DISCONNECT SWITCH - FUSED AS REQUIRED, WEATHERPROOF FOR OUTDOORS, SIZED PER NEC FOR COMPONENT OR DEVICE SERVED
	MOTOR CONNECTION
S_T	THERMAL OVERLOAD SWITCH - MOUNT IN W.P. J-BOX WITH W.P. COVER PLATE WHERE MOUNTED OUTDOORS
S_2	TWO POLE SINGLE THROW SWITCH, +48" U.O.N
S_M	MANUAL MOTOR STARTING SWITCH, HORSE POWER RATED WITH OVERLOADS
	BRANCH CIRCUIT CONDUIT CONCEALED IN WALL OR CEILING
	BRANCH CIRCUIT CONDUIT CONCEALED UNDER FLOOR OR UNDERGROUND
	HOMERUN TO PANELBOARD OR OTHER TERMINATION POINT
	STUB CONDUIT TO ACCESSIBLE CEILING SPACE
	ANY BRANCH CIRCUIT CONDUIT SHALL BE MINIMUM ¾"C -2#12 UNLESS OTHERWISE NOTED OR INDICATED. FOR A GREATER NUMBER OF #12 WIRES: (¾"C - 3#12) ETC. FOR WIRE SIZES OTHER THAN #12: (#8 - 3#8 IN CODE SIZE CONDUIT) ETC.
GFI	GROUND FAULT INTERRUPTER
IG	ISOLATED GROUND
MT	EMPTY CONDUIT WITH PULL CORD - MINIMUM ¾"
N.I.C.	NOT IN CONTRACT
WP	WEATHERPROOF
U.O.N.	UNLESS OTHERWISE NOTED
A/2/32	FIXTURE TAG - LETTER DENOTES TYPE, NUMBERS INDICATE LAMP QUANTITY AND WATTAGE
1/E-1	REFERS TO DETAIL NO. 1 ON DRAWING E-1
1	NUMBERED ELECTRICAL NOTE
D	DATA SYSTEM CONDUIT - ¾"C
D	DATA SYSTEM HOMERUN TO DATA SYSTEM TERMINAL CABINET - 1"C
A	ALARM SYSTEM CONDUIT HOMERUN TO INTRUSION ALARM TERMINAL CABINET '1ATC' 1"C - SEE 'SIGNAL AND DATA SYSTEM RISER DIAGRAM' SHEET E0.6
A	ALARM SYSTEM CONDUIT STUBBED INTO ACCESSIBLE CEILING SPACE - 3/4" UNLESS A HOMERUN, THEN 1"C
A	ALARM SYSTEM CONDUIT BETWEEN DEVICES - 3/4"C
MD	JUNCTION BOX FLUSH IN WALL WITH MOTION DETECTOR, +7'-6" U.O.N. UNLESS OTHERWISE INDICATED, PROVIDE A ½" CONDUIT STUBBED INTO ACCESSIBLE CEILING SPACE.
	INTRUSION ALARM DOOR CONTACT PROVISIONS PER 'INTRUSION ALARM CONDUIT DETAIL @ DOORS', SHEET E0.6
IACP	INTRUSION ALARM CONTROL PANEL - ELECTRICAL POWER CONNECTIONS BY THIS CONTRACTOR
IAKP	INTRUSION ALARM KEY PAD. THIS CONTRACTOR TO PROVIDE CONDUIT CONNECTIONS TO KEY PAD JUNCTION BOX
5	5 GANG JUNCTION BOX FOR AV CONNECTION. +24" AFF U.O.N. PROVIDE BLANK COVERPLATE.

HKA
Harlan Krusemark - Architect
4415 Cowell Road, Suite 230
Concord, CA 94521
Tel: 925.681.1905
Fax: 925.681.1906

LICENSED ARCHITECT HARLAN KRUSEMARK No. C23833 Exp. 9/30/01 STATE OF CALIFORNIA

WHM INCORPORATED
Engineering Consultants
1605 School Street
Moraga, CA 94556
Tel (925)376-2902 • Fax (925)376-2904
99104

REGISTERED PROFESSIONAL ENGINEER RICHARD A. MADDEN No. E 8626 Exp. 9-30-02 ELECTRICAL STATE OF CALIFORNIA

Revisions | Date

HAWKINS SCHOOL
Darlene Lane
Tracy, CA 95376

Jefferson School District
7500 West Linne Road
Tracy, CA 95376

DSA FILE NO. 39-39
IDENTIFICATION STAMP DIVISION OF THE STATE ARCHITECT
APPL.02 -102225
AC FLS SS
DATE AUG 2 4 2000

Sheet Title:
ELECTRICAL SYMBOL LIST GENERAL NOTES, FIXTURE SCHEDULE, AND DETAILS

Printing Date / Purpose:
4/21/00 DSA REVIEW
8/18/00 DSA APPROVAL

Scale: NONE
Project Number: 9903.00
Sheet Number:
E0.0
- of Sheets
FILE: 99104E00.dwg

08/21/00 11:15:05 AM \\SERVER\CAD\1999\99104\99104E00.DWG

COPYRIGHT ©2000 HARLAN KRUSEMARK - ARCHITECT (HKA) THESE DRAWINGS ARE PROPRIETARY DOCUMENTS OF HKA AND ARE NOT TO BE DISTRIBUTED, PUBLISHED OR REPRODUCED WITHOUT WRITTEN PERMISSION OF HKA.

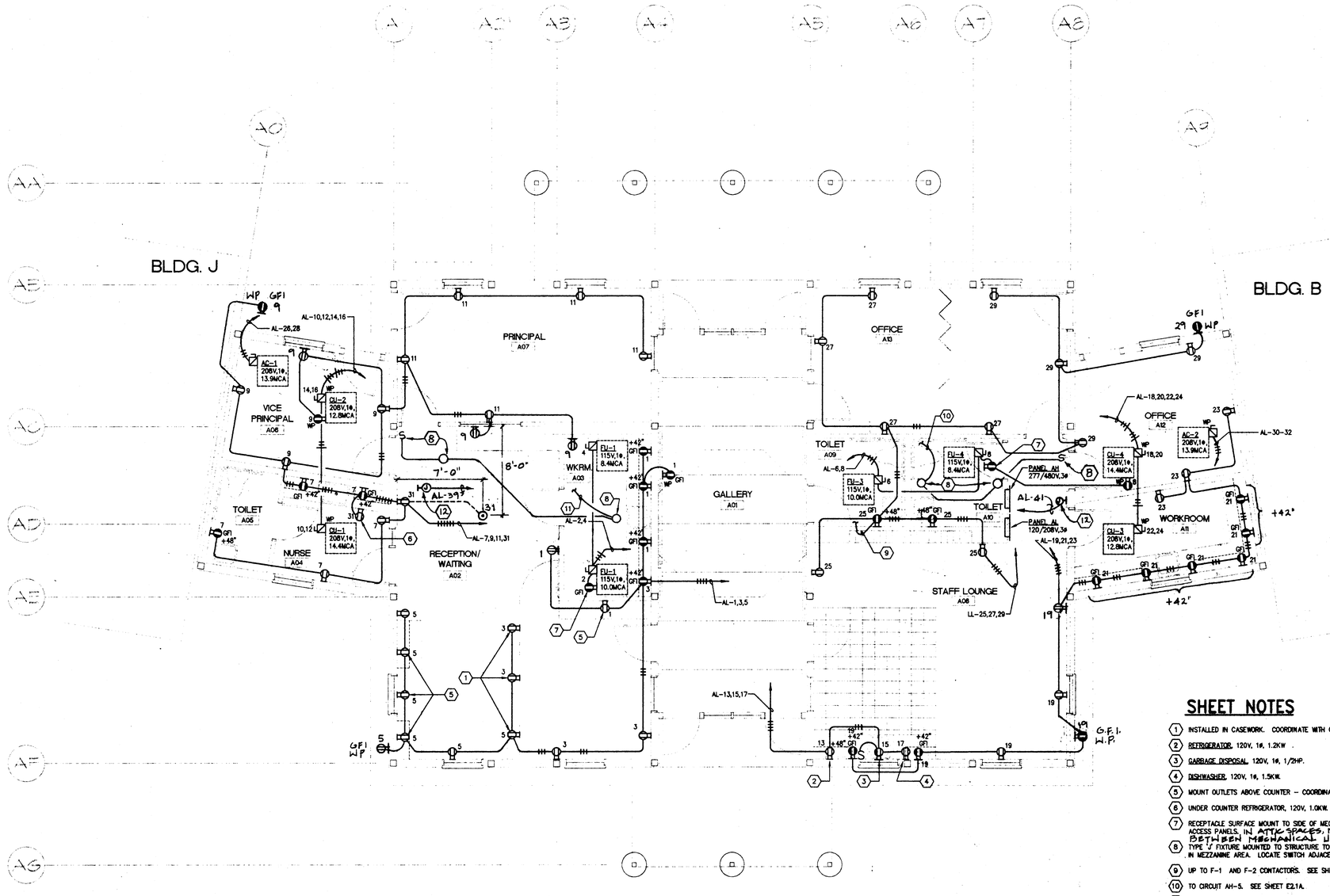

SHEET NOTES

1. INSTALLED IN CASEWORK. COORDINATE WITH CASEWORK FABRICATOR.
2. REFRIGERATOR, 120V, 1ø, 1.2KW .
3. GARBAGE DISPOSAL, 120V, 1ø, 1/2HP.
4. DISHWASHER, 120V, 1ø, 1.5KW.
5. MOUNT OUTLETS ABOVE COUNTER – COORDINATE WITH INTERIOR ELEVATIONS.
6. UNDER COUNTER REFRIGERATOR, 120V, 1.0KW.
7. RECEPTACLE SURFACE MOUNT TO SIDE OF MECHANICAL UNIT CLEAR OF REMOVABLE ACCESS PANELS. IN ATTIC SPACES, MOUNT ON WALL CENTERED BETWEEN MECHANICAL UNITS.
8. TYPE 'V' FIXTURE MOUNTED TO STRUCTURE TO LIGHT MECHANICAL EQUIPMENT IN MEZZANINE AREA. LOCATE SWITCH ADJACENT TO ATTIC ACCESS DOOR.
9. UP TO F-1 AND F-2 CONTACTORS. SEE SHEET E2.1A.
10. TO CIRCUIT AH-5. SEE SHEET E2.1A.
11. TO CIRCUIT AH-1. SEE SHEET E2.1A.
12. JUNCTION BOX FOR ELECTRIC WATER HEATER CONNECTION. 1500 WATTS @ 120V.

1 ELECTRICAL BLDG 'A': ADMIN POWER PLAN

SCALE: 1/4" = 1'-0"

TRUE NORTH

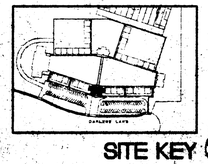

SITE KEY

HKA
Harlan Krusemark - Architect
4415 Cowell Road, Suite 230
Concord, CA 94521
Tel: 925.681.1905
Fax: 925.681.1906

REGISTERED ARCHITECT HARLAN KRUSEMARK No. C26633 Exp. 9/30/00 STATE OF CALIFORNIA

WHM INCORPORATED
Engineering Consultants
1605 School Street
Moraga, CA 94556
Tel (925)376-2902 • Fax (925)376-2884
98104

REGISTERED PROFESSIONAL ENGINEER RICHARD K. WHITE No. E-18706 Exp. 6-30-02 ELECTRICAL STATE OF CALIFORNIA

Revisions	Date
△	
△	
△	
△	
△	
△	

HAWKINS SCHOOL

Darlene Lane
Tracy, CA 95376

Jefferson School District
7500 West Linne Road
Tracy, CA 95376

DSA FILE NO. 39-99
IDENTIFICATION STAMP
DIVISION OF THE STATE ARCHITECT
APPL.NO. -102225
AC___ FLS RPK SR. RCT
DATE AUG 2 4 2000

Sheet Title:
ELECTRICAL BUILDING A:
ADMINISTRATION
POWER PLAN

Printing Date / Purpose:
4/21/00 DSA REVIEW
8/18/00 DSA APPROVAL

Scale: 1/4" = 1'-0"
Project Number: 9903.00
Sheet Number:

E2.1B

of Sheets

FILE: 98104E2-1B.dwg

10:13 am 01/24/00
08/28/00 7:31:32 PM \\SERVER\CAD\1999\98104\98104E2-1B.DWG

COPYRIGHT © 2000 HARLAN KRUSEMARK - ARCHITECT (HKA) THESE DRAWINGS ARE PROPRIETARY DOCUMENTS OF HKA AND ARE NOT TO BE DISTRIBUTED, PUBLISHED OR REPRODUCED WITHOUT WRITTEN PERMISSION OF HKA.

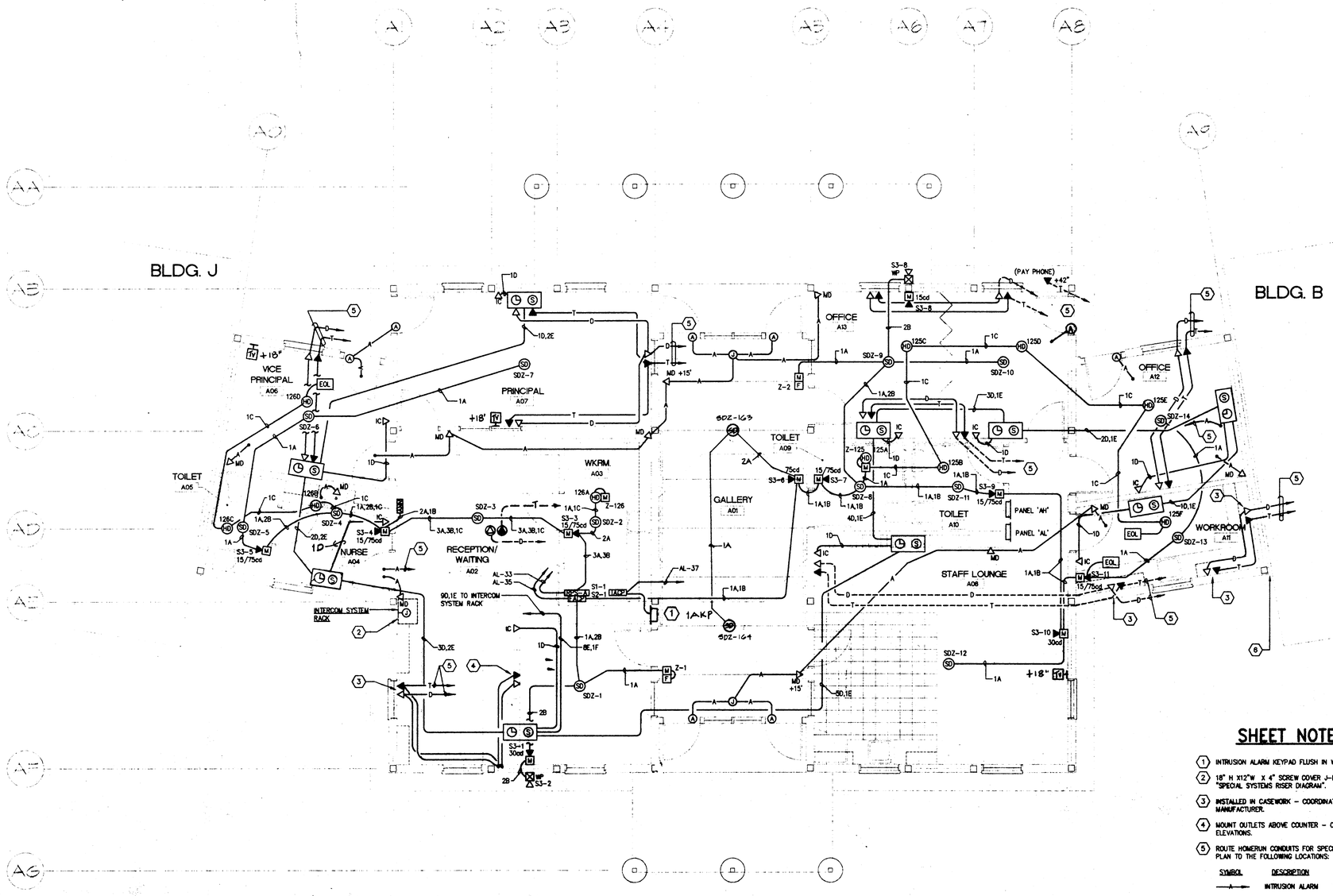

1 ELECTRICAL BLDG 'A': ADMIN SIGNAL PLAN 5

SCALE: 1/4" = 1'-0"

TRUE NORTH

SHEET NOTES

1. INTRUSION ALARM KEYPAD FLUSH IN WALL.
2. 18" H X12"W X 4" SCREW COVER J-BOX FLUSH IN WALL AT +24". SEE "SPECIAL SYSTEMS RISER DIAGRAM".
3. INSTALLED IN CASEWORK – COORDINATE WITH CASEWORK MANUFACTURER.
4. MOUNT OUTLETS ABOVE COUNTER – COORDINATE WITH INTERIOR ELEVATIONS.
5. ROUTE HOMERUN CONDUITS FOR SPECIAL SYSTEM SHOWN ON THIS PLAN TO THE FOLLOWING LOCATIONS:

SYMBOL	DESCRIPTION	TERMINATION POINT
—A—	INTRUSION ALARM	'1ATC' BUILDING B (E2.5C)
—T—	TELEPHONE	TELE. TERM. BOARD BUILDING B (E2.5C)
—D—	DATA	TELE. TERM. BOARD BUILDING B (E2.5C)

6. PROVIDE EXPANSION FITTINGS ON ALL CONDUITS CROSSING BUILDING EXTERIOR WALL LINE.

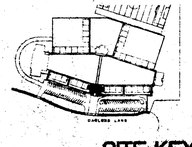

SITE KEY

HKA
Harlan Kruisemark - Architect
4415 Cowell Road, Suite 230
Concord, CA 94521
Tel: 925.681.1905
Fax: 925.681.1906

LICENSED ARCHITECT HARLAN KRUISEMARK No. C23883 Exp. 1/30/01 STATE OF CALIFORNIA

WHM INCORPORATED
Engineering Consultants
1605 School Street
Moraga, CA 94556
Tel (925)376-2902 • Fax (925)376-2904
99104

REGISTERED PROFESSIONAL ENGINEER RICHARD A. BRUNI No. E-14884 Exp. 9-30-00 ELECTRICAL STATE OF CALIFORNIA

Revisions	Date

HAWKINS SCHOOL

Darlene Lane
Tracy, CA 95376

Jefferson School District
7500 West Linne Road
Tracy, CA 95376

DSA FILE NO. 39-32
IDENTIFICATION STAMP
DIVISION OF THE STATE ARCHITECT
APPLIC #102225
AC ___ FLS RAK SB
DATE AUG 2 4 2000

Sheet Title:
ELECTRICAL BUILDING A:
ADMINISTRATION
FIREALARM AND
SIGNAL PLAN

Printing Date / Purpose:
4/21/00 DSA REVIEW
8/18/00 DSA APPROVAL

Scale: 1/4" = 1'-0"
Project Number: 9903.00
Sheet Number:

E2.1C

COPYRIGHT © 2000 HARLAN KRUISEMARK – ARCHITECT (HKA). THESE DRAWINGS ARE PROPRIETARY DOCUMENTS OF HKA AND ARE NOT TO BE DISTRIBUTED, PUBLISHED OR REPRODUCED WITHOUT WRITTEN PERMISSION OF HKA.

5:40 pm 08/18/00
08/20/00 7:35:32 PM \\SERVER\CADD\9903\99104\99104E2-1C.DWG

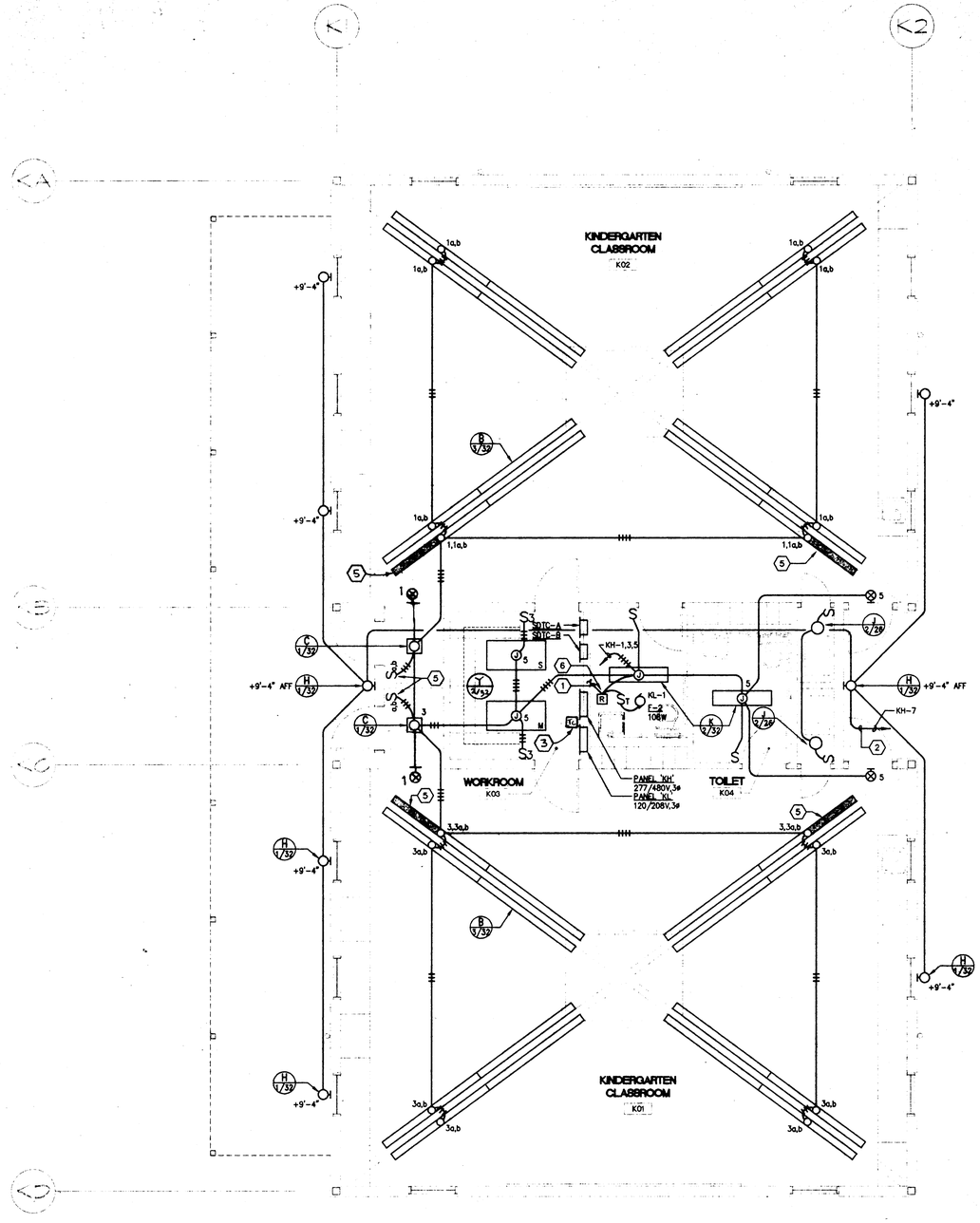

1 ELECTRICAL BLDG 'K': KINDERGARTEN LIGHTING PLAN

SCALE: 1/4" = 1'-0"

SHEET NOTES

1. DOWN TO RECEPTACLE. SEE SHEET E2.2B.
2. TO CIRCUIT INDICATED THROUGH PHOTOCELL STUBBED ABOVE ROOF. SEE 'EXTERIOR LIGHTING CONTROL DIAGRAM'.
3. EXTERIOR LIGHTING TIME CLOCK – MOUNT FLUSH IN WALL BETWEEN AND ABOVE PANEL BOARDS. TORK #EW101-3/FLG. SEE DETAIL ON SHEET E0.5.
4. TWO SWITCHES, 'a' AND 'b'. CONNECT 'a' TO CONTROL DOWNLIGHT PORTION OF FIXTURE AND 'b' TO CONTROL UPLIGHT PORTION.
5. PROVIDE BODINE #B-60 BATTERY PACK TO OPERATE TWO DOWN LIGHTS IN THIS SECTION OF FIXTURE TYPE B.
6. 1PST 20AMP CONTACTOR WITH 277V CONTROL COIL IN NEMA 1 BOX IN ATTIC SPACE.

HKA
Harlan Kruisemark - Architect
4415 Cowell Road, Suite 230
Concord, CA 94521
Tel: 925.681.1906
Fax: 925.681.1906

LICENSED ARCHITECT HARLAN KRUISEMARK No. C13883 Exp. 6/30/01 STATE OF CALIFORNIA

WHM INCORPORATED
Engineering Consultants
1605 School Street
Moraga, CA 94556
Tel (925)376-2902 • Fax (925)376-2984

99104

REGISTERED PROFESSIONAL ENGINEER DAVID K. WHITE No. E-13883 Exp. 6-30-02 ELECTRICAL STATE OF CALIFORNIA

Revisions Date

HAWKINS SCHOOL

Darlene Lane
Tracy, CA 95376

Jefferson School District
7500 West Linne Road
Tracy, CA 95376

DSA FILE NO. 39-02
IDENTIFICATION STAMP
DIVISION OF THE STATE ARCHITECT
APPLIC -102225
AC FLS DWK BB C C
DATE AUG 2 4 2000

Sheet Title:
ELECTRICAL BUILDING 'K'
KINDERGARTEN
LIGHTING PLAN

Printing Date / Purpose:
4/21/00 DSA REVIEW
8/18/00 DSA APPROVAL

Scale: 1/4" = 1'-0"
Project Number: 9903.00
Sheet Number:

E2.2A

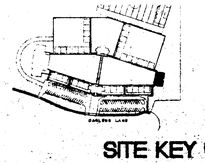

SITE KEY

COPYRIGHT © 2000 HARLAN KRUISEMARK - ARCHITECT (HKA). THESE DRAWINGS ARE PROPRIETARY DOCUMENTS OF HKA AND ARE NOT TO BE DISTRIBUTED, PUBLISHED OR REPRODUCED WITHOUT WRITTEN PERMISSION OF HKA.

08/28/00 7:53:12 PM \\SERVER\CAD\1999\99104\991042-2A.DWG

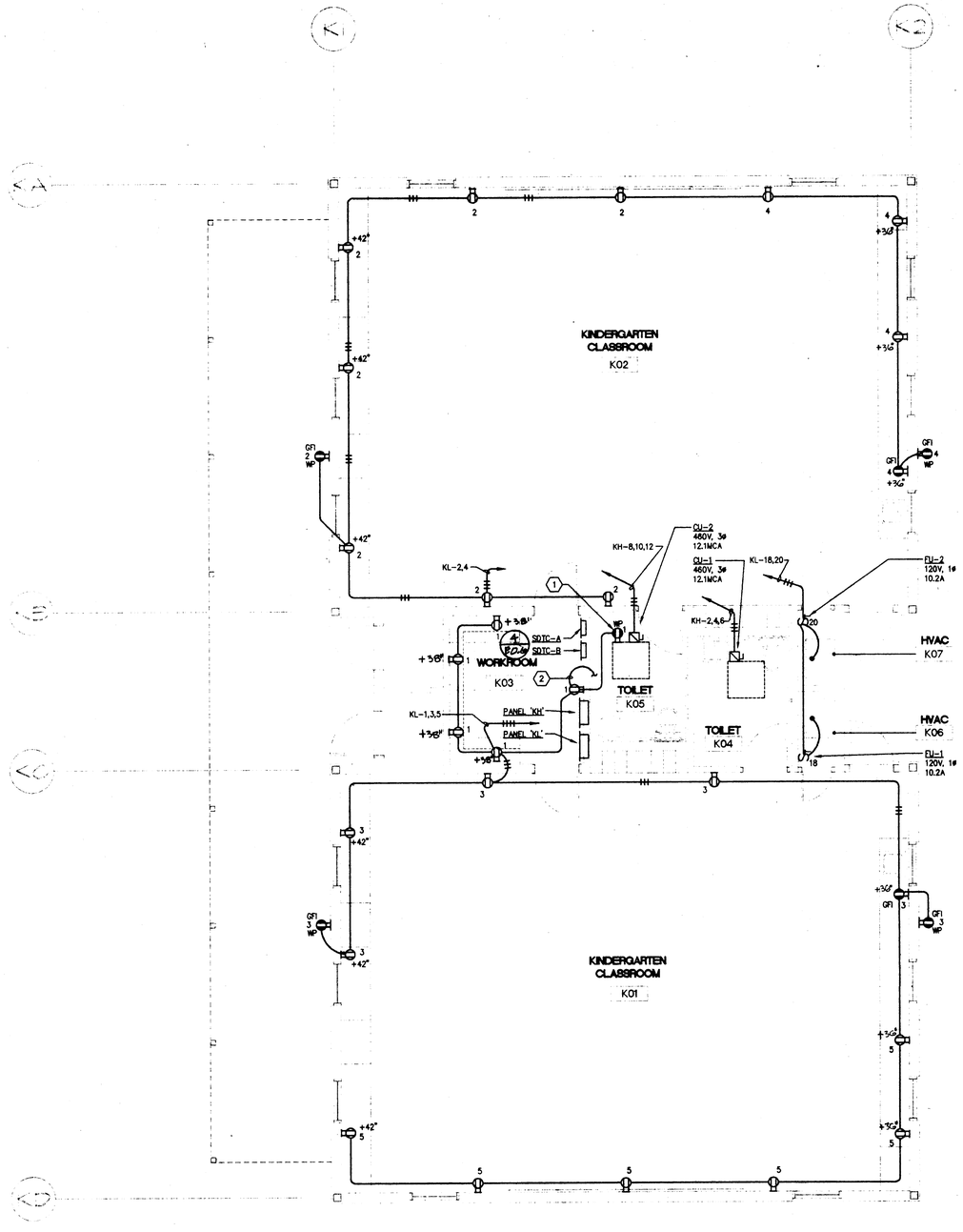

1 ELECTRICAL BLDG 'K':KINDERGARTEN POWER PLAN

SCALE: 1/4" = 1'-0"

TRUE NORTH

SHEET NOTES

1. GFI RECEPTACLE SURFACE MOUNT TO SIDE OF MECHANICAL UNIT CLEAR OF REMOVABLE ACCESS PANELS.
2. UP TO F-2 CONTACTOR. SEE SHEET E2.2A.

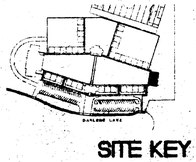

SITE KEY

HKA
Harlan Krusemark - Architect
4415 Cowell Road, Suite 230
Concord, CA 94521
Tel: 925.681.1905
Fax: 925.681.1906

WHM INCORPORATED
Engineering Consultants
1605 School Street
Moraga, CA 94556
Tel (925)376-2902 • Fax (925)376-2904
99104

Revisions | Date

HAWKINS SCHOOL

Darlene Lane
Tracy, CA 95376

Jefferson School District
7500 West Linne Road
Tracy, CA 95376

DSA FILE NO. 39-39
IDENTIFICATION STAMP
DIVISION OF THE STATE ARCHITECT
APPL02 -102225
AC FLS RB
DATE AUG 2 4 2000

Sheet Title:
ELECTRICAL BUILDING K:
KINDERGARTEN
POWER PLAN

Printing Date / Purpose:
4/21/00 DSA REVIEW
8/18/00 DSA APPROVAL

Scale: 1/4" = 1'-0"
Project Number: 9903.00
Sheet Number:

E2.2B

FILE: 99104E2-2B.dwg

08/20/00 7:53:37 PM \\SERVER\CAD\1999\99104\99104E2-2B.DWG

COPYRIGHT © 2000 HARLAN KRUSEMARK - ARCHITECT (HKA) THESE DRAWINGS ARE PROPRIETARY DOCUMENTS OF HKA AND ARE NOT TO BE DISTRIBUTED, PUBLISHED OR REPRODUCED WITHOUT WRITTEN PERMISSION OF HKA.

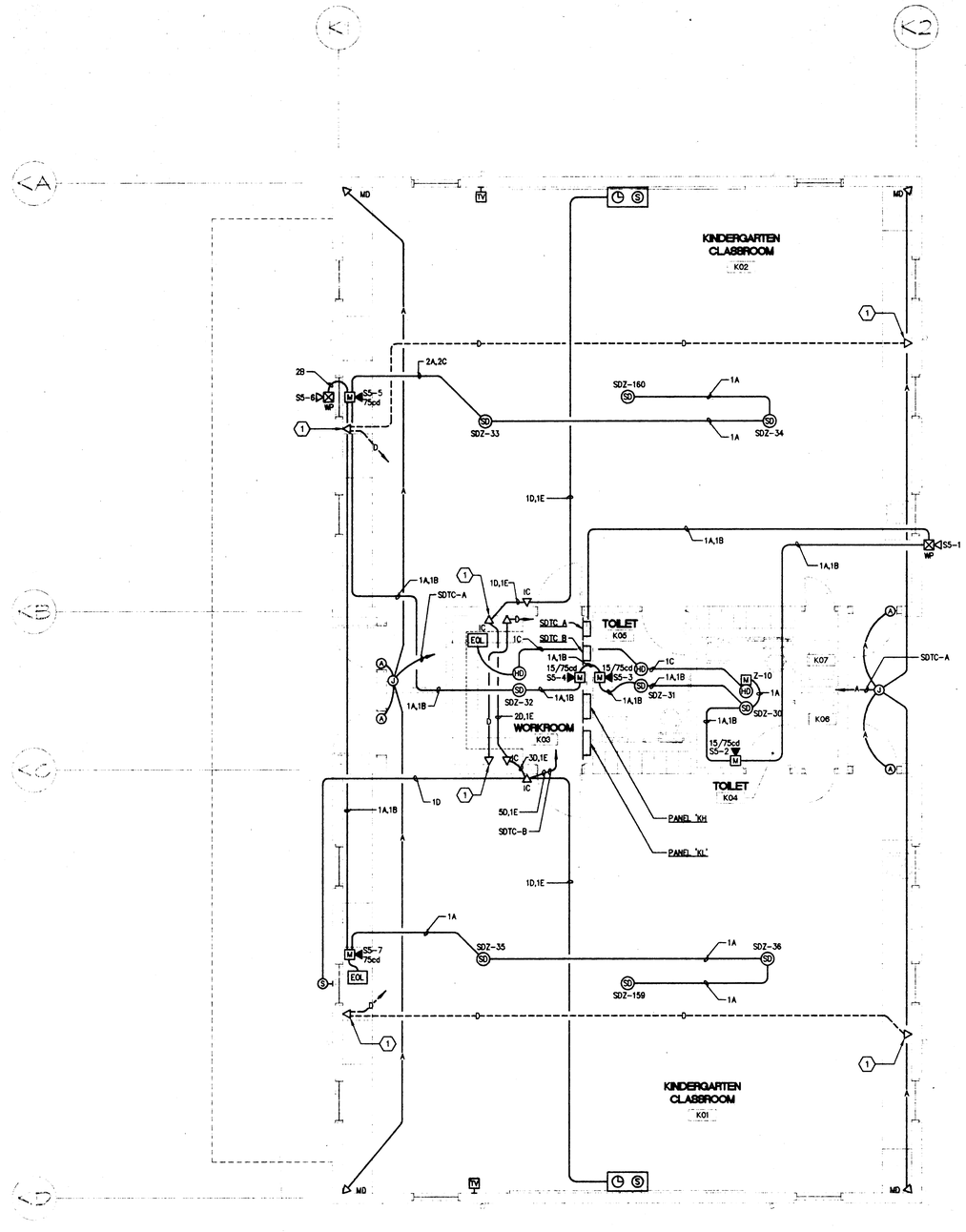

SHEET NOTES

(1) MOUNT OUTLETS ABOVE COUNTER. COORDINATE WITH INTERIOR ELEVATIONS.

(1) ELECTRICAL BLDG 'K': KINDERGARTEN SIGNAL PLAN

SCALE: 1/4" = 1'-0"

TRUE NORTH

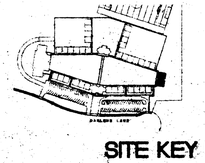

SITE KEY

HKA
Harlan Krusemark - Architect
4415 Cowell Road, Suite 230
Concord, CA 94521
Tel: 925.681.1905
Fax: 925.681.1906

WHM INCORPORATED
Engineering Consultants
1605 School Street
Moraga, CA 94556
Tel (925)376-2902 • Fax (925)376-2904
99104

Revisions	Date
△	
△	
△	
△	
△	
△	

HAWKINS SCHOOL

Darlene Lane
Tracy, CA 95376

Jefferson School District
7500 West Linne Road
Tracy, CA 95376

DSA FILE NO. 99-38
IDENTIFICATION STAMP
DIVISION OF THE STATE ARCHITECT
APPLIE -102225
AC FLS RSC
DATE AUG 2 4 2008

Sheet Title:
ELECTRICAL BUILDING K:
KINDERGARTEN
FIREALARM, AND
SIGNAL PLAN

Printing Date / Purpose:
4/21/00 DSA REVIEW
8/18/00 DSA APPROVAL

Scale: 1/4" = 1'-0"
Project Number: 9903.00
Sheet Number:

E2.2C

FILE 99104E2-2C.dwg

COPYRIGHT (C)2000 HARLAN KRUSEMARK - ARCHITECT (HKA) THESE DRAWINGS ARE PROPRIETARY DOCUMENTS OF HKA AND ARE NOT TO BE DISTRIBUTED, PUBLISHED OR REPRODUCED WITHOUT WRITTEN PERMISSION OF HKA.

08/21/00 12:01:36 PM \\SERVER\CAD\1999\99104\99104E2-2C.DWG

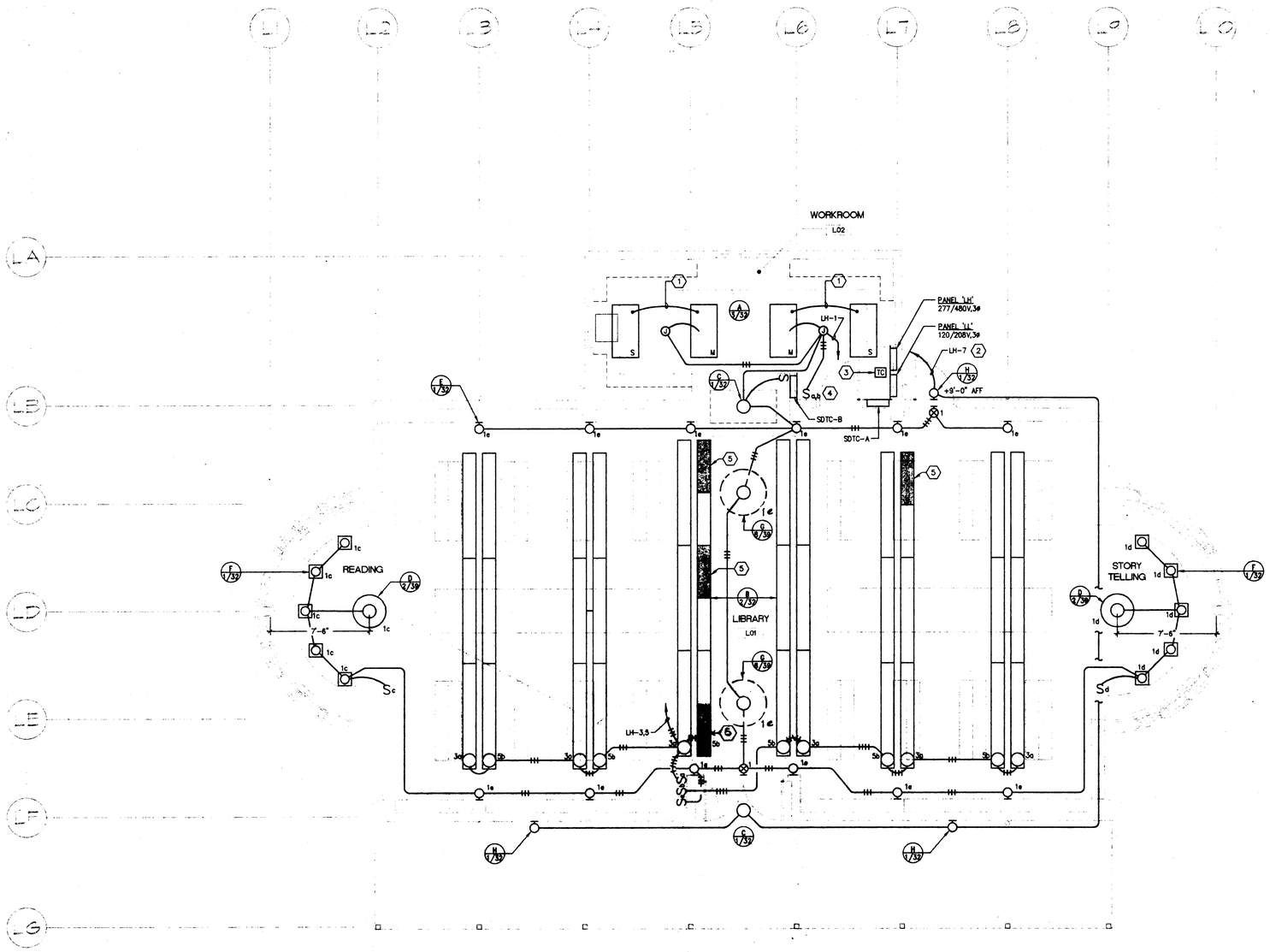

SHEET NOTES

1. FLEX CONNECTION BETWEEN MASTER (M) AND SLAVE (S) FIXTURES FURNISHED WITH FIXTURE.
2. EXTEND TO CIRCUIT INDICATED THROUGH PHOTOCELL STUBBED ABOVE ROOF. SEE 'EXTERIOR LIGHTING CONTROL DIAGRAM'.
3. EXTERIOR LIGHTING TIME CLOCK – MOUNT FLUSH IN WALL BETWEEN AND ABOVE PANELBOARDS. TORK #EW101-3/FLG. SEE DETAIL #8 SHEET E0.5.
4. TWO SWITCHES, a AND b. CONNECT 'a' TO CONTROL OUTBOARD LAMPS, 'b' TO CONTROL INBOARD LAMP(S).
5. PROVIDE BODINE #B-60 BATTERY PACK TO OPERATE TWO DOWN LIGHTS IN THIS SECTION OF FIXTURE TYPE B.

1 ELECTRICAL BLDG 'L': LIBRARY LIGHTING PLAN

SCALE: 1/4" = 1'-0"

TRUE NORTH

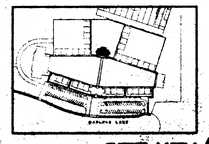

SITE KEY

HKA
Harlan Kruisemark - Architect
4415 Cowell Road, Suite 230
Concord, CA 94521
Tel: 925.681.1905
Fax: 925.681.1906

REGISTERED ARCHITECT HARLAN KRUISEMARK No. C23833 Exp. 9/30/01 STATE OF CALIFORNIA

WHM INCORPORATED
Engineering Consultants
1605 School Street
Moraga, CA 94556
Tel (925)376-2902 • Fax (925)376-2904
99104

REGISTERED PROFESSIONAL ENGINEER RICHARD A. WARREN No. E-9838 Exp. 9-30-02 ELECTRICAL STATE OF CALIFORNIA

Revisions	Date
△	
△	
△	
△	
△	
△	

HAWKINS SCHOOL

Darlene Lane
Tracy, CA 95376

Jefferson School District
7500 West Linne Road
Tracy, CA 95376

DSA FILE NO. 39-39
IDENTIFICATION STAMP
DIVISION OF THE STATE ARCHITECT
APPL#2 -102225
AC FLS
DATE AUG 2 4

Sheet Title:
ELECTRICAL BUILDING L:
LIBRARY
LIGHTING PLAN

Printing Date / Purpose:
4/21/00 DSA REVIEW
8/18/00 DSA APPROVAL

Scale: 1/4" = 1'-0"
Project Number: 9903.00
Sheet Number:

E2.3A

FILE: 99104E2-3A.dwg

3:18 pm 04/13/00
08/20/00 7:49:37 PM \\SERVER\CAD\1999\99104\99104E2-3A.DWG

COPYRIGHT © 2000 HARLAN KRUISEMARK - ARCHITECT (HKA) THESE DRAWINGS ARE PROPRIETARY DOCUMENTS OF HKA AND ARE NOT TO BE DISTRIBUTED, PUBLISHED OR REPRODUCED WITHOUT WRITTEN PERMISSION OF HKA.

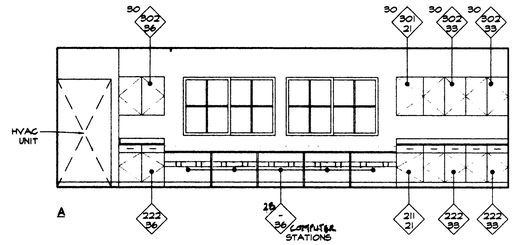

A

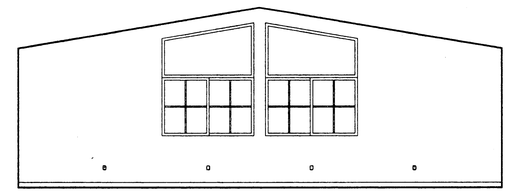

B

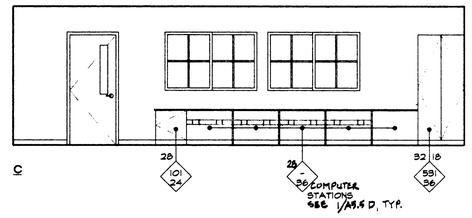

C

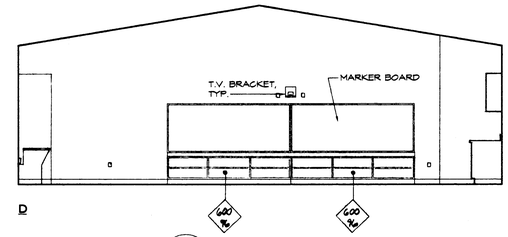

D

1 A5.6 COMPUTER CLASSROOM
SCALE: 1/4" = 1'-0" (ADDITIVE ALTERNATE #1)

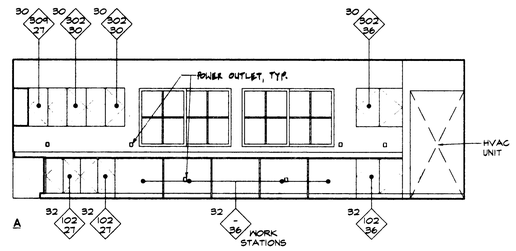

A

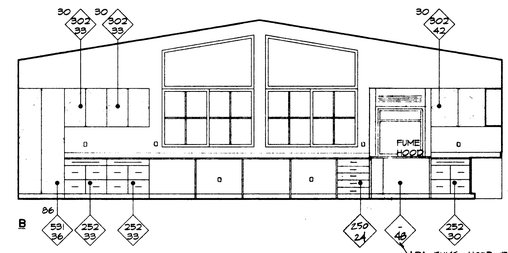

B

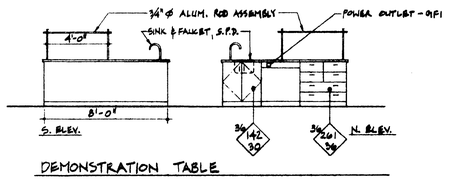

DEMONSTRATION TABLE

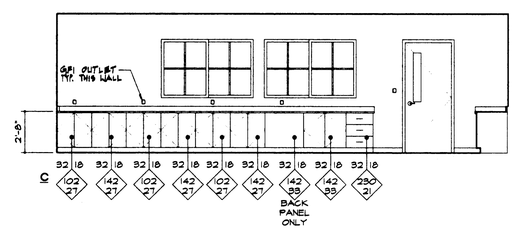

C

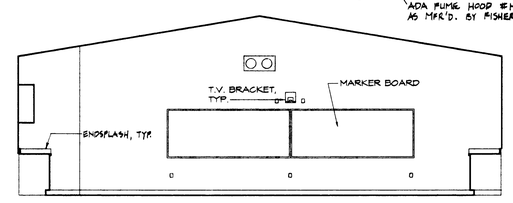

D

2 A5.6 SCIENCE CLASSROOM
SCALE: 1/4" = 1'-0" (ADDITIVE ALTERNATE #1)

HKA
Harlan Krusemark - Architect
4415 Cowell Road, Suite 230
Concord, CA 94521
Tel: 925.681.1905
Fax: 925.681.1906

LICENSED ARCHITECT HARLAN KRUSEMARK No. C23833 Exp. 5/31/01 STATE OF CALIFORNIA

Revisions	Date

HAWKINS SCHOOL
(INCREMENT #2)

475 Darlene Lane
Tracy, CA 95377

Jefferson School District
7500 West Linne Road
Tracy, CA 95304

DSA FILE NO. 39-39
IDENTIFICATION STAMP
DIVISION OF THE STATE ARCHITECT
APPL 02 -102225
AC FLS SS
DATE AUG 4 2000

Sheet Title:
BUILDINGS F
COMPUTER AND SCIENCE LAB
INTERIOR ELEVATIONS

Printing Date / Purpose:
8/18/00 - DSA APPROVAL

Scale: 1/4" = 1'-0"
Project Number: 9903.00
Sheet Number:

A5.6

of Sheets

FILE: 9910/A5.6

COPYRIGHT © 2000 HARLAN KRUSEMARK - ARCHITECT (HKA) THESE DRAWINGS ARE PROPRIETARY DOCUMENTS OF HKA AND ARE NOT TO BE DISTRIBUTED, PUBLISHED OR REPRODUCED WITHOUT WRITTEN PERMISSION OF HKA.

F:\9910-Tracy School\A5.6.dwg Sat Aug 19 13:33:04 2000

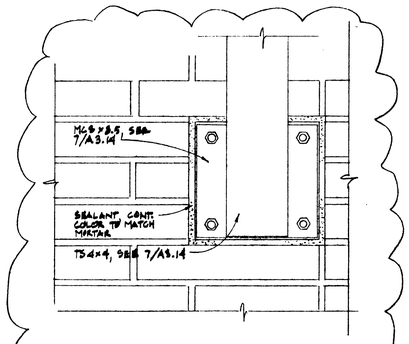

4 A8.2 OUTRIGGER WALL PLATE @ RAKE

SCALE: 3"=1'-0"

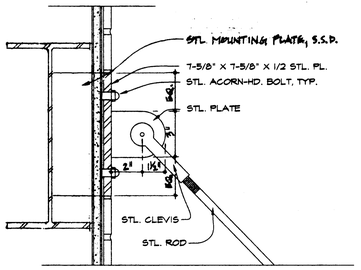

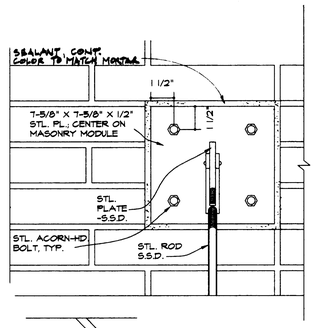

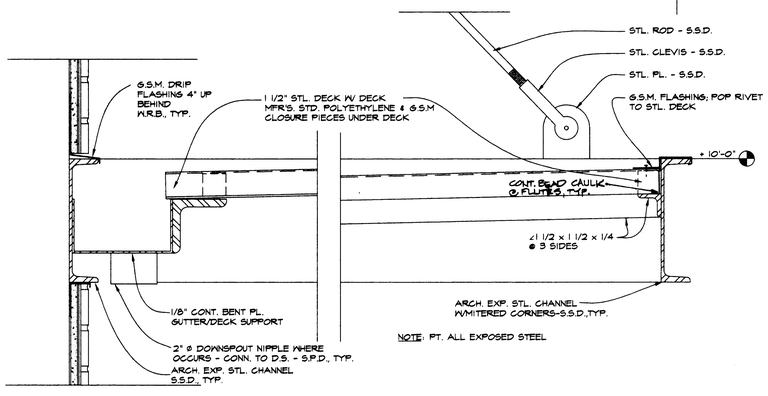

3 A8.2 CANOPY DETAILS @ MULTI-PURPOSE S.S.D.

SCALE: 3" = 1'-0"

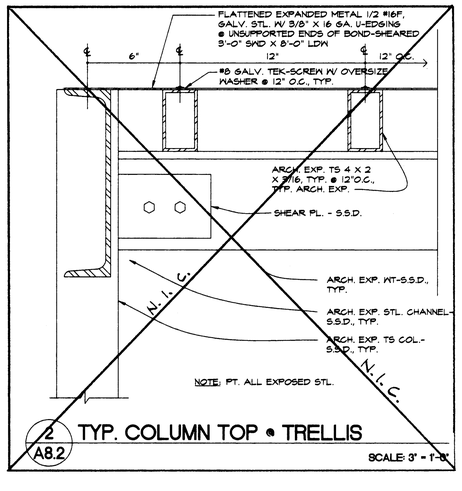

2 A8.2 TYP. COLUMN TOP @ TRELLIS

SCALE: 3" = 1'-0"

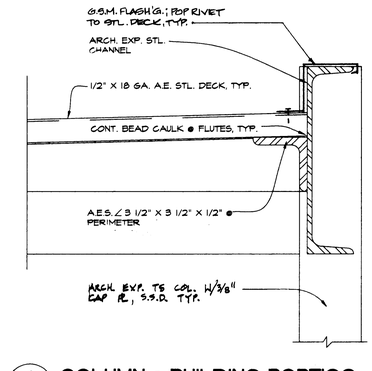

A8.2 COLUMN @ BUILDING PORTICO

SCALE: 3" = 1'-0"

HKA

Harlan Krusemark - Architect
4415 Cowell Road, Suite 230
Concord, CA 94521
Tel: 925.681.1905
Fax: 925.681.1906

LICENSED ARCHITECT HARLAN KRUSEMARK No. C23833 Exp. 9/30/01 STATE OF CALIFORNIA

Revisions	Date

HAWKINS SCHOOL (INCREMENT #1)

475 Darlene Lane
Tracy, CA 95377

Jefferson School District
7500 West Linne Road
Tracy, CA 95304

DSA FILE NO. 39-39

IDENTIFICATION STAMP
DIVISION OF THE STATE ARCHITECT
APPL 02 -102225
AC FLS SS
DATE AUG 2 4 2000

Sheet Title:
EXTERIOR DETAILS: CANOPY, COLUMNS, TRELLIS

Printing Date / Purpose:
8/18/00 - DSA APPROVAL

Scale: As Noted
Project Number: 9903.00
Sheet Number:

A8.2

of Sheets

FILE: 9910/A8.2

COPYRIGHT © 2000 HARLAN KRUSEMARK - ARCHITECT (HKA) THESE DRAWINGS ARE PROPRIETARY DOCUMENTS OF HKA AND ARE NOT TO BE DISTRIBUTED, PUBLISHED OR REPRODUCED WITHOUT WRITTEN PERMISSION OF HKA.

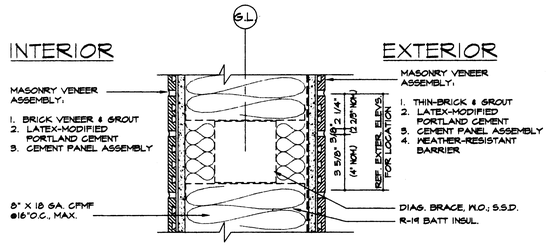

11 / A9.1 PARTITION TYPE 11 - EXTERIOR
SCALE: 3" = 1'-0"

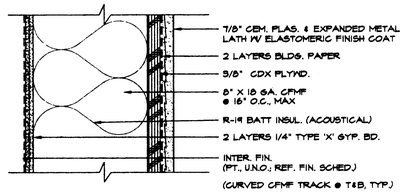

6 / A9.1 PARTITION TYPE 6 - EXTERIOR
SCALE: 3" = 1'-0"

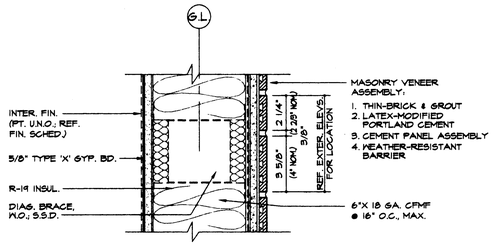

1 / A9.1 PARTITION TYPE 1 - EXTERIOR
SCALE: 3" = 1'-0"

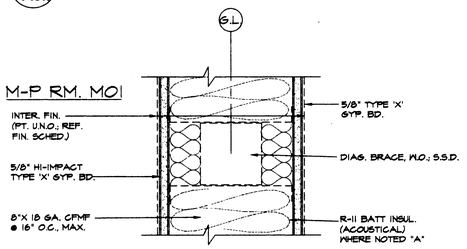

(ONE HOUR-RATED FIRE-RESISTIVE ASSEMBLY PER CBC TABLE 7-B, ITEM 16-1.1 WHERE NOTED "R")

12 / A9.1 PARTITION TYPE 12 - INTERIOR
SCALE: 3" = 1'-0"

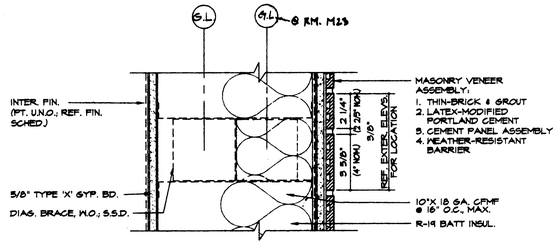

7 / A9.1 PARTITION TYPE 7 - EXTERIOR
SCALE: 3" = 1'-0"

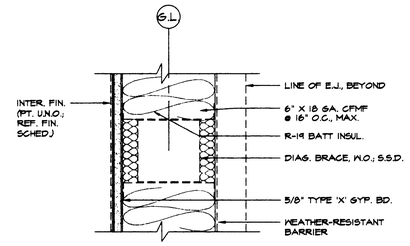

2 / A9.1 PARTITION TYPE 2 - INTERIOR
SCALE: 3" = 1'-0"

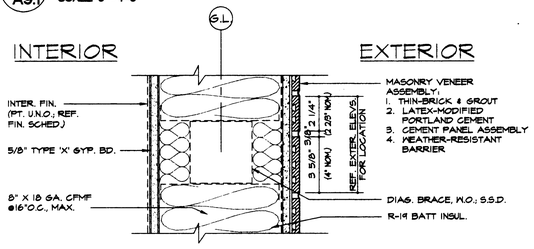

13 / A9.1 PARTITION TYPE 13 - EXTERIOR
SCALE: 3" = 1'-0"

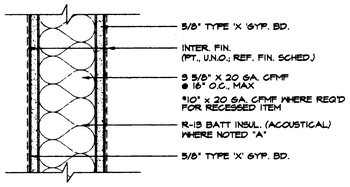

(ONE HOUR-RATED FIRE-RESISTIVE ASSEMBLY PER CBC TABLE 7-B, ITEM 16-1.1 WHERE NOTED "R")

8 / A9.1 PARTITION TYPE 8 - INTERIOR
SCALE: 3" = 1'-0"

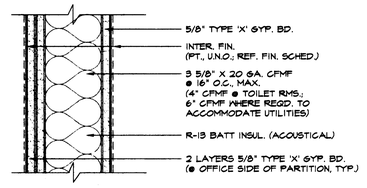

3 / A9.1 PARTITION TYPE 3 - INTERIOR
SCALE: 3" = 1'-0"

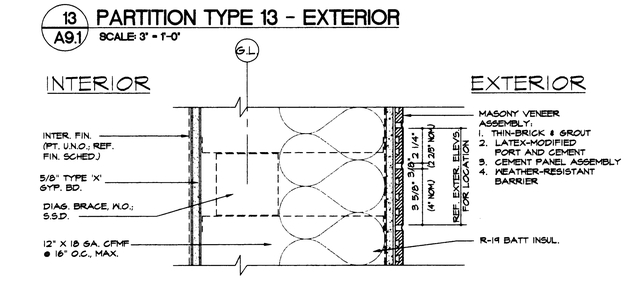

14 / A9.1 PARTITION TYPE 14 - EXTERIOR
SCALE: 3" = 1'-0"

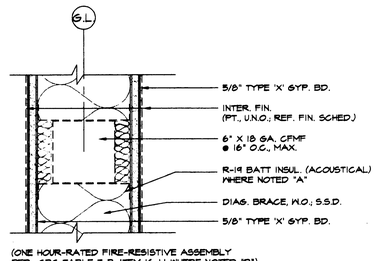

(ONE HOUR-RATED FIRE-RESISTIVE ASSEMBLY PER CBC TABLE 7-B, ITEM 16-1.1 WHERE NOTED "R")

9 / A9.1 PARTITION TYPE 9 - INTERIOR
SCALE: 3" = 1'-0"

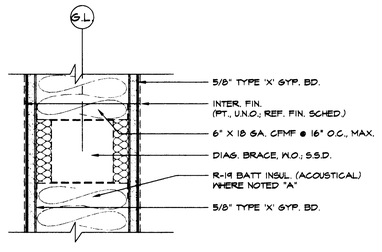

(ONE HOUR-RATED FIRE-RESISTIVE ASSEMBLY PER CBC TABLE 7-B, ITEM 16-1.1 WHERE NOTED "R")

4 / A9.1 PARTITION TYPE 4 - INTERIOR
SCALE: 3" = 1'-0"

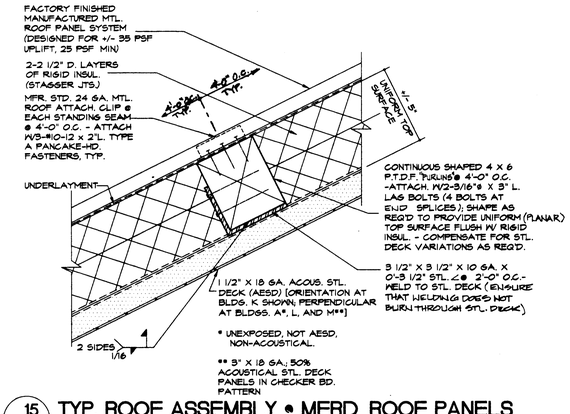

15 / A9.1 TYP. ROOF ASSEMBLY @ MFRD. ROOF PANELS
SCALE: 3" = 1'-0"

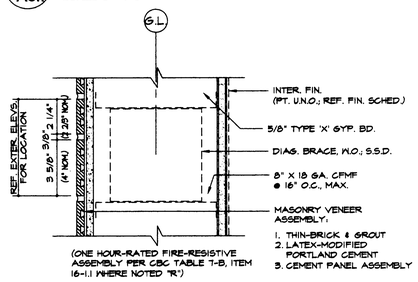

(ONE HOUR-RATED FIRE-RESISTIVE ASSEMBLY PER CBC TABLE 7-B, ITEM 16-1.1 WHERE NOTED "R")

10 / A9.1 PARTITION TYPE 10 - INTERIOR
SCALE: 3" = 1'-0"

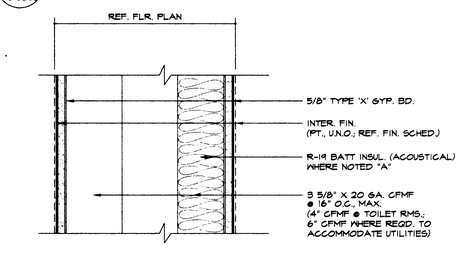

5 / A9.1 PARTITION TYPE 5 - INTERIOR
SCALE: 3" = 1'-0"

PARTITION NOTES

1CR/11T

1. METAL STUD FRAMING IS FULL HEIGHT FROM STRUCTURAL FLOOR TO UNDERSIDE OF STRUCTURE, U.O.N.
2. FIRE RATED PARTITIONS SHALL BE FULLY FIRE-SEALED AND FIRESTOPPED AT CONNECTION TO UNDERSIDE OF STRUCTURE, AND FULLY FIRE-SEALED AT BOTTOM CONNECTION TO S.O.S. PENETRATIONS THROUGH FIRE-RATED PARTITIONS SHALL BE FIRESTOPPED.
3. WHERE PARTITIONS ARE UNABLE TO EXTEND FULL HEIGHT DUE TO ABOVE-CEILING OBSTRUCTIONS, CONTRACTOR SHALL BE RESPONSIBLE FOR PROVIDING CONTINUATION OF THE PARTITION WITH ANY REQUIRED OFFSETS TO BE REVIEWED BY THE ARCHITECT BEFORE PROCEEDING WITH THE INSTALLATION.
4. MAINTAIN RATINGS FOR FIRE-RESISTIVE PERIODS WHERE PENETRATIONS (REF. SPEC. SEC'N 07840 - FIRESTOPPING) AND RECESSED EQUIPMENT OCCUR.
5. COLD-FORMED METAL FRAMING (CFMF; I.E. "METAL STUD") INFORMATION:
   A. MINIMUM SPACING SHALL BE 16" O.C., TYP.
   B. MINIMUM GAGE SHALL BE 18 GAGE TYP., 20 GAGE FOR INTERIOR PARTITIONS, AND 18 GAGE FOR STUDS WITH FINISH ASSEMBLIES ON ONE SIDE ONLY.
   C. STUD FLANGES SHALL BE 1 5/8", TYP.; TRACK FLANGES SHALL BE 1 1/4", TYP.
   D. MAXIMUM ALLOWABLE DEFLECTION SHALL BE L/360.
   E. MINIMUM STUD SIZES ARE AS DESCRIBED IN PARTITION TYPES, U.N.O.
6. PROVIDE SOUND ATTENUATION BATT INSULATION FULL HEIGHT IN PARTITIONS WHERE NOTED "A" IN PARTITION KEY. WHERE INDICATED "TA" PROVIDE THERMAL ONLY, PLUS ACOUSTICAL SEALANT. WHERE NOTED "R" PROVIDE FIRE-RESISTIVE ASSEMBLY FOR OCCUPANCY SEPARATION.
7. PROVIDE ACOUSTICAL SEALANT AT PERIMETER OF BOTH SIDES OF WALLS WHERE SOUND ATTENUATION INSULATION OCCURS. SEAL TOP AND BOTTOM OF WALLS WITH ACOUSTICAL BATT INSULATION WITH ACOUSTICAL SEALANT.
8. UNLESS NOTED OTHERWISE, PROVIDE BACKING PLATES AS FOLLOWS:

   BACKING PLATES: CONTINUOUS ACROSS NOT LESS THAN THREE STUDS. NOTCH CHANNELS AT STUDS WHERE REQUIRED.

   A. FOR LOADS LESS THAN OR EQUAL TO 50 POUNDS PER LINEAR FOOT (SURFACE MOUNTED MIRRORS, TOWEL DISPENSERS, AND SIMILAR ITEMS): 6" X 16 GAGE PLATE ATTACHED AT EACH STUD WITH THREE 5-12 FLAT-HEAD SHEET METAL SCREWS AT EACH STUD (LIGHT DUTY -REFER TO DETAIL 14/A9.4)
   B. FOR LOADS OF 51 POUNDS PER LINEAR FOOT TO 100 POUNDS PER LINEAR FOOT (COUNTERS AND SIMILAR ITEMS). 6" X 1 1/4" X 16 GAGE TRACK CHANNEL WELDED TO EACH STUD AND THREE 5-12 FLAT HEAD SHEET METAL SCREWS AT EACH STUD (MEDIUM DUTY - REFER TO DETAIL 15/A9.4)
   C. FOR LOADS OF 101 POUNDS PER LINEAR FOOT TO 250 POUNDS PER LINEAR FOOT (GRAB BARS, TV MOUNTS, LADDERS, UPPER WALL CABINETS, EPH AND SIMILAR ITEMS): 6" WIDE x 14 GAGE STEEL PLATE WELDED TO 6" X 1 1/4" X 16 GAGE TRACK CHANNEL, STIFFENERS ATTACHED WITH THREE 5-12 FLAT-HEAD SHEET METAL SCREWS AND WELDED TO EACH STUD (HEAVY DUTY - REFER TO DETAIL 16/A9.4)
9. PROVIDE 6" HIGH CONCRETE CURB, FULL WIDTH OF STUD, WHERE NOTED "C" IN PARTITION KEY. PROVIDE HIGHER CONCRETE CURB, FULL WIDTH STUD, WHERE INDICATED.
10. CONCRETE CURBS: UNLESS OTHERWISE NOTED PROVIDE ONE #4 CONTINUOUS HORIZONTAL REINFORCING BAR PER EACH 70 SQUARE INCHES OF CURB CROSS SECTIONAL AREA (NOT LESS THAN ONE) AND VERTICAL BARS OR DOWELS AT SIZE AND SPACING FOR SLAB REINFORCING (NOT LESS THAN #5 AT 16 INCHES ON CENTER). PROVIDE CONTINUOUS, KERFED, PRESERVATIVE - TREATED 1x2 NAILER AT BOTTOM OF CURB FOR ATTACHMENT OF PARTITION SHEATING.
11. FIRE-RESISTIVE PARTITIONS NOTED "R" SHALL BE ONE-HOUR-RATED FIRE-RESISTIVE OCCUPANCY SEPARATIONS IN ACCORDANCE WITH CBC SECTIONS 302 AND 709.
12. NOTATION SUCH AS 10/11 INDICATES PARTITION TYPE 10 BELOW, PARTITION TYPE 11 ABOVE.

HKA
Harlan Krusemark - Architect
4415 Cowell Road, Suite 230
Concord, CA 94521
Tel: 925.681.1905
Fax: 925.681.1906

LICENSED ARCHITECT HARLAN KRUSEMARK No. C23633 Exp. 9/30/16 STATE OF CALIFORNIA

Revisions	Date
△	
△	
△	
△	
△	
△	

HAWKINS SCHOOL
(INCREMENT #1)

475 Darlene Lane
Tracy, CA 95377

Jefferson School District
7500 West Linne Road
Tracy, CA 95304

DSA FILE NO. 39-39
IDENTIFICATION STAMP
DIVISION OF THE STATE ARCHITECT
APPL 02 -102225
AC RK FLS RK SS
DATE AUG. 2 & 2000

Sheet Title:
PARTITION AND ROOF ASSEMBLY TYPES AND NOTES

Printing Date / Purpose:
8/18/00 - DSA APPROVAL

Scale: As Noted
Project Number: 9903.00
Sheet Number:

A9.1

of Sheets

FILE: 9910A9.1

COPYRIGHT © 2000 HARLAN KRUSEMARK - ARCHITECT (HKA) THESE DRAWINGS ARE PROPRIETARY DOCUMENTS OF HKA AND ARE NOT TO BE DISTRIBUTED, PUBLISHED OR REPRODUCED WITHOUT WRITTEN PERMISSION OF HKA.

SIGNAGE SCHEDULE

SCALE: 1/4" = 1'-0"

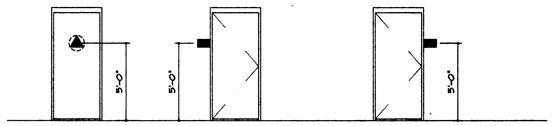

TYPE A
EA. TOILET ROOM

ACCESSIBLE TOILET ROOM SIGNS: SEE SPECIFICATION SECTION 10422

TYPE B
EACH ROOM
(EXCEPT TOILET ROOMS)

ROOM SIGNS: SEE SPECIFICATION SECTION 10422

TYPE C
WHERE REQUIRED
IN LIEU OF TYPE "B"

ROOM SIGNS: SEE SPECIFICATION SECTION 10422. (MOUNT SIGN @ HINGE SIDE OF DOOR WHERE THERE IS GLAZING DIRECTLY ADJACENT TO LATCH SIDE OF DOOR)

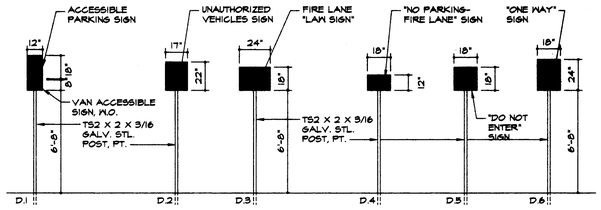

TYPE D

D.1 @ EA. ACCESSIBLE PARKING SPACE.
D.2 @ EA. DRIVEWAY ENTRANCE
D.3 @ FIRE LANE DRIVEWAY ENTRANCE
D.4 @ FIRE LANE GATE ENTRANCE
D.5 @ ONE-WAY DRIVEWAY EXIT
~~D.6 @ ONE-WAY DRIVEWAY ENTRANCE~~

PARKING AREA SIGNS: SEE SHEET A1.1 FOR SIGN LOCATIONS (REF. CBC SECTION 11-2B.5 FOR EXACT REQUIREMENTS). SEE SPECIFICATION SECTION 10422

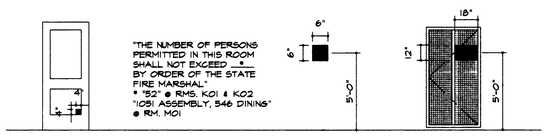

TYPE E
EA. MAIN ENTRY DOOR

ENTRY DECALS: COMPLY W/ CBC FIG. 11B-6 FOR GRAPHIC PROPORTIONS. SEE SPECIFICATION SECTION 10422.

TYPE F
EACH 'A' OCCUPANCY & KINDERGARTEN CLASSROOMS & MULTI-PURPOSE ROOM

- ROOM CAPACITY SIGNS: SEE INTERIOR ELEVATIONS FOR LOCATION. SEE SPECIFICATION SECTION 10422
- ASSISTIVE LISTENING SIGNS: SEE INTERIOR ELEVATIONS FOR LOCATION. SEE SPECIFICATION SECTION 10422 (@ DR. M01A).
- PLATFORM LIFT SIGNS: SEE INTERIOR ELEVATIONS FOR LOCATION. SEE SPECIFICATION SECTION 10422. (@ DR. M08A).

TYPE G

ACCESSIBLE TOILET ROOM AND ENTRANCE SIGNS: SEE SPECIFICATION SECTION 10422

TYPE H

GATE TO REMAIN LOCKED IN OPEN POSITION DURING SCHOOL HOURS AND DURING ANY PUBLIC FUNCTIONS SIGNS: SEE SPECIFICATION SECTION 10422

DOOR TYPES

SCALE: 1/4" = 1'-0" U.N.O.

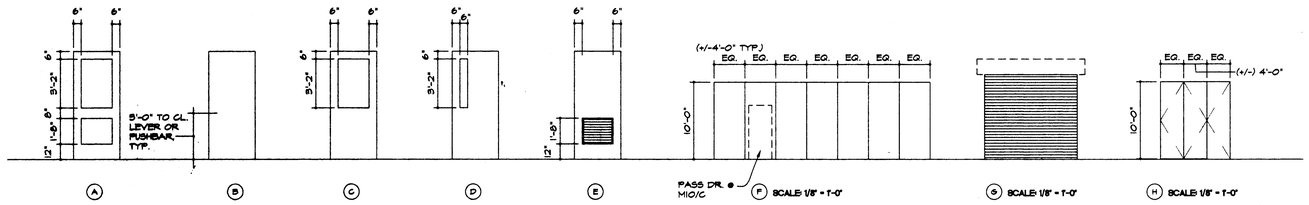

FRAME TYPES

SCALE: 1/4" = 1'-0"

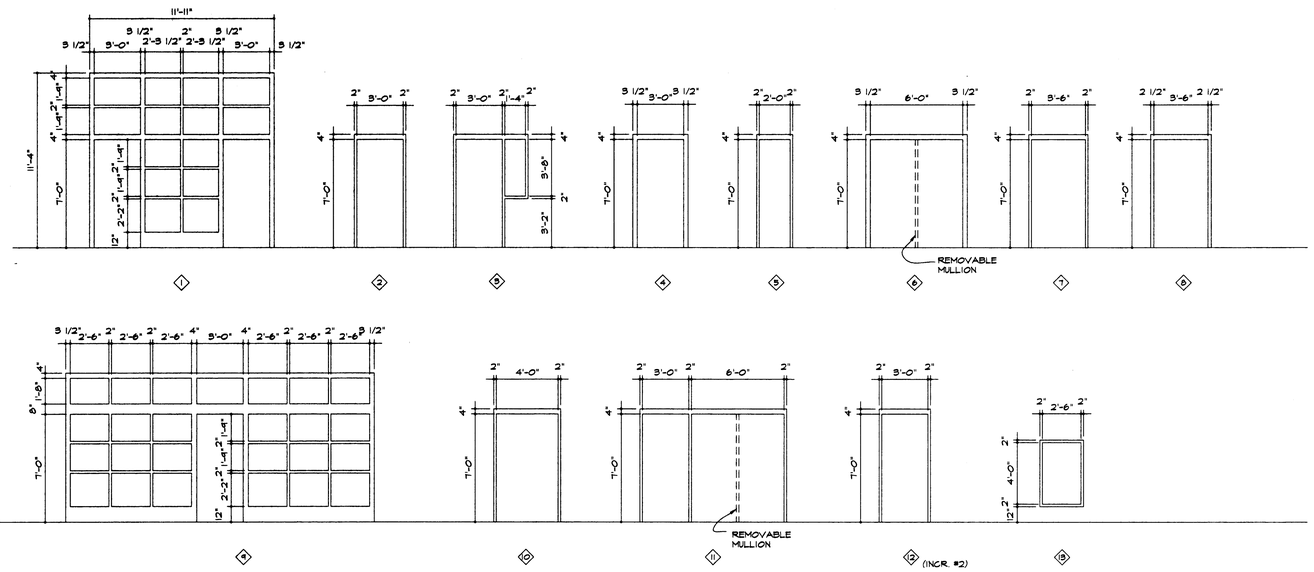

WINDOW TYPES

SCALE: 1/4" = 1'-0"

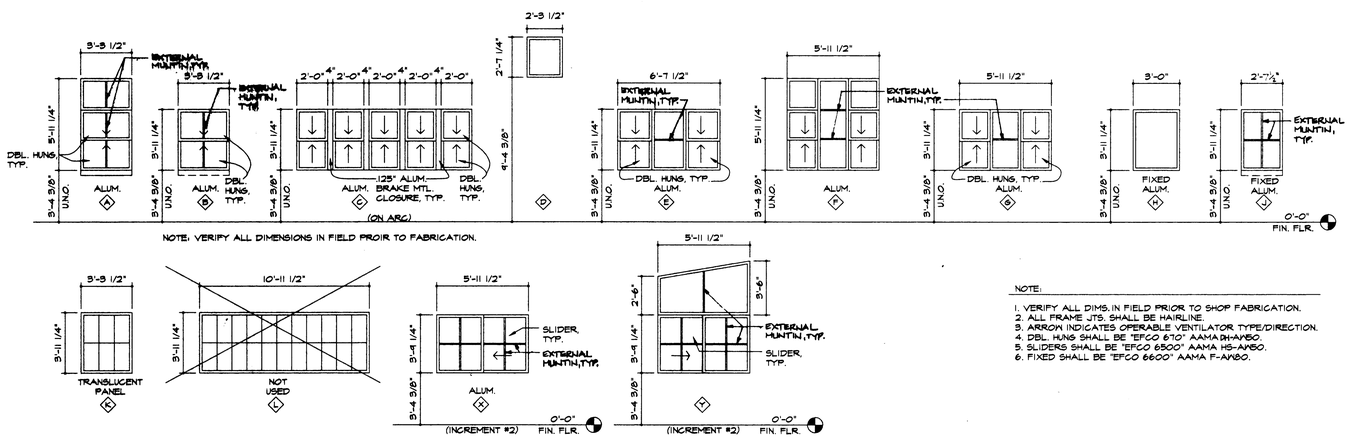

NOTE: VERIFY ALL DIMENSIONS IN FIELD PRIOR TO FABRICATION.

NOTE:

1. VERIFY ALL DIMS. IN FIELD PRIOR TO SHOP FABRICATION.
2. ALL FRAME JTS. SHALL BE HAIRLINE.
3. ARROW INDICATES OPERABLE VENTILATOR TYPE/DIRECTION.
4. DBL. HUNG SHALL BE "EFCO 6710" AAMA DH-AW50.
5. SLIDERS SHALL BE "EFCO 6500" AAMA HS-AW50.
6. FIXED SHALL BE "EFCO 6600" AAMA F-AW50.

HKA
Harlan Krusemark - Architect
4415 Cowell Road, Suite 230
Concord, CA 94521
Tel: 925.681.1905
Fax: 925.681.1906

LICENSED ARCHITECT HARLAN KRUSEMARK No. C23833 Exp. 9/30/00 STATE OF CALIFORNIA

Revisions	Date

HAWKINS SCHOOL
(INCREMENTS #1 & #2)

475 Darlene Lane
Tracy, CA 95377

Jefferson School District
7500 West Linne Road
Tracy, CA 95304

DSA FILE NO. 39-39
IDENTIFICATION STAMP
DIVISION OF THE STATE ARCHITECT
APPL 02 -102225
AC FLS SS
DATE AUG 2 4 2000

Sheet Title:
DOOR, FRAME, AND WINDOW TYPES

Printing Date / Purpose:
8/18/00 - DSA APPROVAL

Scale: As Noted
Project Number: 9903.00
Sheet Number:

A9.3

of Sheets

FILE: 9910/A9.3

COPYRIGHT © 2000 HARLAN KRUSEMARK - ARCHITECT (HKA) THESE DRAWINGS ARE PROPRIETARY DOCUMENTS OF HKA AND ARE NOT TO BE DISTRIBUTED, PUBLISHED OR REPRODUCED WITHOUT WRITTEN PERMISSION OF HKA.

GENERAL

1. ALL MATERIALS AND WORKMANSHIP SHALL CONFORM TO THE CALIFORNIA BUILDING CODE (CBC) 1998.
2. CONTRACT DOCUMENTS, INCLUDING SPECIFICATIONS ARE TO BE USED IN CONJUNCTION WITH THESE DRAWINGS.
3. CONTRACTOR SHALL VERIFY ALL DIMENSIONS AND EXISTING CONDITIONS, AND SHALL REPORT ALL DISCREPANCIES IN WRITING TO THE CONSTRUCTION MANAGER BEFORE COMMENCING WORK.
4. INTENT:
   IF CERTAIN FEATURES ARE NOT FULLY SHOWN OR CALLED FOR ON THE DRAWINGS OR SPECIFICATIONS, THEIR CONSTRUCTION SHALL BE OF SAME CHARACTER AS FOR SIMILAR CONDITIONS THAT ARE SHOWN OR CALLED FOR.
5. CONTRACTOR SHALL NOT BACKFILL AT/OR BELOW GRADE WALLS UNTIL TOP AND BOTTOM SLABS AS REQUIRED HAVE BEEN POURED AND ACHIEVED THEIR DESIGN STRENGTH. OTHERWISE, WALLS SHALL BE SECURELY BRACED TO CARRY CONSTRUCTION LOADS. CONTRACTOR TO RETAIN LICENSED PROFESSIONAL ENGINEER FOR THE DESIGN OF SUCH REQUIRED BRACING.
6. DO NOT USE SCALED DIMENSIONS. USE WRITTEN DIMENSIONS OR WHERE NO DIMENSION IS PROVIDED, CONSULT WITH THE CONSTRUCTION MANAGER FOR CLARIFICATION BEFORE PROCEEDING WITH THE WORK.
7. SITE VISITS BY THE STRUCTURAL ENGINEER, SHALL NOT BE CONSTRUED AS SPECIAL INSPECTIONS, AS DEFINED BY THE 1998 CBC.
8. CONTRACTOR SHALL COORDINATE ALL INFORMATION RELATED TO EDGE OF SLAB, CURBS AND DEPRESSIONS WITH ARCHITECTURAL AND CIVIL DRAWINGS. SEE DRAWINGS OTHER THAN STRUCTURAL FOR KINDS OF FLOOR FINISH AND THEIR LOCATION, FOR DEPRESSIONS IN FLOOR SLABS, FOR OPENINGS IN WALLS AND FLOORS REQUIRED BY ARCHITECTURAL AND MECHANICAL, CIVIL FEATURES, WALKS, RAMPS, STAIRS, CURBS, ETC. TYPICAL EDGE OF STRUCTURE SLAB IS SHOWN ON THE STRUCTURAL DRAWINGS. CONTRACTOR TO COORDINATE LOCATIONS, DIMENSIONS AND ELEVATIONS WITH EXTERIOR SKIN DETAILS. FOR DETAILS, LOCATIONS AND NUMBERS OF MISC. INSERTS AND OTHER EMBEDDED CAST IN THE WALLS AND SLABS REFER TO ARCHITECTURAL, MECHANICAL, PLUMBING & ELECTRICAL DRAWINGS.
9. N.A. CONTRACTOR SHALL COORDINATE ALL ELEVATOR, STAIR OPENINGS WITH ARCHITECTURAL DRAWINGS. CONTRACTOR TO COORDINATE ALL ELEVATOR DETAILS WITH REQUIREMENTS OF ELEVATOR SUPPLIER'S DRAWINGS. PROVIDE ALL SEPARATOR BEAMS, MACHINE ROOM EQUIPMENT SUPPORT BEAMS, EMBEDDED ITEAMS SHOWN ON THESE PLANS AND LOCATE IN COORDINATION WITH ELEVATOR SUPPLIER'S DRAWINGS.
10. IN CASE OF CONFLICT AMONG STRUCTURAL DRAWINGS OR BETWEEN STRUCTURAL DRAWINGS AND SPECIFICATIONS, THE MOST STRINGENT REQUIREMENT GOVERNS.

LOADINGS

1. ROOF LIVE LOADS
   A. TYPICAL — 20 PSF
2. FLOOR LIVE LOADS
   A. SLABS-ON-GRADE — 100 PSF
   E. MECHANICAL ROOMS — WT. OF EQUIP.& EQUIP. PADS + 50 PSF LL
3. WIND — BASIC WIND SPEED 75 MPH
   $P = CeCqQsIw$ — EXPOSURE C Iw = 1.00 FOR BLDGS. A, K, L; Iw = 1.15 FOR BLDG. M. (IN ACCORDANCE WITH ASCE 7-88)
4. SEISMIC
   DESIGN BASE SHEAR, ZONE 3, SOIL TYPE Sd
   $V = 2.5 \frac{CaI}{R} W$
   I = 1.00 FOR BLGS. A, K, L; I = 1.15 FOR BLDG. M.
   R = 5.6
   Ca = 0.36
   W = TOTAL DEAD LOAD

SPECIAL INSPECTIONS:

1701A.1 GENERAL. IN ADDITION TO THE PROJECT REQUIRED BY TITLE 24, PART 1, SECTION 4-333, THE SCHOOL DISTRICT SHALL EMPLOY ONE OR MORE SPECIAL INSPECTORS WHO SHALL PROVIDE INSPECTIONS DURING CONSTRUCTION ON THE TYPES OF WORK LISTED UNDER SECTION 1701A.5.

1701A.2 PROJECT AND SPECIAL INSPECTORS. THE PROJECT INSPECTORS AND ALL SPECIAL INSPECTORS SHALL BE QUALIFIED PERSONS WHO SHALL DEMONSTRATE COMPETENCE, TO THE SATISFACTION OF THE ENFORCEMENT AGENCY, FOR INSPECTION OF THE PARTICULAR TYPE OF CONSTRUCTION OR OPERATION REQUIRING SPECIAL INSPECTION IN ACCORDANCE WITH TITLE 24, PART 1, SECTION 4-333.

1701A.3 DUTIES AND RESPONSIBILITIES OF THE PROJECT AND SPECIAL INSPECTORS. THE PROJECT AND SPECIAL INSPECTORS SHALL OBSERVE THE WORK ASSIGNED FOR CONFORMANCE TO THE APPROVED DESIGN DRAWINGS AND SPECIFICATIONS.

THE PROJECT INSPECTORS AND SPECIAL INSPECTORS SHALL SUBMIT INSPECTION REPORTS TO THE ENFORCEMENT AGENCY AND OTHER DESIGNATED PERSONS AS REQUIRED BY TITLE 24, PART 1, SECTIONS 4-336 AND 4-342. ALL DISCREPANCIES SHALL BE BROUGHT TO THE IMMEDIATE ATTENTION OF THE CONTRACTOR FOR CORRECTION IN ACCORDANCE WITH TITLE 24, PART 1, SECTION 4-342.

THE PROJECT INSPECTOR AND SPECIAL INSPECTORS SHALL SUBMIT REPORTS AS REQUIRED BY TITLE 24, PART 1, SECTION 4-336 AND 4-342 STATING THAT THEY HAVE PERSONAL KNOWLEDGE THAT THE WORK HAS BEEN PERFORMED AND THAT THE MATERIALS USED AND INSTALLED ARE IN COMPLIANCE WITH THE APPROVED PLANS AND SPECIFICATIONS AND THE APPLICABLE WORKMANSHIP PROVISIONS OF THIS CODE.

1701A.4 STANDARDS OF QUALITY. THE STANDARDS LISTED BELOW LABELED A "UBC STANDARD" ARE ALSO LISTED IN CHAPTER 35, PART II, AND ARE PART OF THIS CODE. THE OTHER STANDARDS LISTED BELOW ARE RECOGNIZED STANDARDS AND ARE ALSO PART OF THIS CODE. (SEE SECTIONS 3503 AND 3504.)

1...CONCRETE.
ASTM C94, READY-MIXED CONCRETE
2...CONNECTIONS.
SPECIFICATION FOR STRUCTURAL JOINTS USING ASTM A 325 OR A 490 BOLTS-ALLOWABLE STRESS DESIGN, RESEARCH COUNCIL OF STRUCTURAL CONNECTIONS, SECTION 1701A.5, ITEM 6.
3... SPRAY-APPLIED FIRE-RESISTIVE MATERIALS.
UBC STANDARD 7-6, THICKNESS AND DENSITY DETERMINATION FOR SPRAY-APPLIED FIRE-RESISTIVE MATERIALS.

1701A.5 TYPES OF WORK REQUIRING CONSTANT PRESENCE OF THE PROJECT OR SPECIAL INSPECTORS. THE TYPES OF WORK LISTED BELOW SHALL REQUIRE CONSTANT PRESENCE AND INSPECTION (SEE TITLE 24, PART 1, SECTION 4-342) BY THE PROJECT OR SPECIAL INSPECTOR. A SPECIAL INSPECTOR IS NEEDED WHEN RATED.

1. CONCRETE. DURING THE TAKING OF TEST SPECIMENS AND PLACING OF REINFORCED CONCRETE. SEE CHAPTER 19A, DIVISION IX, SECTION 1929A FOR ADDITIONAL REQUIREMENTS.
2. BOLTS INSTALLED IN CONCRETE. PRIOR TO AND DURING THE PLACEMENT OF CONCRETE AROUND BOLTS.

N.A.
3. SPECIAL MOMENT-RESISTING CONCRETE FRAME. FOR MOMENT FRAMES RESISTING DESIGN SEISMIC LOAD IN STRUCTURES , THE PROJECT OR SPECIAL INSPECTOR , SHALL PROVIDE CONSTANT INSPECTION OF THE PLACEMENT OF THE REINFORCEMENT AND CONCRETE. SEE CHAPTER 19A, DIVISION IX, SECTION 1929A FOR ADDITIONAL REQUIREMENTS.
4. PRESTRESSING STEEL TENDONS. SPECIAL INSPECTOR REQUIRED.
4.1 DURING ALL STRESSING AND GROUTING OF TENDONS IN PRESTRESSED CONCRETE.
4.2 DURING PLACING OF PRESTRESSING TENDONS .
EXCEPTION: THE SPECIAL INSPECTOR NEED NOT BE PRESENT CONSTANTLY DURING PLACING OF PRESTRESSING TENDONS, PROVIDED THE SPECIAL INSPECTOR HAS INSPECTED FOR CONFORMANCE TO THE APPROVED PLANS PRIOR TO THE CLOSING OF FORMS OR THE DELIVERY OF CONCRETE TO THE JOBSITE. SEE CHAPTER 19A, DIVISION IX, SECTION 1929A FOR ADDITIONAL REQUIREMENTS.

5. STRUCTURAL WELDING. SPECIAL INSPECTOR REQUIRED.

5.1 GENERAL . DURING THE WELDING OF ANY MEMBER OR CONNECTION THAT IS DESIGNED TO RESIST LOADS AND FORCES REQUIRED BY THIS CODE. SEE ALSO CHAPTER 22A, DIVISION XII, SECTION 2231A FOR ADDITIONAL REQUIREMENTS.

EXCEPTION: THE SPECIAL INSPECTOR NEED NOT BE CONSTANTLY PRESENT DURING WELDING OF THE FOLLOWING ITEMS, PROVIDED THE MATERIALS, QUALIFICATIONS OF WELDING PROCEDURES AND WELDERS ARE VERIFIED PRIOR TO THE START OF WORK; CONTINUOUS INSPECTIONS ARE MADE OF WORK IN PROGRESS, AND A VISUAL INSPECTION OF ALL WELDS IS MADE PRIOR TO COMPLETION OR PRIOR TO SHIPMENT OF SHOP WELDING:

SPECIAL INSPECTIONS (cont'd)

1. FLOOR AND ROOF DECK WELDING.
2. WELDED STUDS WHEN USED FOR STRUCTURAL DIAPHRAGM OR COMPOSITE SYSTEMS.
3. WELDED SHEET STEEL FOR COLD-FORMED STEEL FRAMING MEMBERS SUCH AS STUDS AND JOISTS WHICH ARE NOT PART OF AN ORDINARY MOMENT FRAME.
4. WELDING OF STAIRS AND RAILING SYSTEMS.

N.A. 5.2 SPECIAL MOMENT-RESISTING STEEL FRAMES. DURING THE WELDING OF SPECIAL MOMENT-RESISTING STEEL FRAMES. IN ADDITION TO ITEM 5.1 REQUIREMENTS, NONDESTRUCTIVE TESTING AS REQUIRED BY SECTION 1703A AND CHAPTER 22A, DIVISION XII, SECTION 2231A OF THIS CODE.

5.3 WELDING OF REINFORCING STEEL. DURING THE WELDING OF REINFORCING STEEL. SEE CHAPTER 19A, DIVISION IX, SECTION 1929A FOR ADDITIONAL REQUIREMENTS.

6. HIGH-STRENGTH BOLTING. SPECIAL INSPECTOR REQUIRED. THE INSPECTION OF HIGH-STRENGTH A 325 AND A 490 BOLTS SHALL BE IN ACCORDANCE WITH THE STANDARDS ADOPTED AS PART OF THIS CODE, APPROVED NATIONALLY RECOGNIZED STANDARDS AND THE REQUIREMENTS OF THIS SECTION.

   WHILE THE WORK IS IN PROGRESS, THE SPECIAL INSPECTOR SHALL DETERMINE THAT THE REQUIREMENTS FOR BOLTS, NUTS, WASHERS AND PAINT; BOLTED PARTS, AND INSTALLATION AND TIGHTENING IN SUCH STANDARDS ARE MET. THE SPECIAL INSPECTOR SHALL OBSERVE THE CALIBRATION PROCEDURES WHEN SUCH PROCEDURES ARE REQUIRED BY THE PLANS OR SPECIFICATIONS AND SHALL MONITOR THE INSTALLATION OF BOLTS TO DETERMINE THAT ALL PLIES OF CONNECTED MATERIALS HAVE BEEN DRAWN TOGETHER AND THAT THE SELECTED PROCEDURE IS PROPERLY USED TO TIGHTEN ALL BOLTS.

N.A.
7. STRUCTURAL MASONRY. SPECIAL INSPECTOR REQUIRED.
7.1 FOR MASONRY, DURING PREPARATION AND TAKING OF ANY REQUIRED PRISMS OR TEST SPECIMENS, PLACING OF ALL MASONRY UNITS, PLACEMENT OF REINFORCEMENT, INSPECTION OF GROUT SPACE, IMMEDIATELY PRIOR TO CLOSING OF CLEANOUTS, AND DURING ALL GROUTING OPERATIONS. SEE SECTION 2105A FOR ADDITIONAL REQUIREMENTS.
8. REINFORCED GYPSUM CONCRETE. WHEN CAST-IN-PLACE CLASS B GYPSUM CONCRETE IS BEING MIXED AND PLACED. SEE CHAPTER 19A, DIVISION IX, SECTION 1929A FOR ADDITIONAL REQUIREMENTS.
9. INSULATING CONCRETE FILL. DURING THE APPLICATION OF INSULATING CONCRETE FILL WHEN USED AS PART OF STRUCTURAL SYSTEM. SEE CHAPTER 19A, DIVISION IX, SECTION 1929A FOR ADDITIONAL REQUIREMENTS.

10. SPRAY-APPLIED FIRE-RESISTIVE MATERIALS. AS REQUIRED BY UBC STANDARD 7-6.

N.A.
11. PILING, DRILLED PIERS AND CAISSONS. SPECIAL INSPECTOR REQUIRED. DURING DRIVING AND TESTING OF PILES AND CONSTRUCTION OF CAST-IN-PLACE DRILLED PILES OR CAISSONS. SEE ITEMS 1 AND 4 FOR CONCRETE AND REINFORCING STEEL INSPECTION. SEE ALSO CHAPTER 18A, DIVISION I, SECTION 1809A, CHAPTER 19A, DIVISION IX, SECTION 1929A, AND CHAPTER 22A, DIVISION XII, SECTION 2231A FOR ADDITIONAL REQUIREMENTS.
12. SHOTCRETE. SPECIAL INSPECTOR REQUIRED. DURING THE TAKING OF TEST SPECIMENS AND PLACING OF ALL SHOTCRETE AND AS REQUIRED BY SECTIONS 1924A.10 AND 1924A.11. SEE CHAPTER 19A, DIVISION IX, SECTION 1929A FOR ADDITIONAL REQUIREMENTS.
13. SPECIAL GRADING, EXCAVATION AND FILLING. DURING EARTH-WORK EXCAVATIONS, GRADING AND FILLING OPERATIONS INSPECTION TO SATISFY REQUIREMENTS OF CHAPTER 18A AND APPENDIX CHAPTER 33.

THE ABOVE TESTING AGENCY SHALL BE RETAINED BY THE OWNER.

FOUNDATIONS

1. REFER TO GEOTECHNICAL INVESTIGATION REPORT PREPARED BY TERRASEARCH INCORPORATED REVISED 23, FEBRUARY, 2000 FOR DESIGN SOIL PROPERTIES, DESIGN RECOMMENDATIONS, FIELD DATA, SITE PREPARATION, AND LABORATORY TESTS OF THE SOILS. GEOTECHNICAL CONSULTANT SHALL OBSERVE ALL SITE WORK & FOUNDATION PHASES OF CONSTRUCTION FOR CONFORMANCE TO CONDITIONS & RECOMMENDATIONS CONTAINED WITHIN THE SOIL REPORT.
2. SOIL BEARING CAPACITIES

A.	DEAD AND LIVE LOADS	2500 PSF FOR CONTINUOUS FOOTING 2800 PSF FOR SPREAD FOOTING
B.	TOTAL LOADS INCLUDING WIND OR SEISMIC LOADS	3333 PSF FOR CONTINUOUS FOOTING 3733 PSF FOR SPREAD FOOTING
C.	COEFFICIENT OF FRICTION	0.35
D.	EQUIVALENT FLUID PRESSURE FOR RETAINING WALLS	ACTIVE CONDITION = $40pcf + \frac{1.5\ pcf\ (SLOPE)}{2}$ + SURCHARGE AT REST = 60pcf + SURCHARGE UNDRAINED = 63pcf + SURGARGE PASSIVE CONDITION = 300pcf + SURGARGE

3. SHORE ALL EXCAVATIONS AS REQUIRED TO PREVENT SUBSIDENCE OR DAMAGE TO ADJACENT EXISTING STRUCTURES, STREETS, UTILITIES, ETC. CONTRACTOR TO RETAIN PROFESSIONAL ENGINEERING CONSULTANTS FOR THE DESIGN OF ALL SHORING.
4. UTILITY OR PLUMBING LINES SHALL NOT BE PLACED THROUGH OR BELOW PILE CAP OR FOOTING FOUNDATIONS WITHOUT THE ENGINEER'S APPROVAL.

CONCRETE

1. PER 1998 CBC, CHAPTER 19A, DIVISION I-GENERAL, SECTION 1900A.2 GENERAL REQUIREMENTS, ALL CONCRETE STRUCTURES SHALL BE DESIGNED AND CONSTRUCTED IN ACCORDANCE WITH THE REQUIREMENTS OF DIVISION II AND THE ADDITIONAL REQUIREMENTS CONTAINED IN SECTION 1900A.4 OF THIS DIVISION.
2. ALL CAST-IN-PLACE SHALL HAVE A MINIMUM 28-DAY COMPRESSIVE STRENGTH f'c = 3,000 PSI. THE CONCRETE MIX SHALL BE PROPORTIONED AND DOCUMENTED IN ACCORDANCE WITH SPECIFIED REQUIREMENTS.
3. PORTLAND CEMENT, ASTM C150
   CONCRETE IN CONTACT WITH THE GROUND SHALL BE COMPOSED OF APPROVED MIX DESIGNS WITH EITHER TYPE II CEMENT & A WATER/CEMENT RATIO < 0.45 OR TYPE V (SULFATE RESISTING) CEMENT.
4. REINFORCING STEEL SHALL BE DEFORMED BARS CONFORMING TO ASTM A615, GRADE 60, WELDED WIRE FABRIC SHALL CONFORM TO ASTM A185. WHERE REBAR IS SHOWN TO BE WELDED, IT SHALL CONFORM TO ASTM A706, GRADE 60. SUBMIT A REPORT OF MATERIAL PROPERTIES NECESSARY TO CONFORM TO REQUIREMENTS IN UBC STANDARD 19-1.
5. ALL REINFORCING LAP SPLICES SHALL CONFORM TO ACI CLASS B SPLICES, WITH THE REQUIRED INCREASE IN LENGTH FOR TOP BARS, UNLESS OTHERWISE NOTED ON THE DRAWINGS. STAGGER ALL LAP SPLICES IN ADJACENT BARS ONE LAP LENGTH MINIMUM.
6. WHERE REINFORCING BAR COUPLERS ARE INDICATED-PROVIDE MECHANICAL COUPLER DEVICES WHICH SUPPLY 125% OF THE YIELD STRENGTH OF THE BARS BEING JOINED. SUBMIT ICBO REPORT FOR MECHANICAL COUPLERS TO BE USED & STRICTLY FOLLOW MANUFACTURERS INSTRUCTIONS & RECOMMENDATIONS DURING INSTALLATIONS.
7. TYPICAL CONCRETE FINISHES: SEE SPECIFICATIONS.
8. MINIMUM CONCRETE COVER OVER REINFORCING STEEL:

a.	FORMED SURFACES EXPOSED TO EARTH	3"
b.	SURFACES EXPOSED TO WEATHER	3"
c.	SURFACES POURED AGAINST GROUND	3"
d.	COLUMNS TO TIES AND SPIRALS	2"
e.	BEAMS TO STIRRUPS	2"
f.	EXTERIOR WALLS AT INTERIOR FACE	1 1/2"
g.	ALL OTHER WALLS	1 1/2"

9. ADMIXTURES TO BE USED IN CONCRETE SHALL BE SUBJECT TO PRIOR APPROVAL BY THE ENFORCEMENT AGENCY.
10. PER 1905A.1.1, CONCRETE SHALL BE PROPORTIONED TO PROVIDE A REQUIRED AVERAGE COMPRESSIVE STRENGTH f'cr AS PRESCRIBED IN SECTION 1905A.3.2 AND SATISFY THE DURABILITY CRITERIA OF SECTION 1904A. CONCRETE SHALL BE PRODUCED TO MINIMIZE FRQUENCY OF STRENGTH BELOW f'c AS PRESCRIBED IN SECTION 1905A.6.2.3.

CONCRETE FORMWORK

1. ALL TEMPORARY SHORING AND RESHORING SHALL BE DESIGNED BY THE CONTRACTOR'S PROFESSIONAL ENGINEER CONSULTANT, AND SHALL CONFORM TO THE PROVISIONS OF ACI 301 "SPECIFICATIONS FOR STRUCTURAL CONCRETE FOR BUILDINGS", ACI 347 "RECOMMENDED PRACTICE FOR CONCRETE FORMWORK", AND 1998 CBC SECTION 1906A.1 DESIGN OF FORMWORK.

CONCRETE FORMWORK (cont'd)

2. SECURELY BRACE AND SHORE FORMS TO PREVENT DISPLACEMENTS, CARRY CONSTRUCTION LOADS AND SAFELY SUPPORT THE CONCRETE WITHOUT DISTORTION UNTIL SET. TOLERANCES SHALL BE AS SPECIFIED IN ACI STANDARD 347.
3. REMOVAL OF FORMS AND SUPPORTS SHALL BE IN ACCORDANCE WITH STANDARD ACI 347 AND 1998 CBC SECTION 1906A.2 REMOVAL OF FORMS, SHORES, AND RESHORING. WHERE CONCRETE MUST SUPPORT CONSTRUCTION LOADS PRIOR TO ATTAINING THE SPECIFIED DESIGN STRENGTH. RESHORE CONCRETE IN ACCORDANCE WITH ACI 347. RESHORING SHALL NOT BE REMOVED SOONER THAN 28 DAYS FROM THE DATE OF POUR OR UNTIL FIELD CURED CYLINDERS HAVE ATTAINED THE SPECIFIED DESIGN STRENGTH.

STRUCTURAL STEEL

1. PER 1998 CBC, SECTION 2205A,2, STRUCTURAL STEEL CONSTRUCTION SHALL BE IN ACCORDANCE WITH THE REQUIREMENTS OF DIVISION III FOR ALLOWABLE STRESS DESIGN.
2. STRUCTURAL STEEL SHALL CONFORM TO ASTM A572, GRADE 50 UNLESS NOTED OTHERWISE.
   ALL BEAMS SHALL CONFORM TO ASTM A572 GRADE 50 STEEL
   STRUCTURAL TUBING SHALL CONFORM TO ASTM A500 GRADE B.
   ALL PIPE SECTIONS SHALL CONFORM TO ASTM A53, GRADE B, TYPE E OR S.
   SCHEDULE 40 DESIGNATES STANDARD PIPE, SCHEDULE 80 DESIGNATES EXTRA STRONG PIPE.
3. UNLESS NOTED ON PLANS & ELEVATIONS AND ALL CONNECTING,CONTINUITY, GUSSET, BASE PLATE & STIFFENER PLATES ON GRADE 50 COLUMNS & BEAMS SHALL BE ASTM A572-GRADE 50.
4. ALL STRUCTURAL STEEL SHALL BE FABRICATED AND ERECTED IN CONFORMANCE WITH THE AISC MANUAL OF STEEL CONSTRUCTION 9TH EDITION.
5. UNLESS NOTED OTHERWISE ALL BOLTS SHALL BE 7/8 INCH DIAMETER HIGH STRENGTH BOLTS CONFORMING TO ASTM A325. MACHINE BOLTS (MB) SHALL CONFORM TO ASTM A307. ALL A325 BOLTS SHALL BE TYPE N, TIGHTENED SNUG TIGHT UNLESS NOTED AS CONNECTIONS FOR SEISMIC/WIND RESISTING BRACED FRAMES (SEE S2.1, S2.2, S2.3, S3.1, S3.2) OR CHORD/COLLECTOR CONNECTIONS WHERE BOLT TIGHTENING SHALL PROVIDE BOLT TENSIONING AS FOR SLIP-CRITICAL BOLTS. LOAD INDICATING WASHERS SHALL BE USED AT ALL SLIP-CRITICAL HIGH STRENGTH BOLTED CONNECTIONS. AS AN ALTERNATE, TENSION CONTROL FASTENERS CAN BE USED AT SC CONNECTIONS. THE TENSION CONTROL FASTENERS SHALL BE SUPPLIED AS AN ASSEMBLED UNIT COMPRISED OF TENSION CONTROL BOLT, WASHER AND GRADE 2H HEAVY HEX NUT.
6. ALL WELDS SHALL CONFORM TO AWS D1.1, E70XX LOW HYDROGEN ELECTRODES, EXCEPT THAT WELDING OF METAL DECK SHALL CONFORM TO AWS D1.3, E60XX ELECTRODES. ALL WELDING SHALL BE PERFORMED BY CERTIFIED WELDERS.
7. ALL STRUCTURAL STEEL EXCEPT SURFACES AND ANCHORS ENCASED IN CONCRETE, SURFACES TO BE GROUTED AGAINST, FAYING SURFACES AT HIGH STRENGTH SLIP-CRITICAL-TYPE BOLTED (A325SC) CONNECTIONS, SURFACES TO BE FIREPROOFED AND SURFACES TO BE WELDED, SHALL BE PRIME PAINTED WITH A MINIMUM DRY FILM THICKNESS OF 3 MILS.
8. ALL ANCHOR BOLTS (AB) SHALL CONFORM TO ASTM A449, SEE PLANS & DETAILS.
9. STRUCTURAL STEEL SHOP DRAWINGS SHALL BE SUBMITTED TO THE ENGINEER FOR REVIEW PRIOR TO FABRICATION.
10. SHOP DRAWINGS ARE AN AID FOR FIELD PLACEMENT AND ARE SUPERSEDED BY THE APPROVED STRUCTURAL DRAWINGS, IT SHALL BE CERTAIN THAT ALL CONSTRUCTION IS IN FULL AGREEMENT WITH THE LATEST APPROVED STRUCTURAL DRAWINGS.
11. BEAMS AND JOISTS SHALL BE MANUFACTURED WITHOUT DEAD LOAD CAMBER U.N.O. ON PLANS, ALL BEAMS AND JOISTS SHALL BE MANUFACTURED WITHIN THE CAMBER, SWEEP, DEPTH, AND WIDTH TOLERANCE REMITTED BY A.I.S.C. SPECIFICATION FOR STANDARD MILL TOLERANCE. BEAMS WITHOUT CAMBER SHALL BE INSTALLED WITH ANY NATURAL CROWN UP.
12. DRILLING (CUTTING. PUNCHING, ETC.) OF HOLES IN BEAM FLANGES IS NOT PERMITTED FOR ANY PURPOSE. SUPPORT METHOD FOR SUSPENDED EQUIPMENT (INCLUDING MECHANICAL EQUIPMENT, ETC.) SHALL BE APPROVED BY THE STRUCTURAL ENGINEER.
13. PENETRATION THROUGH WEBS OF COLUMNS, BEAMS, OR BRACES OF BRACED FRAMES IS NOT PERMITTED.
14. STRUCTURE SHALL HAVE TEMPORARY LATERAL SUPPORT UNTIL ALL DIAGONAL BRACES HAVE BEEN WELDED.

STEEL DECKING

1. MATERIALS FOR STEEL DECK DIAPHRAGMS SHALL CONFORM TO THE REQUIREMENTS OF 1998 CBC, CHAPTER 22A, DIVISION VII AND SHALL BE IDENTIFIED IN ACCORDANCE WITH SECTION 2203A.3.
2. ROOF DECKING SHALL BE BY VULCRAFT & SHALL BE GALVANIZED. USE ACOUSTICAL DECK TYPE 3N18, 3 IN. DEEP, 18 GAUGE, Fy=33 KSI, ICBO APPROVED (No. 3415) FOR THE MULTI PURPOSE ROOM ROOF USE ACOUSTICAL DECK TYPE 1.5 BIA 1/1/2 INCHES DEEP, 18 GAUGE, Fy=33KSI, 3/4"ø PUDDLE WELDS. ICBO APPROVED (No. 3415) FOR ALL OTHER BUILDING ROOFS.
3. ALL SHORING OF METAL DECK SHALL BE PER MANUFACTURER'S REQUIRMENT.
4. STEEL DECK SUPPORT SHALL BE AS FOLLOWS:
   FOR TYPE 1.5BIA USE 3/4" PUDDLE WELDS IN A 36/4 PATTERN AT ALL SUPPORTS.
   FOR TYPE 3N18 USE 3/4" PUDDLE WELDS IN A 24/4 PATTERN AT ALL SUPPORTS.
   FOR 510 FLAP FASTENERS USE 3/8"X1 1/2" ARC SEAM WELDS @ 2'-0"O.C. FOR BOTH TYPE 1.5BIA AND 3N18. TO DECK SPAN USING 3/4"ø PUDDLE WELDS @16"O.C. @ DECK PARALLEL TO SUPPORT AND 4 PUDDLE WELD PER SHEET AT DECK PERPENDICULAR TO DECK SPAN.

ABBREVIATIONS:

AB	ANCHOR BOLT
ADDL	ADDITIONAL
AL	ALUMINUM
ALT	ALTERNATE
ARCH	ARCHITECTURAL
BOC	BOTTOM OF CONCRETE
BOS	BOTTOM OF STEEL
BOT	BOTTOM
BLW	BELOW
BM	BEAM
BRG	BEARING
BS	BOTH SIDES
BTWN	BETWEEN
C/C	CENTER TO CENTER
CFMF	COLD FORM METAL FRAMING
CJ	CONSTRUCTION JOINT
CL	CENTER LINE
CHKD	CHECKERED
CIP	CAST-IN-PLACE
CLR	CLEAR
COL	COLUMN
CONC	CONCRETE
CONN	CONNECTION
CONT	CONTINUOUS
CTR	CENTER
CTRD	CENTERED
DBA	DEFORMED BAR ANCHOR
DEMO	DEMOLISH, DEMOLITION
DIA, ø	DIAMETER
DWG	DRAWING
EA	EACH
EE	EACH END
EF	EACH FACE
EFP	EQUIVALENT FLUID PRESSURE
EL, ELEV	ELEVATION
EOD	EDGE OF DECK
EOS	EDGE OF SLAB
EQ SPC	EQUALLY SPACED
EW	EACH WAY
EXP JT	EXPANSION JOINT
(E), EXST	EXISTING
FD	FLOOR DRAIN
FDN	FOUNDATION
FF	FINISH FLOOR
FG	TOP OF FINISH GRADE
FIN GRD	FINISHED GRADE
FLG	FLANGE
FLR	FLOOR
FRMG	FRAMING
FS	FAR SIDE
FTG	FOOTING
GALV	HOT DIP GALVANIZED
GB	GRADE BEAM
GRT	GROUT
GRTG	GRATING
GS	GALVANIZED STEEL
(H)	HIGH
HCA	HEADED CONCRETE ANCHOR
HORIZ	HORIZONTAL
HKS	HOOKS
ID	INSIDE DIAMETER
IF	INSIDE FACE
INFO	INFORMATION
KSF	KIPS PER SQUARE FOOT
(L)	LOW
LONG	LONGITUDINAL
LLH	LONG LEG HORIZ.
LLV	LONG LEG VERT.
LSH	LONG SLOTTED HOLE
MFR	MANUFACTURER
MAX	MAXIMUM
MECH	MECHANICAL
MB	MACHINE BOLTS
MIN	MINIMUM
(N)	NEW
NDT	NON-DESTRUCTIVE TESTING
NG	TOP OF NATURAL GRADE
NIC	NOT IN CONTRACT
NS	NEAR SIDE
NTS	NOT TO SCALE
O/	ON, ON TOP OF
OC	ON CENTER
OD	OUTSIDE DIAMETER
OH	OPPOSITE HAND
OF	OUTSIDE FACE
O/O	OUT TO OUT
OPNG	OPENING
OPP	OPPOSITE
OSH	OVERSIZED HOLE
PLCS	PLACES
PC	PRECAST, PIECE
PCF	POUND PER CUBIC FOOT
PJF	PREMOLDED JOINT FILLER
P	PLATE
PROJ	PROJECTION
PSF	POUND PER SQUARE FOOT
PVC	POLYVINYL CHLORIDE
RD	ROOF DRAIN
REINF	REINFORCING
REQ'D	REQUIRED
RT	RADIOGRAPHIC TESTING
RTN	RETURN
SAD	SEE ARCHITECTURAL DRAWINGS
SCHED	SCHEDULE
SHT	SHEET
SIB	STRUCTURAL ISOLATION BREAK
SIM	SIMILAR
SOG	SLAB-ON-GRADE
SPCG	SPACING
SPECS	SPECIFICATIONS
SQ	SQUARE
SS	STAINLESS STEEL
SSH	SHORT SLOTTED HOLE
STD	STANDARD
STIFF	STIFFENER
STL	STEEL
SW	SHEAR WALL
SYM	SYMMETRICAL
T & B	TOP AND BOTTOM
TB	TIE BEAM
TC	TOP OF CURB
TFE	TOP OF FOOTING ELEVATION
THK	THICK
TJ	TOOLED JOINT
TOC	TOP OF CONCRETE
TOF	TOP OF FOOTING
TOG	TOP OF GRATE
TOS	TOP OF STEEL
TP	TOP OF PAVING
TRANS	TRANSVERSE
TS	TOP OF SLAB
TW	TOP OF WALL
TYP	TYPICAL
UNO	UNLESS NOTED OTHERWISE
UT	ULTRASONIC TESTING
VERT	VERTICAL
W/	WITH
W.O.	WHERE OCCURS
WS	WATERSTOP
WWF	WELDED WIRE FABRIC
VIF	VERIFY IN FIELD

LEGEND:

- NEW COLUMN
- NEW COLUMN
- NEW CONCRETE WALL
- NEW STRUCTURE
- NEW STRUCTURE (HIDDEN)
- MOMENT RESISTING CONNECTION
- INDICATES NEW FOUNDATION TYPE. SEE FOUNDATION SCHEDULE 1/S5.1
- F-5 268'-0" (INDICATES TOP OF NEW FOOTING ELEVATION, REFERS TO DETAIL 13/S5.1)
- INDICATES CHANGE IN GRADE/SLAB ELEVATION
- 1/– DETAIL LOCATED ON SAME SHEET
- 1/S-13.1 ON PLANS: INDICATES SHEET THE DETAIL IS SHOWN ON
- 1/– INDICATES SECTION LOCATED ON SAME SHEET
- 1/S-13.1 ON PLANS OR DETAILS: INDICATES SHEET THE SECTION IS SHOWN ON
- EARTH
- CONCRETE
- GRAVEL
- ROCK
- Y/X INDICATES AWS WELD SYMBOLS AS NOTED. WHERE SIZE IS SHOWN ON ONLY THE "X" SIDE - IT SHALL ALSO APPLY TO THE "Y" SIDE, UNLESS NOTED.
- W24x55-20 (+1 1/2") — NUMBERS OF SHEAR STUDS FOR STEEL COMPOSITE BEAMS 3/4"øxHEIGHT=DEPTH OF DECK PLUS STRUCTURAL CONCRETE FILL LESS 1". — CAMBER AT MIDSPAN, U.N.O.

DRAWING INDEX

S0.1 GENERAL NOTES
S2.1 BUILDING A: ADMINISTRATION PLANS BRACED FRAME ELEVATIONS
S2.2 BUILDING K: KINDERGARTEN PLANS, BRACED FRAME & TRUSS ELEVATIONS
S2.3 BUILDING L: LIBRARY PLANS, BRACED FRAME & TRUSS ELEVATIONS
S2.4 BUILDING M: MULTI-PURPOSE FOUNDATION/FLOOR PLAN
S2.5 BUILDING M: MULTI-PURPOSE ROOF FRAMING PLANS
S3.1 BUILDING M: MULTI-PURPOSE FRAME ELEVATIONS
S3.2 BUILDING M: MULTI-PURPOSE FRAME ELEVATIONS
S5.1 TYPICAL CONCRETE DETAILS
S5.2 CONCRETE DETAILS & SECTIONS
S5.3 CONCRETE DETAILS & SECTIONS
S7.1 TYPICAL STEEL DETAILS
S7.2 TYPICAL METAL DECK DETAILS
S7.3 STEEL DETAILS & SECTIONS
S7.4 STEEL DETAILS & SECTIONS
S7.5 STEEL DETAILS & SECTIONS
S7.6 BUILDING K: KINDERGARTEN STEEL DETAILS & SECTIONS
S7.7 BUILDING L: LIBRARY STEEL DETAILS & SECTIONS
S7.8 BUILDING A: ADMINISTRATION STEEL DETAILS AND SECTIONS
S7.9 STEEL DETAILS & SECTIONS

COPYRIGHT © 2000 HARLAN KRUSEMARK - ARCHITECT (HKA) THESE DRAWINGS ARE PROPRIETARY DOCUMENTS OF HKA AND ARE NOT TO BE DISTRIBUTED, PUBLISHED OR REPRODUCED WITHOUT WRITTEN PERMISSION OF HKA.

HKA
Harlan Krusemark - Architect
4415 Cowell Road, Suite 230
Concord, CA 94521
Tel: 925.681.1905
Fax: 925.681.1906

MFT Consulting Engineers
120 Howard Street, Suite 420
San Francisco, CA 94105
(415) 227-0880
Fax (415) 227-4663

Revisions | Date

HAWKINS SCHOOL
475 Darlene Lane
Tracy, CA 95377

Jefferson School District
7500 West Linne Road
Tracy, CA 95304

DSA FILE NO. 39-39
IDENTIFICATION STAMP
DIVISION OF THE STATE ARCHITECT
APPL 02 -102225
AC___ FLS___ SS CC
DATE AUG 2 4 2000

Sheet Title:
GENERAL NOTES

Printing Date / Purpose:
08/18/00 DSA APPROVAL

Scale: AS SHOWN
Project Number: 9903.00
Sheet Number:
S0.1
of Sheets

FILE: 99646-01

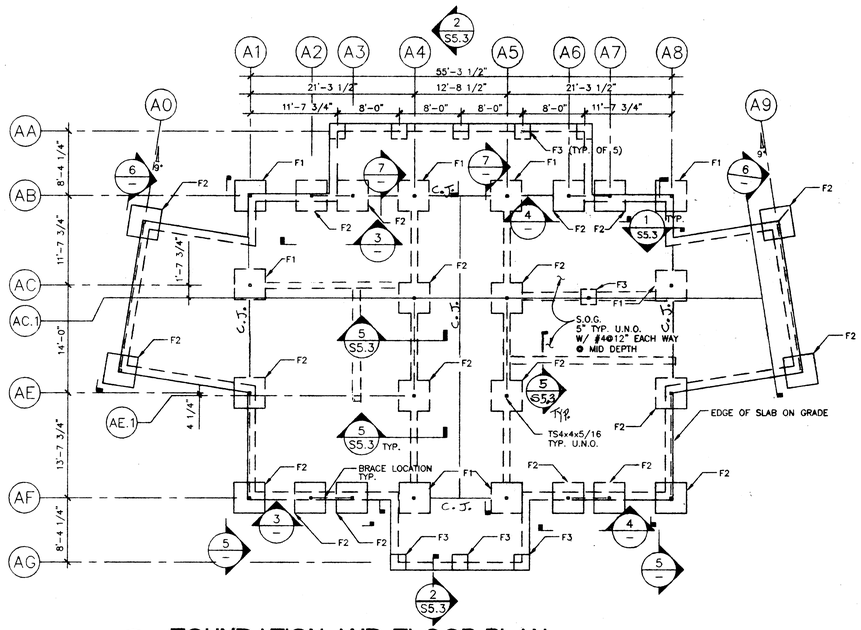

1 FOUNDATION AND FLOOR PLAN
1/8" = 1'-0"

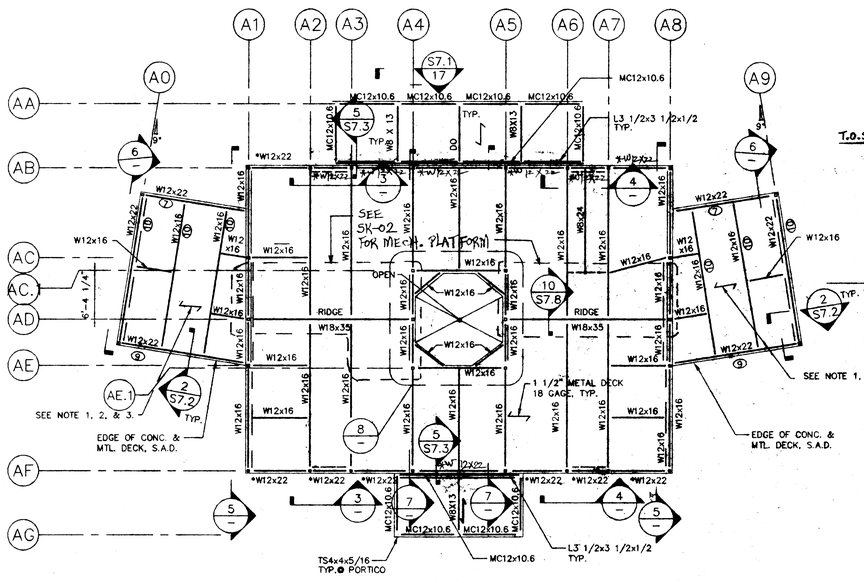

2 ROOF FRAMING PLAN
1/8" = 1'-0"

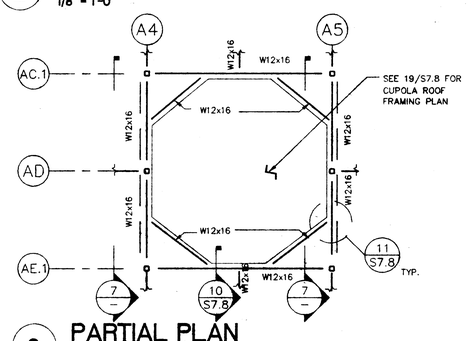

8 PARTIAL PLAN
1/4" = 1'-0"

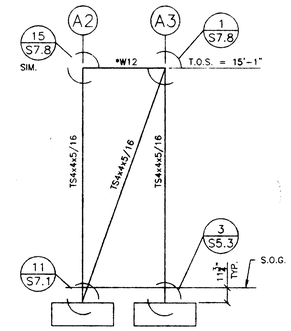

3 BRACED FRAME ELEV.
AT LINES AB AND AF
1/4"=1'-0"

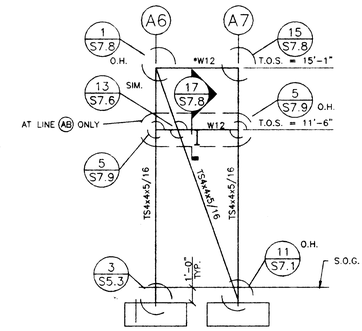

4 BRACED FRAME ELEV.
AT LINES AB AND AF
1/4"=1'-0"

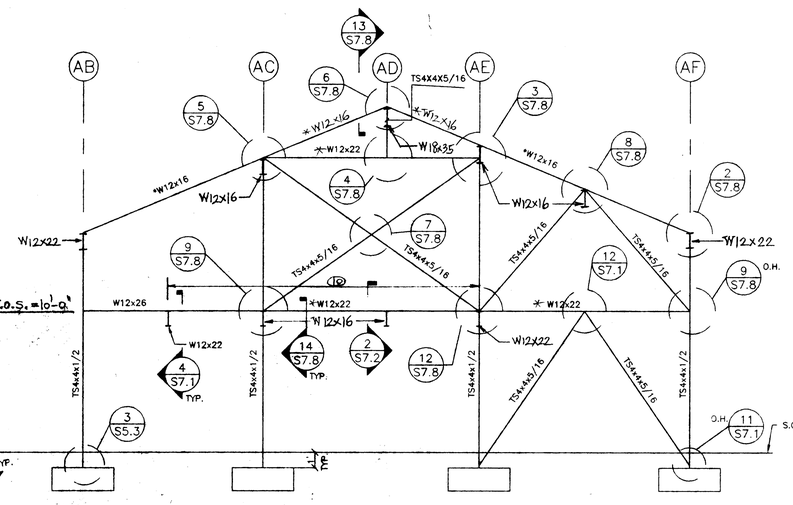

5 BRACED FRAME ELEV.
AT LINES A1 AND A8
1/4"=1'-0"

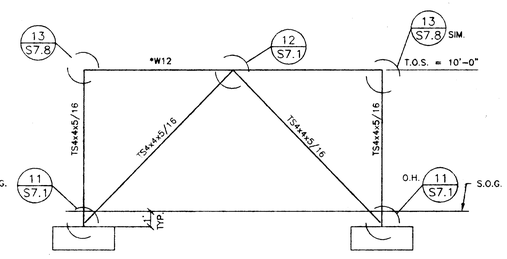

6 BRACED FRAME ELEV.
AT LINES A0 AND A9
1/4"=1'-0"

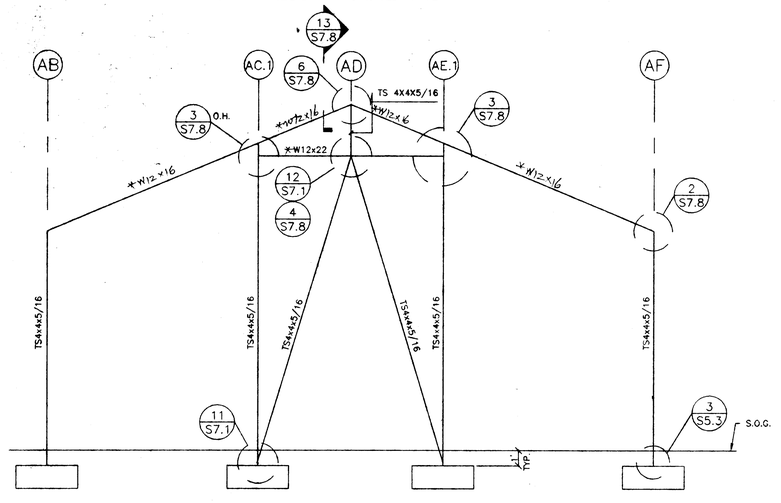

7 BRACED FRAME ELEV.
AT LINES A4 AND A5
1/4"=1'-0"

NOTES:

1. WHERE CONCRETE IS PRESENT WITH METAL DECK, THE METAL DECK SHALL BE 1.5 VLR DECK TYPE 18 GAGE BY VULCRAFT WITH 2 1/2" NORMAL WEIGHT CONCRETE WITH f'c = 4000 PSI AT 28 DAYS. PROVIDE REBARS # 4 @ 12" O.C. EACH WAY.
2. (7) INDICATES NUMBER OF 3/4" ø NELSON STUDS AS MANUFACTURED BY TRW. 1" MINIMUM CONCRETE COVER OVER THE STUDS.
3. EDGE OF DECK TO BE 12" MAX. FROM CENTER LINE OF STEEL BEAM S.A.D. FOR EXACT DIMENSIONS.
4. CHORDS/COLLECTORS ARE designated by *.
5. SEE 13/S5.1 FOR ISOLATED FOOTING SCHEDULE AND DETAIL.

HKA
Harlan Krusemark - Architect
4415 Cowell Road, Suite 230
Concord, CA 94521
Tel: 925.681.1905
Fax: 925.681.1906

LICENSED ARCHITECT — HARLAN KRUSEMARK — No. 9903 — STATE OF CALIFORNIA

MFT Consulting Engineers, Inc.
120 Howard Street, Suite 420
San Francisco, CA 94105
(415) 227-0880
FAX (415) 227-0883

REGISTERED PROFESSIONAL ENGINEER — MICHAEL FURD — E.C. 3188 — Exp. 6/30/02 — STATE OF CALIFORNIA

REGISTERED PROFESSIONAL ENGINEER — DENNIS J. BRODIGAN — SE 4346 — Exp. 9-30-03 — STATE OF CALIFORNIA

Revisions	Date

HAWKINS SCHOOL

475 Darlene Lane
Tracy, CA 95377

Jefferson School District
7500 West Linne Road
Tracy, CA 95304

DSA FILE NO. 39-39
IDENTIFICATION STAMP
DIVISION OF THE STATE ARCHITECT
APPL 02 -102225
AC ___ FLS ___ SS ___
DATE AUG 2 4 2000

Sheet Title:
BUILDING A: ADMINISTRATION
PLANS BRACED FRAME
ELEVATIONS

Printing Date / Purpose:
08/18/00 DSA APPROVAL

Scale: AS SHOWN
Project Number: 9903.00
Sheet Number:

S2.1

of Sheets

FILE: 99646-21

COPYRIGHT © 2000 HARLAN KRUSEMARK - ARCHITECT (HKA) THESE DRAWINGS ARE PROPRIETARY DOCUMENTS OF HKA AND ARE NOT TO BE DISTRIBUTED, PUBLISHED OR REPRODUCED WITHOUT WRITTEN PERMISSION OF HKA.

H:\PROJECTS\99646.1\DSA\DWGS\08-18-00DSA BKCK\99646-21a.dwg Sun Aug 20 16:08:59 2000

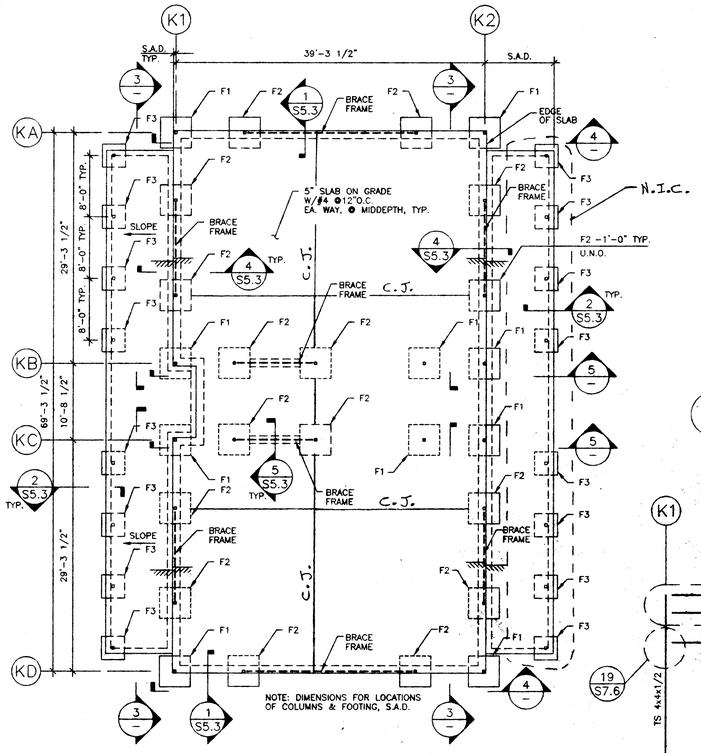

1 FOUNDATION AND FLOOR PLAN
1/8"=1'-0"

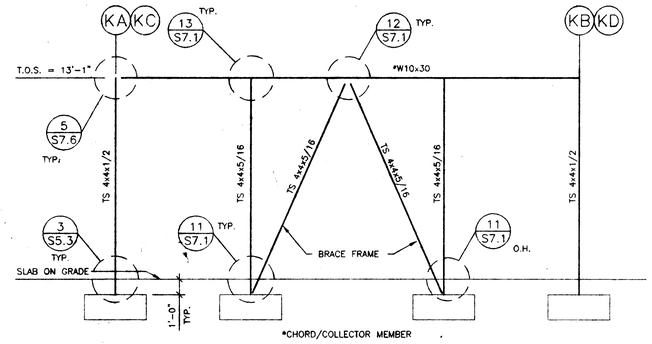

3 BRACED FRAME ELEV. AT LINES K1 AND K2
1/4"=1'-0"

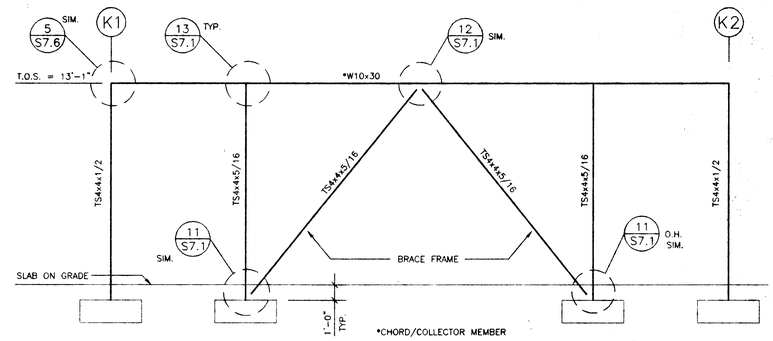

4 BRACED FRAME ELEV. AT LINES KA AND KD
1/4"=1'-0"

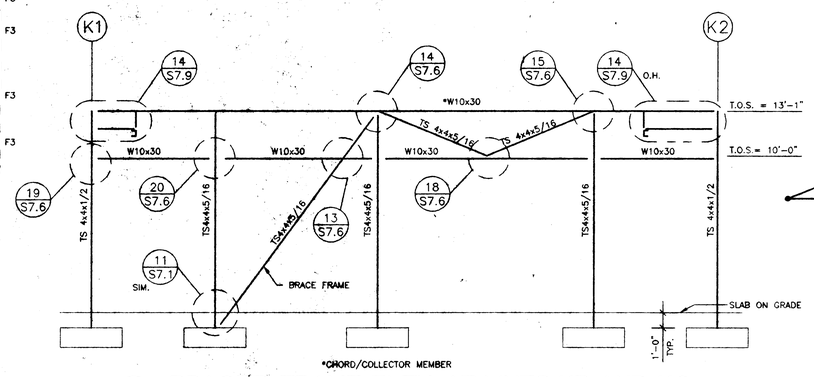

5 BRACED FRAME ELEV. AT LINES KB AND KC
1/4"=1'-0"

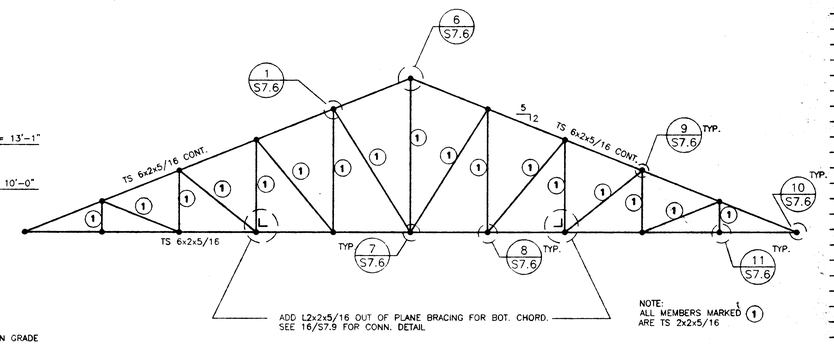

6 TRUSS "T1K"
1/4"=1'-0"

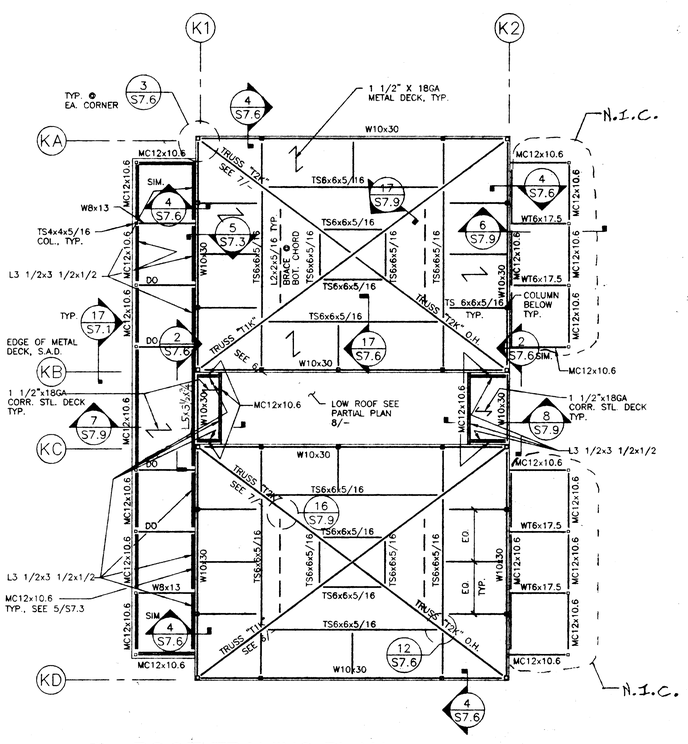

2 ROOF FRAMING PLAN
1/8"=1'-0"

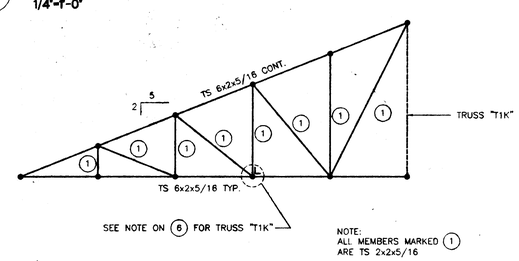

7 TRUSS "T2K"
1/4"=1'-0"

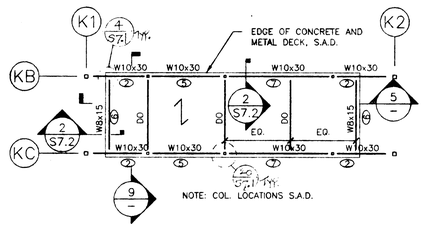

8 PARTIAL FRAMING PLAN
1/8"=1'-0"

NOTES:

1. WHERE CONCRETE IS PRESENT WITH METAL DECK, THE METAL DECK SHALL BE 1.5 VLR DECK TYPE 18 GAGE BY VULCRAFT WITH 2 1/2" NORMAL WEIGHT CONCRETE WITH f'c = 4000 PSI AT 28 DAYS. PROVIDE REBARS # 4 @ 12" O.C. EACH WAY.
2. (2) INDICATES NUMBER OF 3/4" ø NELSON STUDS AS MANUFACTURED BY TRW. 1" MINIMUM CONCRETE COVER OVER THE STUDS.
3. EDGE OF DECK TO BE 12" MAX. FROM CENTER LINE OF STEEL BEAM S.A.D. FOR EXACT DIMENSIONS.
4. SEE 13/S5.1 FOR ISOLATED FOOTING SCHEDULE AND DETAIL.

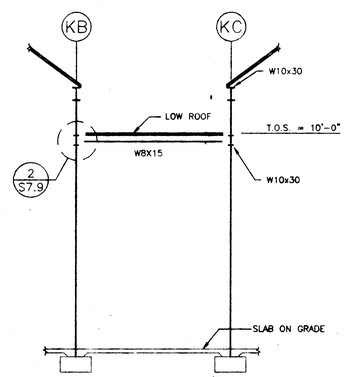

9 SECTION
1/8"=1'-0"

HKA
Harlan Krusemark - Architect
4415 Cowell Road, Suite 230
Concord, CA 94521
Tel: 925.681.1905
Fax: 925.681.1906

LICENSED ARCHITECT HARLAN KRUSEMARK No. 10000 Exp. 9/30/02 STATE OF CALIFORNIA

MFT Consulting Engineers Inc.
120 Howard Street, Suite 420
San Francisco, CA 94105
(415) 227-0882
Fax (415) 227-0883

REGISTERED PROFESSIONAL ENGINEER MICHAEL FORD SMITH No. S-3188 EXP. 9/30/02 STRUCTURAL STATE OF CALIFORNIA

REGISTERED PROFESSIONAL ENGINEER ROBERT T. BOSCHETTO No. GE 4346 EXP. 9-30-02 CIVIL STATE OF CALIFORNIA

Revisions | Date

HAWKINS SCHOOL

475 Darlene Lane
Tracy, CA 95377

Jefferson School District
7500 West Linne Road
Tracy, CA 95304

DSA FILE NO. 39-39
IDENTIFICATION STAMP
DIVISION OF THE STATE ARCHITECT
APPL 02 - 102225
AC FLS BS CO
DATE AUG 2 4 2000

Sheet Title:
BUILDING K: KINDERGARTEN
PLANS, BRACED FRAME &
TRUSS ELEVATIONS

Printing Date / Purpose:
08/18/00 DSA APPROVAL

Scale: AS SHOWN
Project Number: 99646
Sheet Number:

S2.2

of Sheets

FILE: 99646 - 21

COPYRIGHT © 2000 HARLAN KRUSEMARK - ARCHITECT (HKA) THESE DRAWINGS ARE PROPRIETARY DOCUMENTS OF HKA AND ARE NOT TO BE DISTRIBUTED, PUBLISHED OR REPRODUCED WITHOUT WRITTEN PERMISSION OF HKA.

h:\PROJECTS\Hawk Hrsc\DWGS\99646-22a.dwg Sun Aug 20 15:30:54 2000 BMCK\99646-22a

29

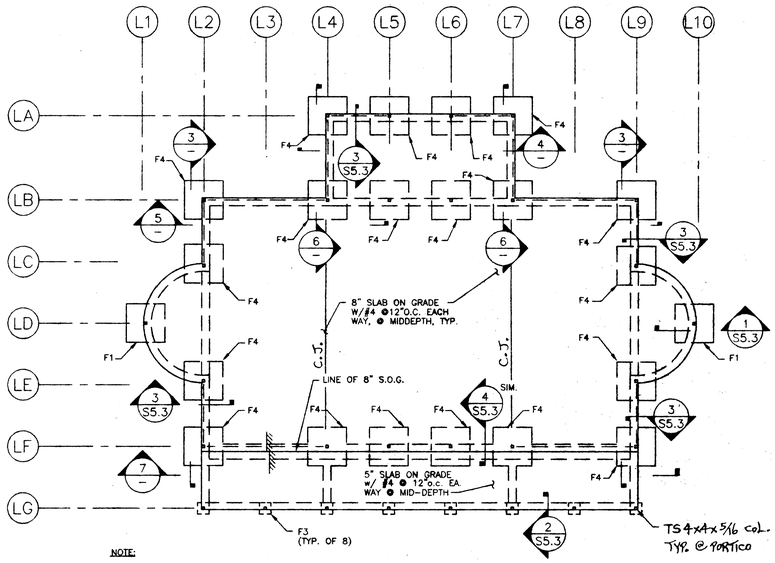

NOTE:

DIMENSIONS FOR LOCATIONS OF COLS. & FOUNDATIONS, S.A.D.

1 FOUNDATION AND FLOOR PLAN
1/8" = 1'-0"

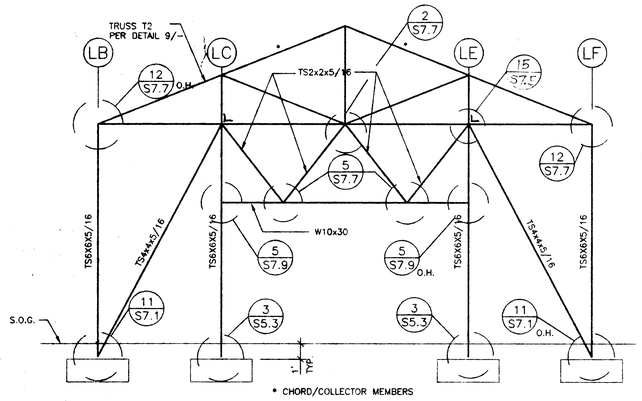

3 BRACED FRAME ELEV. AT LINES L2 AND L9
1/4" = 1'-0"

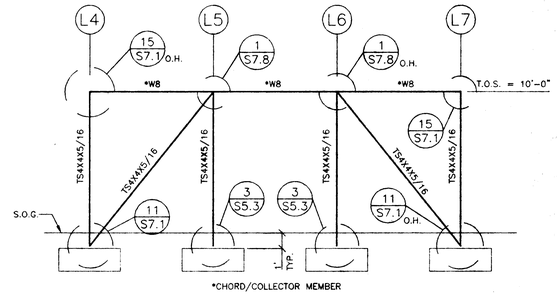

4 BRACED FRAME ELEV. AT LINE LA
1/4" = 1'-0"

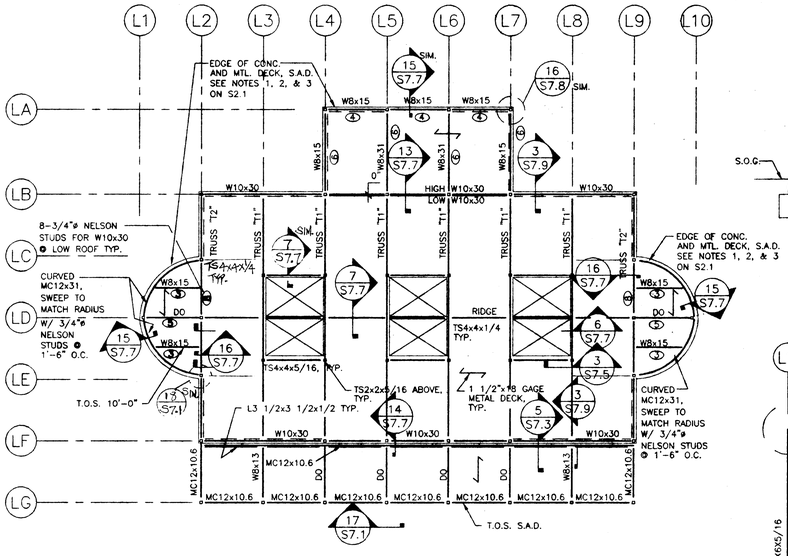

2 ROOF FRAMING PLAN
1/8" = 1'-0"

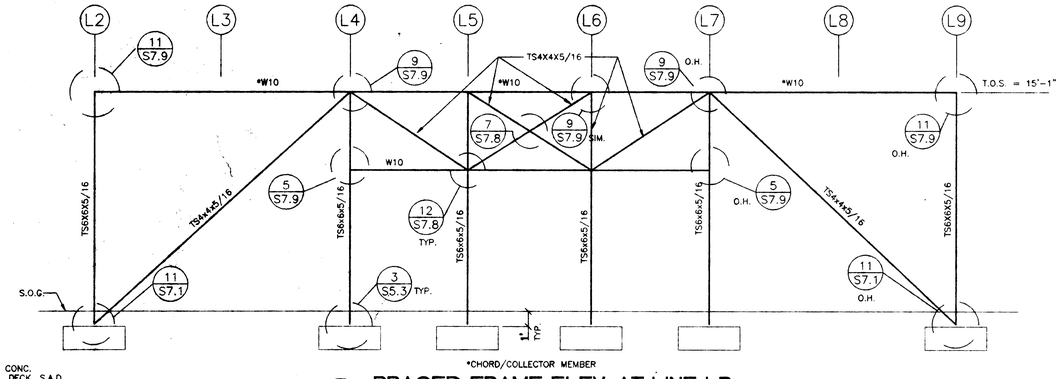

5 BRACED FRAME ELEV. AT LINE LB
1/4" = 1'-0"

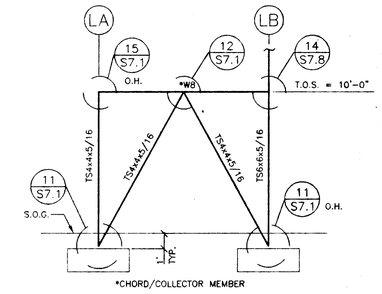

6 BRACED FRAME ELEV. AT LINES L4 AND L7
1/4" = 1'-0"

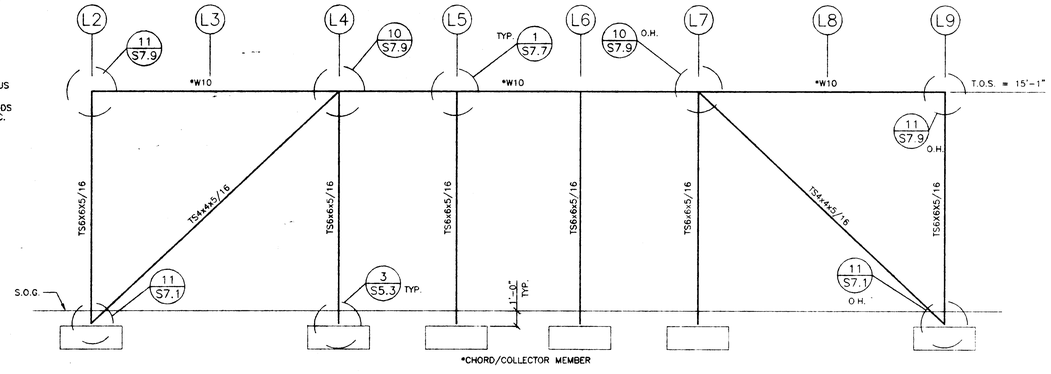

7 BRACED FRAME ELEV. AT LINE LF
1/4" = 1'-0"

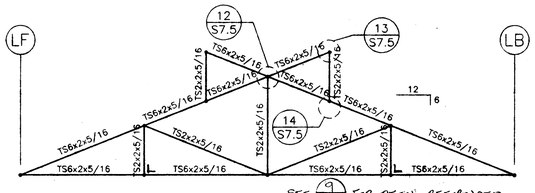

SEE 9/- FOR DETAIL REFERENCES NOT SHOWN

8 TRUSS "T1"
1/4" = 1'-0"

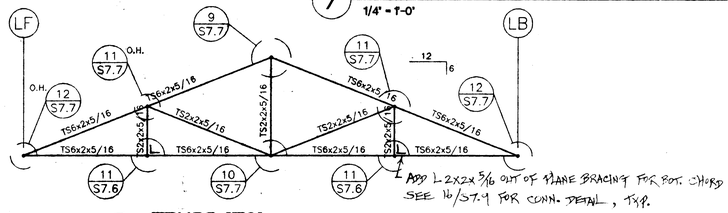

ADD L 2x2x3/16 OUT OF PLANE BRACING FOR BOT. CHORD SEE 16/S7.4 FOR CONN. DETAIL, TYP.

9 TRUSS "T2"
1/4" = 1'-0"

NOTES:

1. WHERE CONCRETE IS PRESENT WITH METAL DECK, THE METAL DECK SHALL BE 1.5 VLR DECK TYPE 18 GAGE BY VULCRAFT WITH 2 1/2" NORMAL WEIGHT CONCRETE WITH f'c = 4000 PSI AT 28 DAYS. PROVIDE REBARS # 4 @ 12" O.C. EACH WAY.
2. (2) INDICATES NUMBER OF 3/4" ø NELSON STUDS AS MANUFACTURED BY TRW. 1" MINIMUM CONCRETE COVER OVER THE STUDS.
3. EDGE OF DECK TO BE 12" MAX. FROM CENTER LINE OF STEEL BEAM S.A.D. FOR EXACT DIMENSIONS.
4. CHORDS/COLLECTORS ARE designated by *.
5. SEE 13/S5.1 FOR ISOLATED FOOTING SCHEDULE AND DETAIL.

HKA
Harlan Krusemark - Architect
4415 Cowell Road, Suite 230
Concord, CA 94521
Tel: 925.681.1905
Fax: 925.681.1906

MFT Consulting Engineers, Inc.
135 Hawaii Street, Suite 100
San Francisco, CA 94103
(415) 227-0200
Fax (415) 227-0463

Revisions | Date

HAWKINS SCHOOL

475 Darlene Lane
Tracy, CA 95377

Jefferson School District
7500 West Linne Road
Tracy, CA 95304

DSA FILE NO. 39-39
IDENTIFICATION STAMP
DIVISION OF THE STATE ARCHITECT
APPL 02 -102225
AC ___ RLS ___ SS CCC
DATE AUG 2 2 2000

Sheet Title:
BUILDING L: LIBRARY PLANS, BRACED FRAME & TRUSS ELEVATIONS

Printing Date / Purpose:
08/18/00 DSA APPROVAL

Scale: AS SHOWN
Project Number: 9903.00
Sheet Number:

S2.3

of Sheets

FILE 99646-22

COPYRIGHT © 2000 HARLAN KRUSEMARK - ARCHITECT (HKA) THESE DRAWINGS ARE PROPRIETARY DOCUMENTS OF HKA AND ARE NOT TO BE DISTRIBUTED, PUBLISHED OR REPRODUCED WITHOUT WRITTEN PERMISSION OF HKA.

H:\PROJECTS\Hawk Ins Sch\DWGS\08-18-00\SA BldG\99646-23a.dwg Sun Aug 20 15 34 47 2000

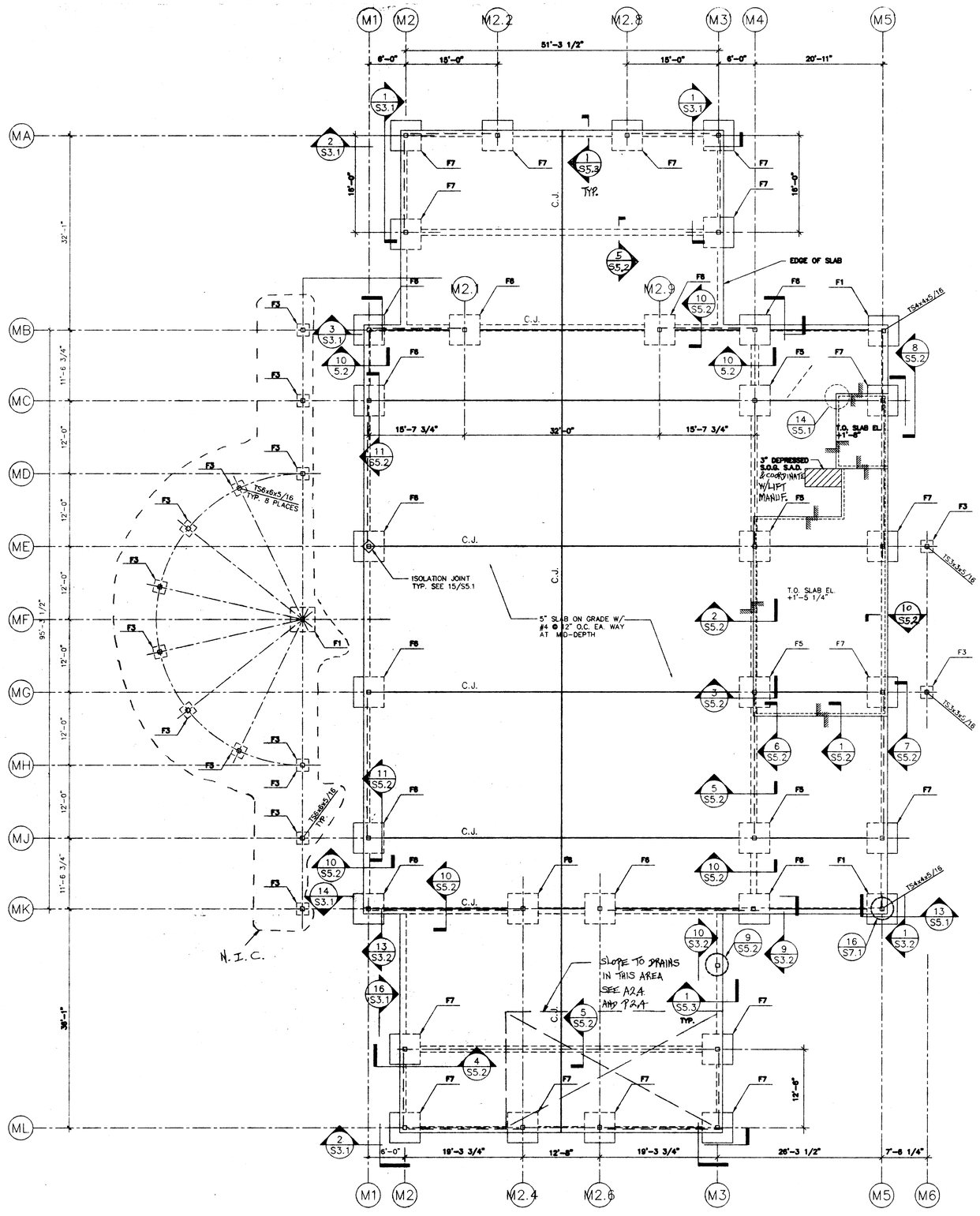

1 FOUNDATION/FLOOR PLAN
1/8" = 1'-0"

1. SEE SHEET S0.1 FOR GENERAL NOTES
2. TOP OF SLAB ON GRADE IS DATUM ELEVATION 0'-0", TYPICAL UNLESS NOTED OTHEWISE.
3. SEE FRAME ELEVATIONS FOR COLUMN SIZES NOT NOTED ON PLAN. SEE 13/S5.1 FOR ISOLATED FOOTING SCHEDULE.
4. UNLESS NOTED OTHERWISE ON PLAN AND ELEVATIONS, ALL TOP OF FOOTING ELEVATIONS ARE 1'-0" BELOW TOP OF SLAB ON GRADE.

2 FOUNDATION NOTES

HKA
Harlan Krusemark - Architect
4415 Cowell Road, Suite 230
Concord, CA 94521
Tel: 925.681.1905
Fax: 925.681.1906

Revisions Date

HAWKINS SCHOOL

475 Darlene Lane
Tracy, CA 95377

Jefferson School District
7500 West Linne Road
Tracy, CA 95304

DSA FILE NO. 39-39
IDENTIFICATION STAMP
DIVISION OF THE STATE ARCHITECT
APPL 02 -102225
AC
DATE AUG 2 4 2000

Sheet Title:
BUILDING M: MULTI-PURPOSE FOUNDATION/FLOOR PLAN

Printing Date / Purpose:
08/18/00 DSA APPROVAL

Scale: AS SHOWN
Project Number: 9903.00
Sheet Number:

S2.4
of Sheets

FILE: 99646-23

COPYRIGHT © 2000 HARLAN KRUSEMARK - ARCHITECT (HKA) THESE DRAWINGS ARE PROPRIETARY DOCUMENTS OF HKA AND ARE NOT TO BE DISTRIBUTED, PUBLISHED OR REPRODUCED WITHOUT WRITTEN PERMISSION OF HKA.

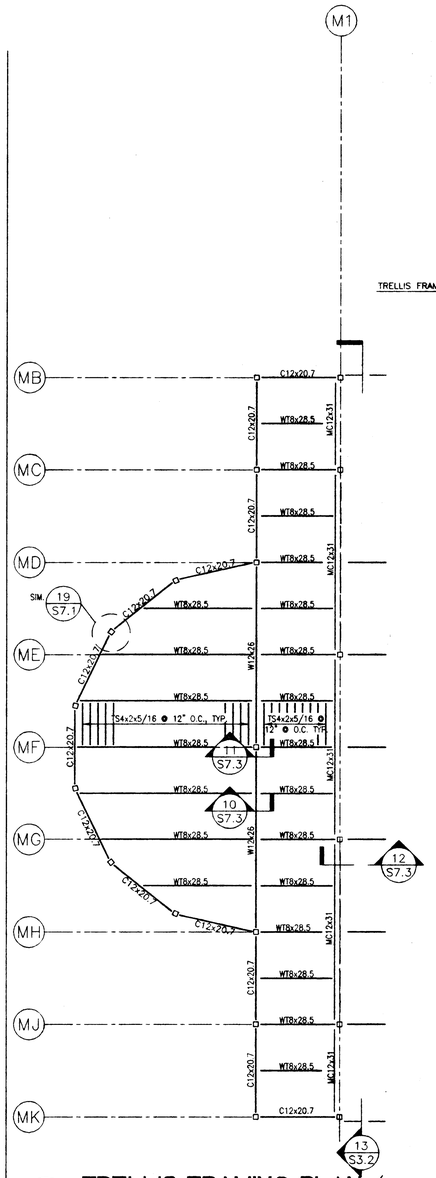

1 TRELLIS FRAMING PLAN (N. I. C.)

1/8" = 1'-0"

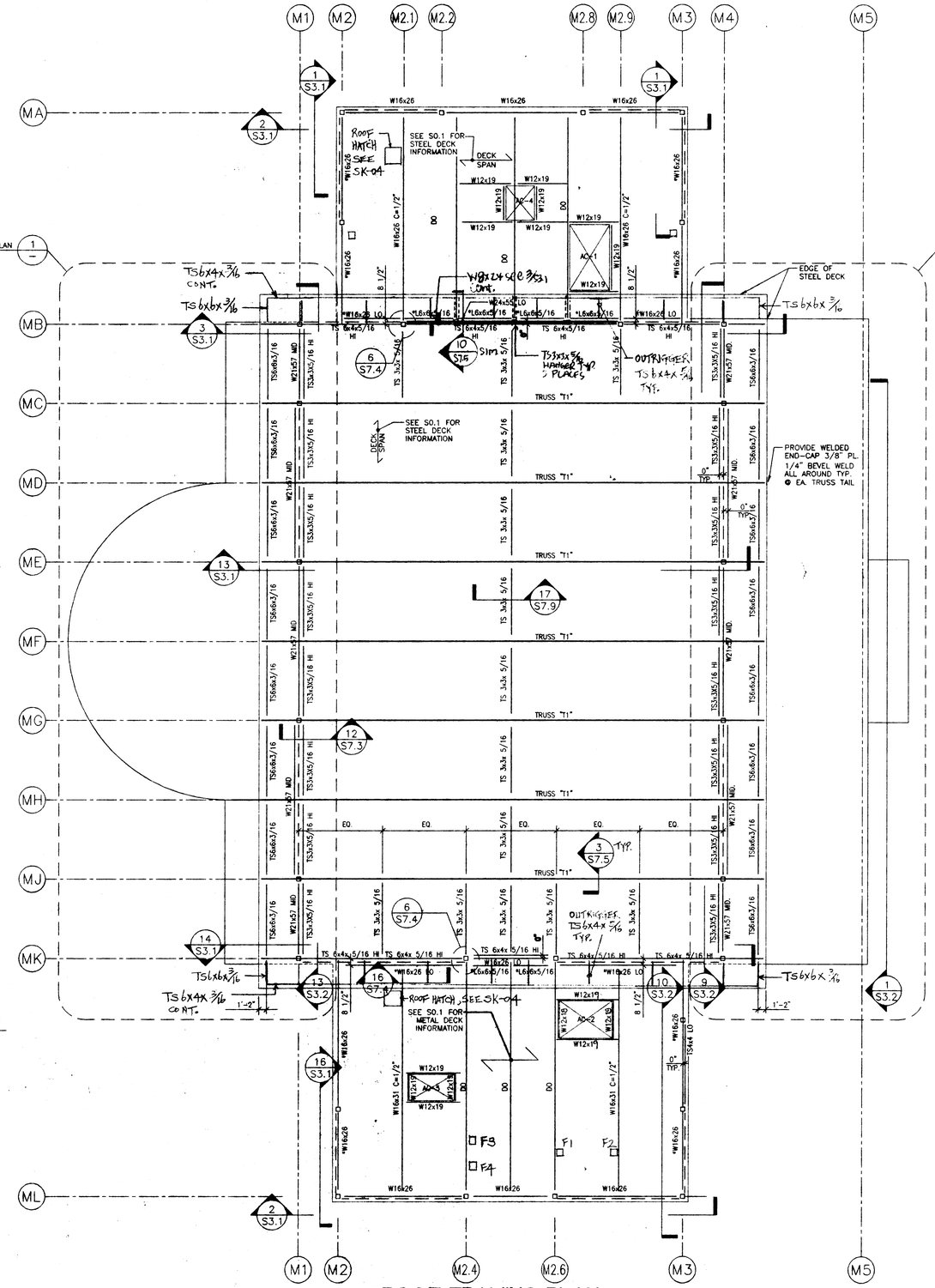

2 ROOF FRAMING PLAN

1/8" = 1'-0"

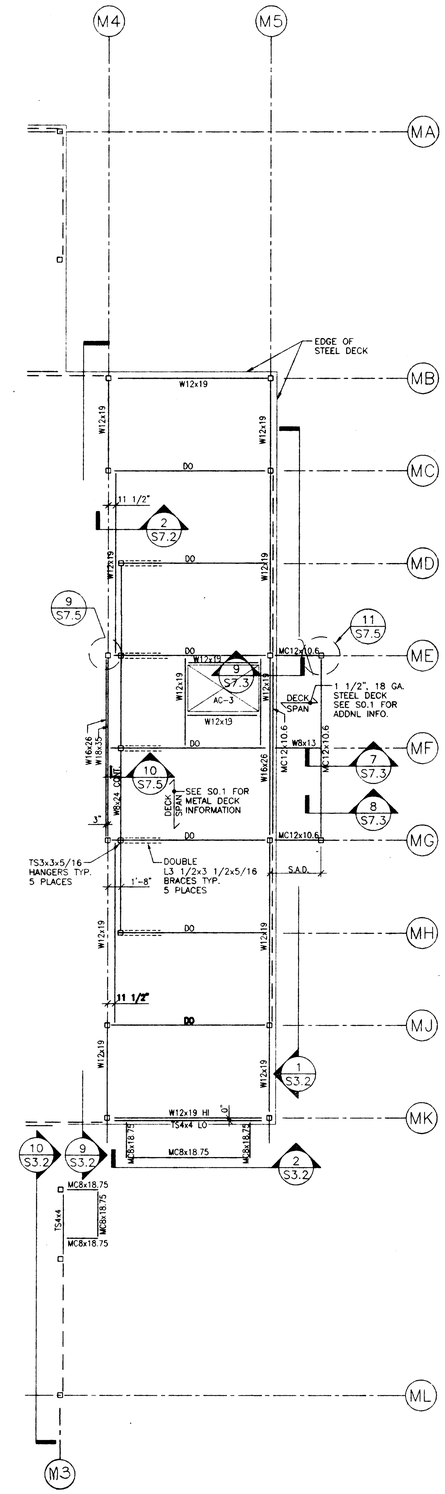

3 LOW ROOF FRAMING PLAN

1/8" = 1'-0"

1. SEE FRAME ELEVATIONS FOR TOP OF STEEL ELEVATIONS. TOP OF STEEL ELEVATIONS ARE FROM DATUM ELEVATION 0'-0" AS NOTED ON FOUNDATION PLAN.
2. ALL METAL DECKS ARE 3"x18Ga. PER S0.1 U.N.O. ON THIS PLAN
3. SEE FRAME ELEVATIONS FOR CHORD MEMBER LOCATIONS. MEMBERS DESIGNATED W/* ARE CHORD MEMBERS IN ADDITION TO THOSE CALLED OUT ON THE ELEVATION. USE A325 SC BOLTS FOR CONNECTIONS.
4. MECHANICAL UNITS SHOWN ABOVE ARE SCHEMATIC ONLY. SEE MECHANICAL PLANS FOR THEIR EXACT LOCATION AND DIMENSIONS. FOR ROOF PENETRATION DETAIL SEE 15/S7.2, 16/S7.2.

5 ROOF NOTES

HKA

Harlan Krusemark - Architect
4415 Cowell Road, Suite 230
Concord, CA 94521
Tel: 925.681.1905
Fax: 925.681.1906

MPT Consulting Engineers, Inc.
120 Howard Street, Suite 420
San Francisco, CA 94105
(415) 227-0900
Fax (415) 227-0910

Revisions Date

HAWKINS SCHOOL

475 Darlene Lane
Tracy, CA 95377

Jefferson School District
7500 West Linne Road
Tracy, CA 95304

DSA FILE NO. 39-39
IDENTIFICATION STAMP
DIVISION OF THE STATE ARCHITECT
APPL 02 -102225
AC. FILE
DATE

Sheet Title:
BUILDING M: MULTI-PURPOSE
ROOF FRAMING PLANS

Printing Date / Purpose:
08/18/00 DSA APPROVAL

Scale: AS SHOWN
Project Number: 9903.00
Sheet Number:

S2.5

of Sheets

FILE: 99648-23

COPYRIGHT © 2000 HARLAN KRUSEMARK - ARCHITECT (HKA) THESE DRAWINGS ARE PROPRIETARY DOCUMENTS OF HKA AND ARE NOT TO BE DISTRIBUTED, PUBLISHED OR REPRODUCED WITHOUT WRITTEN PERMISSION OF HKA.

K:\PROJECTS\Hawk1\HSCH\DRWGS\08.18.00\SK BKCK\99648-25a.dwg Sun Aug 20 15:36:45 2000

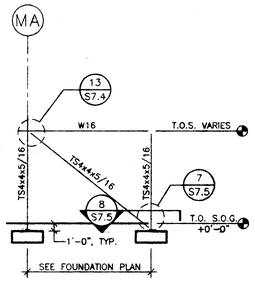

1 FRAME ELEVATION AT LINES M2 AND M3
1/8" = 1'-0"

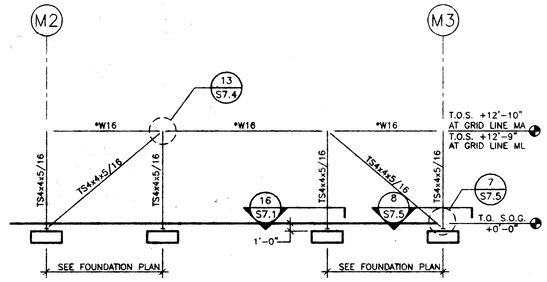

NOTES:
1. ALL MEMBERS DESIGNATED W/ * ARE CHORD MEMBERS. USE A325 SC BOLTS FOR CONNECTIONS.

2 FRAME ELEVATION AT LINES MA AND ML
1/8" = 1'-0"

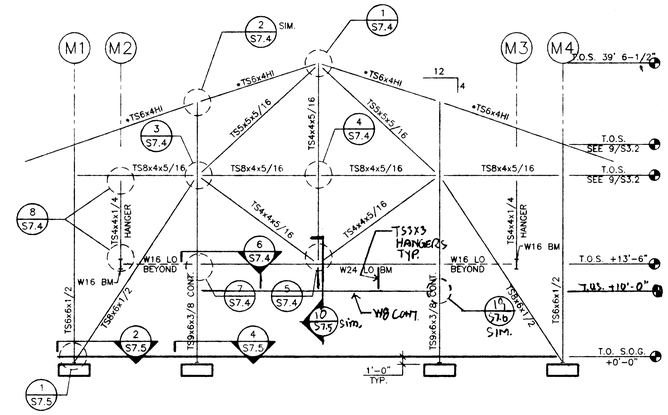

NOTES:
1. THE LONG DIMENSION OF ALL RECTANGULAR TS MEMBERS SHALL BE IN THE LONGITUDINAL PLANE OF THE FRAME.
2. ALL MEMBERS DESIGNATED W/ * ARE CHORD MEMBERS.

3 FRAME ELEVATION AT LINE MB
1/8" = 1'-0"

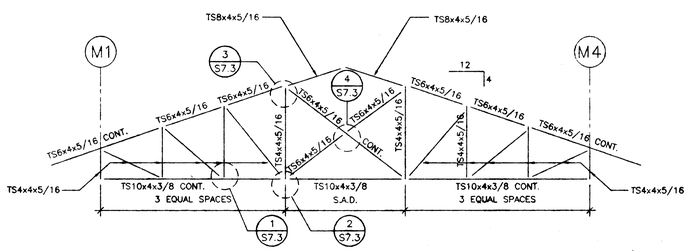

NOTE:
THE LONG DIMENSION OF ALL RECTANGULAR TS MEMBERS SHALL BE IN THE LONGITUDINAL PLANE OF THE FRAME.

13 TYPICAL ROOF TRUSS T1
1/8" = 1'-0"

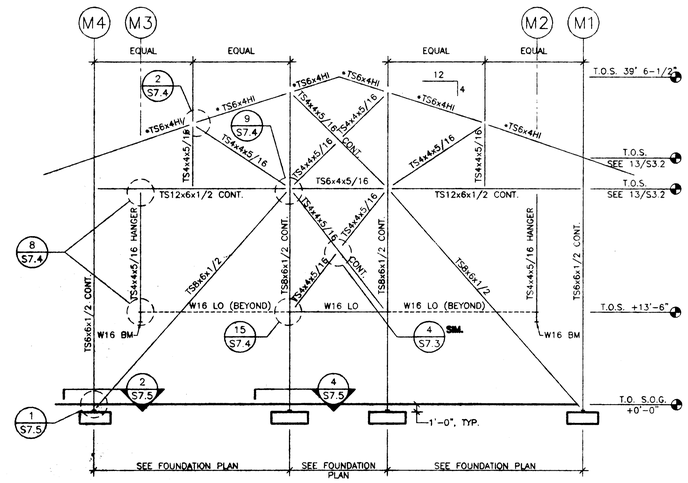

NOTES:
1. THE LONG DIMENSION OF ALL RECTANGULAR TS MEMBERS SHALL BE IN THE LONGITUDINAL PLANE OF THE FRAME.
2. ALL MEMBERS DESIGNATED W/ * ARE CHORD MEMBERS.

14 FRAME ELEVATION AT LINE MK
1/8" = 1'-0"

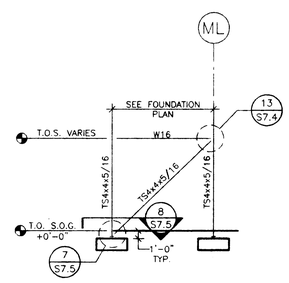

16 FRAME ELEVATION AT LINE M2
1/8" = 1'-0"

HKA
Harlan Krusemark - Architect
4415 Cowell Road, Suite 230
Concord, CA 94521
Tel: 925.681.1905
Fax: 925.681.1906

MFT Designs, Structural Engineers
130 Hawes Street, Suite 400
San Francisco, 94103
(415) 237-0550
Fax (415) 227-1483

SE 4346

Revisions	Date
△	
△	
△	
△	
△	

HAWKINS SCHOOL

475 Darlene Lane
Tracy, CA 95377

Jefferson School District
7500 West Linne Road
Tracy, CA 95304

DSA FILE NO. 39-30
IDENTIFICATION STAMP
DIVISION OF THE STATE ARCHITECT
APPL 02 -102225
AC ___ ss CCT
DATE AUG 2 4 2000

Sheet Title:
BUILDING M: MULTI-PURPOSE
FRAME ELEVATIONS

Printing Date / Purpose:
08/18/00 DSA APPROVAL

Scale: AS SHOWN
Project Number: 9903.00
Sheet Number:

S3.1

of Sheets

FILE: 99646-23

COPYRIGHT © 2000 HARLAN KRUSEMARK - ARCHITECT (HKA) THESE DRAWINGS ARE PROPRIETARY DOCUMENTS OF HKA AND ARE NOT TO BE DISTRIBUTED, PUBLISHED OR REPRODUCED WITHOUT WRITTEN PERMISSION OF HKA.

H:\PROJECTS\Hawkins\Sch\Dwgs\99-46-003A BKCP\99-46-31b.dwg Sun Aug 20 17:11:08 2000

40

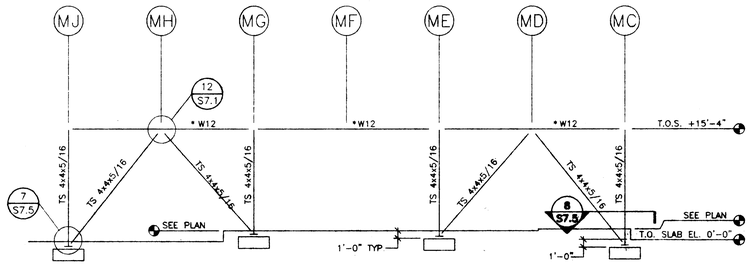

NOTE:

1. ALL MEMBERS DESIGNATED W/ * ARE CHORD MEMBERS. USE A325 SC BOLTS FOR CONNECTIONS.

1 FRAME ELEVATION AT LINE M5

1/8" = 1'-0"

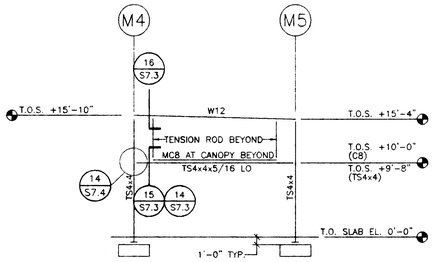

2 FRAME ELEVATION AT LINE MK AT CANOPY

1/8" = 1'-0"

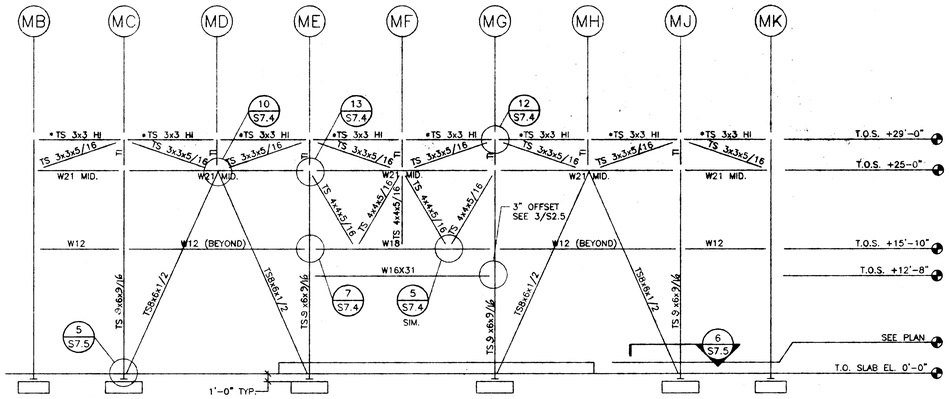

NOTES:

1. THE LONG DIMENSION OF ALL RECTANGULAR TS MEMBERS SHALL BE IN THE LONGITUDINAL PLANE OF THE FRAME.
2. ALL MEMBERS DESIGNATED W/ * ARE CHORD MEMBERS.

9 FRAME ELEVATION AT LINE M4

1/8" = 1'-0"

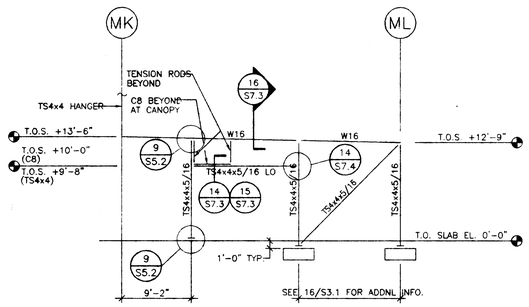

10 FRAME ELEVATION AT LINE M3

1/8" = 1'-0"

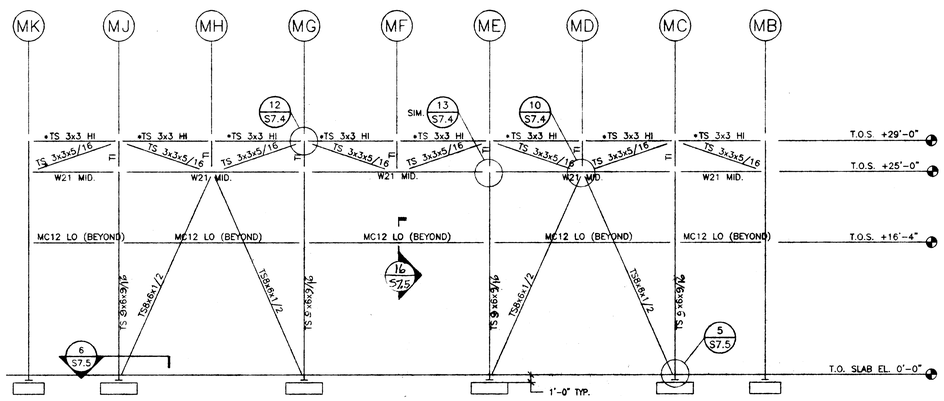

NOTES:

1. THE LONG DIMENSION OF ALL RECTANGULAR TS MEMBERS SHALL BE IN THE LONGITUDINAL PLANE OF THE FRAME.
2. MC12 LO BEAMS SHALL NOT BE ATTACHED TO THE TS DIAGONAL MEMBERS.
3. ALL MEMBERS DESIGNATED W/ * ARE CHORD MEMBERS.

13 FRAME ELEVATION AT LINE M1

1/8" = 1'-0"

HKA

Harlan Krusemark - Architect
4415 Cowell Road, Suite 230
Concord, CA 94521
Tel: 925.681.1905
Fax: 925.681.1906

REGISTERED ARCHITECT HARLAN KRUSEMARK No. STATE OF CALIFORNIA

MFT Consulting Engineers Inc.
130 Howard Street, Suite 400
San Francisco, CA 94105
(415) 227-0880
FAX (415) 227-0883

REGISTERED PROFESSIONAL ENGINEER DAVID FUNG No. S 3188 Exp. 6/30/02 STATE OF CALIFORNIA

REGISTERED PROFESSIONAL ENGINEER DAVID A. BRAND No. SE 4348 Exp. 9-30-03 STATE OF CALIFORNIA

Revisions	Date

HAWKINS SCHOOL

475 Darlene Lane
Tracy, CA 95377

Jefferson School District
7500 West Linne Road
Tracy, CA 95304

DSA FILE NO. 39-39
IDENTIFICATION STAMP
DIVISION OF THE STATE ARCHITECT
APPL 02 -102225
AC. TLS SS
DATE AUG 2 4 2000

Sheet Title:
BUILDING M: MULTI-PURPOSE
FRAME ELEVATIONS

Printing Date / Purpose:
08/18/00 DSA APPROVAL

Scale: AS SHOWN
Project Number: 9903.00
Sheet Number:

S3.2

of Sheets

FILE 99846-23

COPYRIGHT © 2000 HARLAN KRUSEMARK - ARCHITECT (HKA) THESE DRAWINGS ARE PROPRIETARY DOCUMENTS OF HKA AND ARE NOT TO BE DISTRIBUTED, PUBLISHED OR REPRODUCED WITHOUT WRITTEN PERMISSION OF HKA.

H:\PROJECTS\HawkinsSch\DRWGS\08-18-00\DSA_BKOX\99846-32a.dwg Sun Aug 20 17:36:59 2000

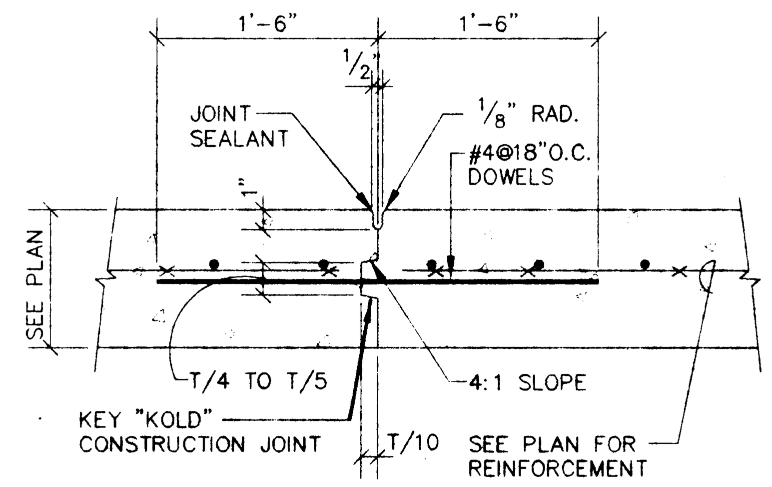

1 TYP. SLAB ON GRADE CONSTRUCTION JOINT

N.T.S.

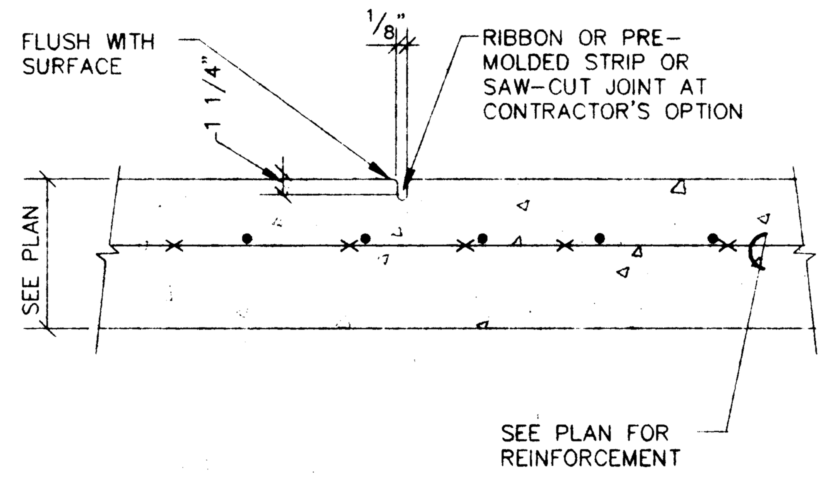

NOTE:

1. CONTROL JOINTS SHALL BE LOCATED AT 25'-0" MAX. CENTER TO CENTER AND SHALL BE LOCATED BETWEEN CONSTRUCTION JOINTS.

2 TYP. SLAB ON GRADE CONTROL JOINT

N.T.S.

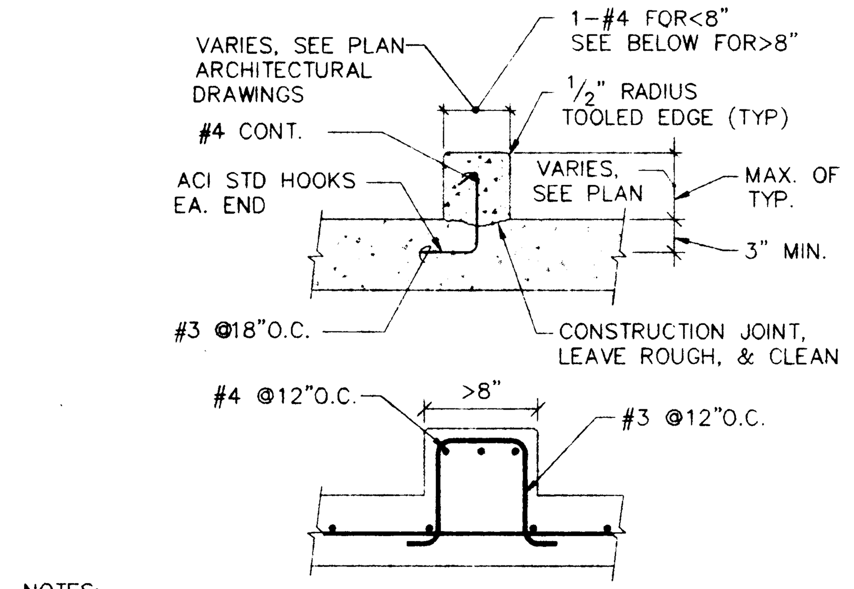

NOTES:

1. UNIFORM THICKNESS SLAB SHOWN.
2. AT CONTRACTOR'S OPTION, #3 DOWELS MAY BE EPOXY GROUTED INTO SLAB, DEPTH=2/3 OF SLAB THICKNESS

3 TYP. CONCRETE CURB

N.T.S.

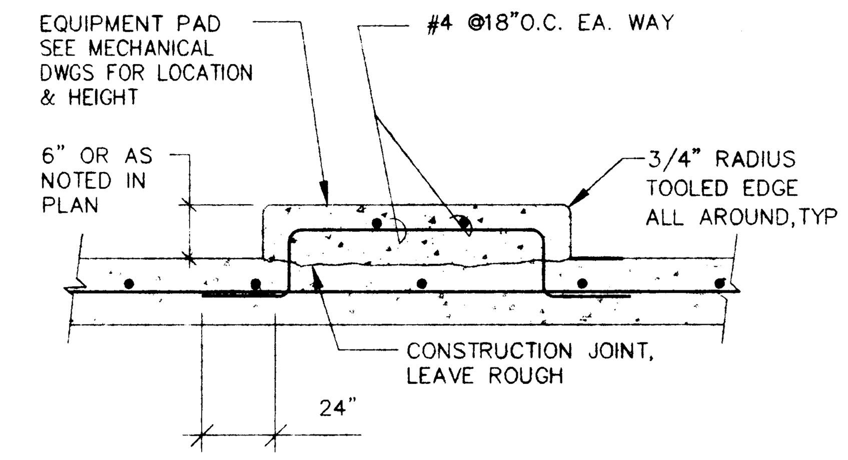

NOTES:

1. PAD SIZE SHALL BE MINIMUM AS NOTED ON THE PLANS OR AS INDICATED BY THE EQUIPMENT MFR. AND APPROVED BY THE ENGINEER.
2. EQUIPMENT BASES SHALL BE INSTALLED LEVEL UNLESS SPECIFIED OTHERWISE.
3. AT CONTRACTOR'S OPTION, #4 DOWELS MAY BE EPOXY GROUTED INTO THE SLAB (DEPTH=2/3 OF SLAB THICKNESS)

4 TYP. EQUIPMENT PAD

N.T.S.

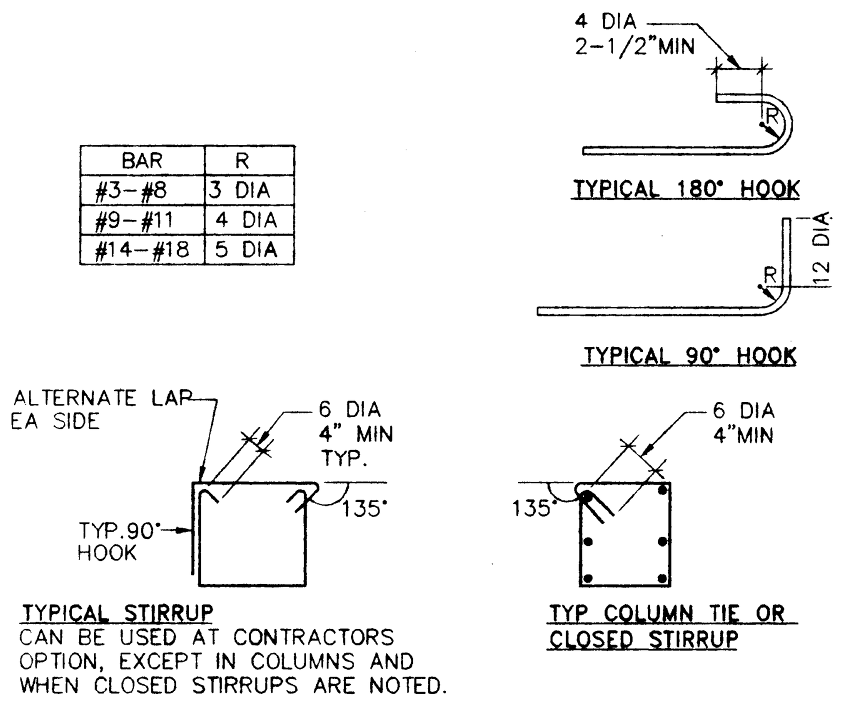

5 TYP. REINF. BAR HOOKS, BENDS, STIRRUPS AND TIES

N.T.S.

TYP. REINF. BAR LAP SPLICES

LAP SPLICE LENGTH l (INCHES) FOR GRADE 60 REBAR AND f'c<4000 psi NORM. WT CONCRETE BASED ON SECTION 12.2.2, ACI 318-95.

BAR SIZE	LAP CLASS	LAP LENGTH PER SPACING AND COVER CASE			
		CASE 1		CASE 2	
		TOP BARS	OTHER BARS	TOP BARS	OTHER BARS
#3	A	22	17	32	25
	B	28	22	42	32
#4	A	29	22	43	33
	B	37	29	56	43
#5	A	36	28	54	41
	B	47	36	70	54
#6	A	43	33	64	50
	B	56	43	84	64
#7	A	63	48	94	72
	B	81	63	122	94
#8	A	72	55	107	82
	B	93	72	139	107
#9	A	81	62	121	93
	B	105	81	157	121
#10	A	91	70	136	105
	B	118	91	177	136
#11	A	101	78	151	116
	B	131	101	196	151

NOTES:

1. AT WALLS, COLUMNS, BEAMS, AND SLABS, USE CLASS "B" SPLICES TYPICALLY FOR ALL BARS.
2. TOP BARS ARE HORIZONTAL BARS WITH 12" OR MORE OF CONCRETE CAST BELOW THEM.
3. SEE 1998 C.B.C. FOR OTHER CONDITIONS.
4. CASE 1
   BEAMS AND COLUMNS:
   CONCRETE COVER > d_b
   c.-c. BAR SPACING > $2d_b$ AND WITH STIRRUPS OR TIES THROUGHOUT l_d NOT LESS THAN THE CODE MINIMUM.
   OTHER ELEMENTS:
   CONCRETE COVER > d_b AND
   c.-c. BAR SPACING > $3d_b$
5. CASE 2
   BEAMS AND COLUMNS:
   CONCRETE COVER ≤ d_b AND
   c.-c. BAR SPACING ≤ $2d_b$ AND WITH STIRRUPS OR TIES THROUGHOUT l_d NOT LESS THAN THE CODE MINIMUM.
   OTHER ELEMENTS:
   CONCRETE COVER ≤ d_b AND
   c.-c. BAR SPACING ≤ $3d_b$

6 TYP. REINF. BAR LAP SPLICES

N.T.S.

PROVIDE SLEEVES FOR ALL PIPES PASSING THRU GRADE BEAMS, CONT FOOTINGS OR WALLS. PASS THRU MIDDLE THIRD OF DEPTH OF GRADE BEAM OR FOOTING. CLEARANCE BETWEEN ADJACENT SLEEVES SHALL BE NO LESS THAN DIA. OF LARGER SLEEVE OR 6"MIN DO NOT PASS PIPES THRU ISOLATED SPREAD FTGS PASS AROUND AS REQ'D.

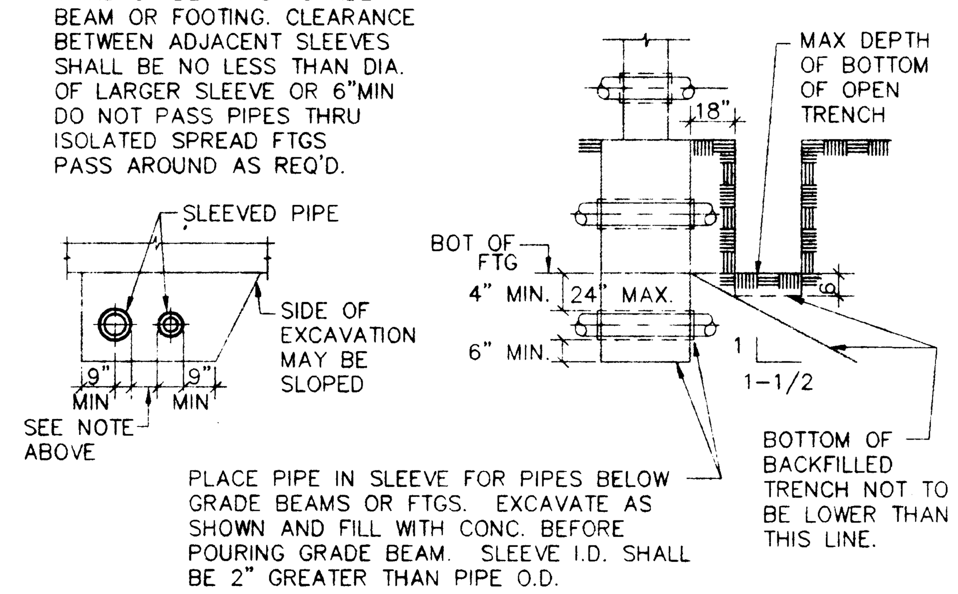

7 TYP. PIPE PENETRATIONS AND TRENCHES @ GRADE BM, FTG, WALL

N.T.S.

TYP. REINF. BAR EMBEDMENT		
CONC. STRENGTH:	f'c = 3000 OR 4000 PSI	
BAR SIZE:	OTHER BARS	TOP BAR
#3	25"	32"
#4	33"	43"
#5	41"	54"
#6	50"	64"
#7	72"	94"
#8	82"	107"
#9	93"	121"
#10	105"	136"
#11	116"	151"
#14	139"	181"
#18	186"	241"

NOTES:

1. AT WALLS, COLUMNS, BEAMS, AND SLABS, USE EMBEDMENT SHOWN ABOVE FOR ALL BARS IN NORMAL WEIGHT CONCRETE WITH CLEAR SPACING BETWEEN BARS GREATER THAN OR EQUAL TO 4 BAR DIAMETERS.
2. TOP BARS ARE HORIZONTAL BARS WITH 12" OR MORE OF CONCRETE CAST BELOW THEM.
3. SEE 1998 C.B.C. FOR OTHER CONDITIONS.

8 TYP. REINF. BAR EMBEDMENT

N.T.S.

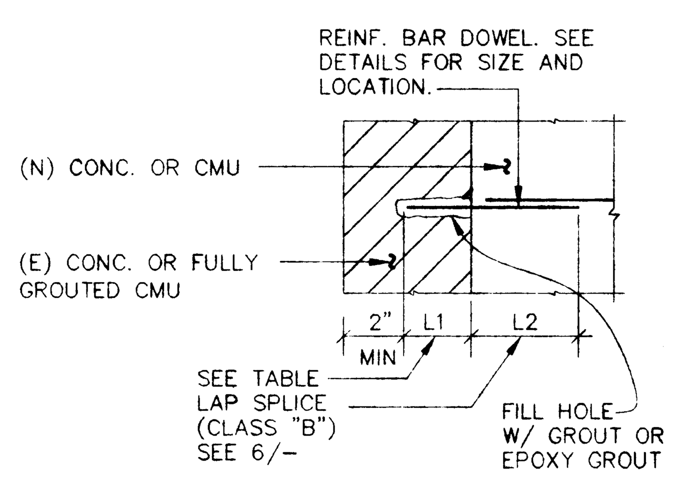

BAR SIZE	NON-SHRINK GROUT		EPOXY GROUT	
	HOLE DIA	L1*	HOLE DIA	L1*
#3	1-1/2"	6"	1/2"	4"
#4	1-1/2"	8"	5/8"	5"
#5	1-3/4"	10"	3/4"	6"
#6	1-3/4"	12"	1"	8"
#7	2"	14"	1 1/4"	9"
#8	2"	16"	1 3/8"	10"
#9	2-1/2"	18"	1-1/2"	12"
#10	2-1/2"	24"	–	–
#11	2-1/2"	30"	–	–

DRILLED DOWEL NOTES

1. SEE SPECIFICATIONS & DRAWING S-0.1 FOR INSTALLATION AND MATERIAL REQUIREMENTS.
2. DO NOT CUT EXISTING REINF. WHEN DRILLING.
3. PROOF LOAD DOWELS IN TENSION AS REQUIRED BY SPECIFICATIONS & DRAWING S-0.1.
4. NON-SHRINK GROUT SHALL BE NON-METALLIC & FLOWABLE. EPOXY GROUTS SHALL BE APPLIED PER MANUFACTURER'S RECOMMENDATION AT HORIZONTAL, VERTICAL AND OVERHEAD APPLICATIONS.
5. * INDICATES EMBEDMENT SHALL BE INCREASED BY 2" AT CMU.

9 TYPICAL DRILLED DOWELS

N.T.S.

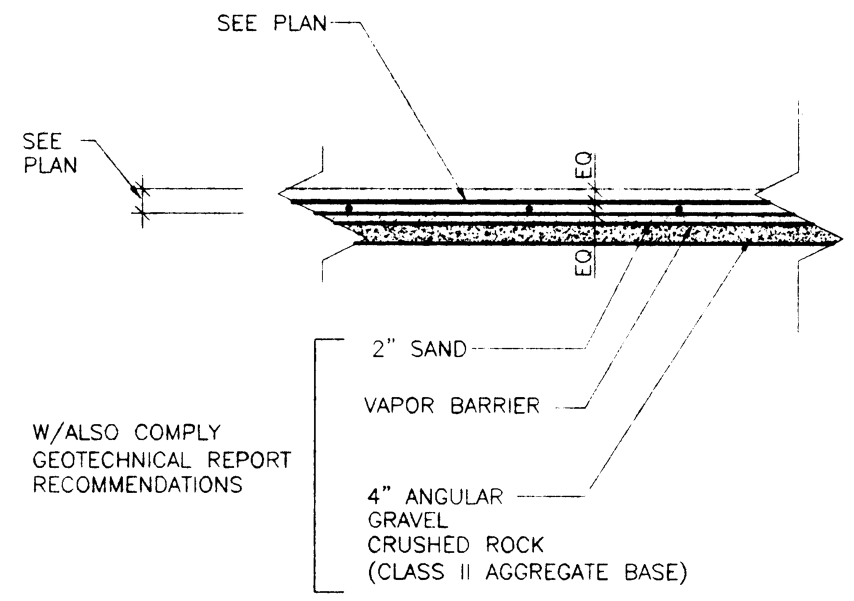

11 TYP. SLAB ON GRADE SECTION

N.T.S.

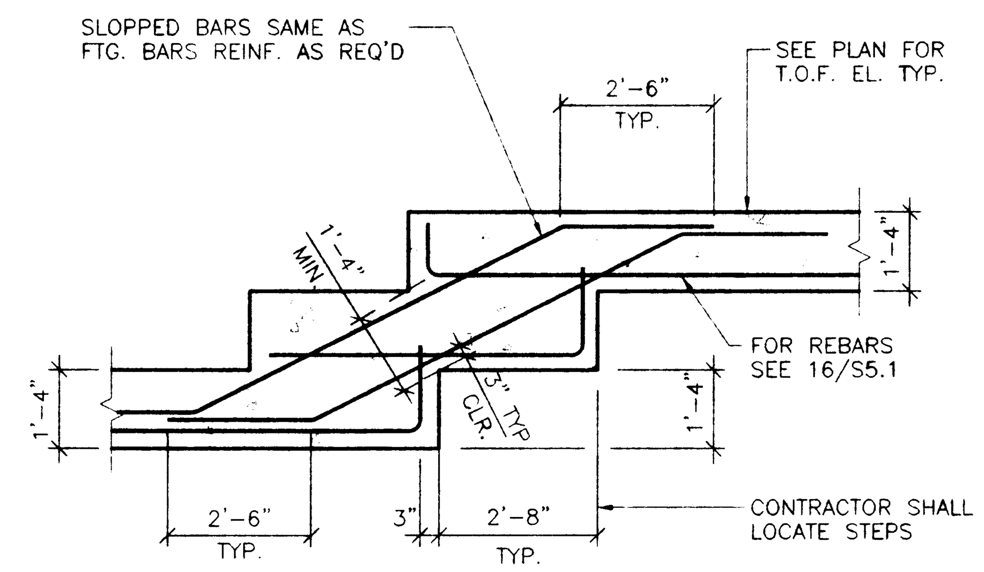

12 TYPICAL STEPPED FOOTING

N.T.S.

FOOTING SCHEDULE				
I.D.	SIZE (WXLXD)	BOT. REBAR	TOP. REBAR	REMARKS
F1	4'-0"x4'-0"x2'-6"	8-#6 E.W.	–	
F2	4'-0"x4'-0"x2'-6"	8-#6 E.W.	8-#6 E.W.	
F3	2'-0"x2'-0"x1'-6"	4-#5 E.W.	–	
F4	5'-0"x5'-0"x2'-6"	10-#6 E.W.	10-#6 E.W.	
F5	5'-6"x5'-6"x2'-6"	11-#6 E.W.	11-#6 E.W.	
F6	4'-9"x4'-9"x2'-6"	10-#6 E.W.	10-#6 E.W.	
F7	4'-0"x4'-0"x2'-6"	8-#6 E.W.	8-#6 E.W.	

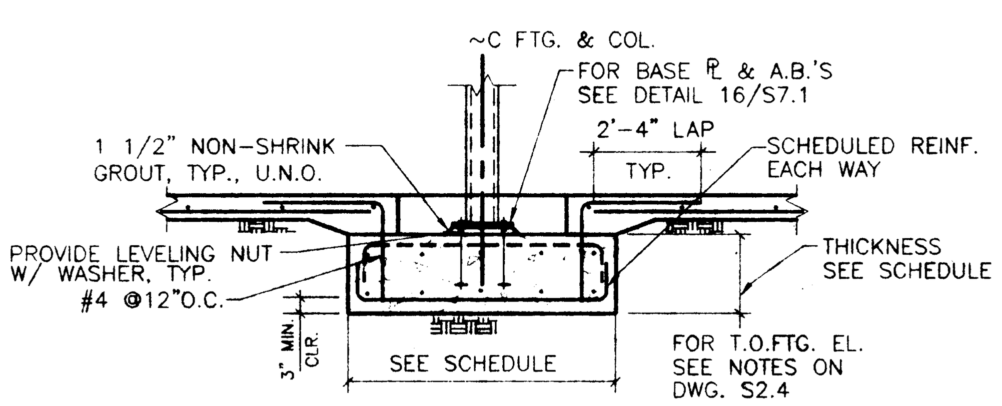

13 TYP. ISOLATED FOOTING

N.T.S.

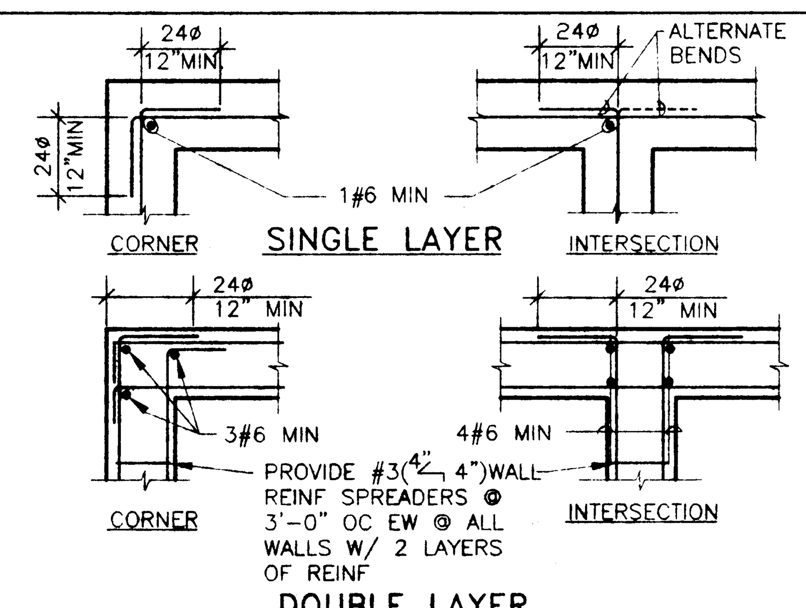

NOTE:

1. SEE OTHER DETAILS & NOTES FOR SIZE & SPACING OF REINF
2. LAP & HOOK FTG BARS AT CORNERS & INTERSECTIONS SAME AS FOR WALLS, EXCEPT THAT ADDED VERTICALS AT CORNERS ARE NOT REQUIRED.

14 TYP. CORNER REINFORCEMENT

N.T.S.

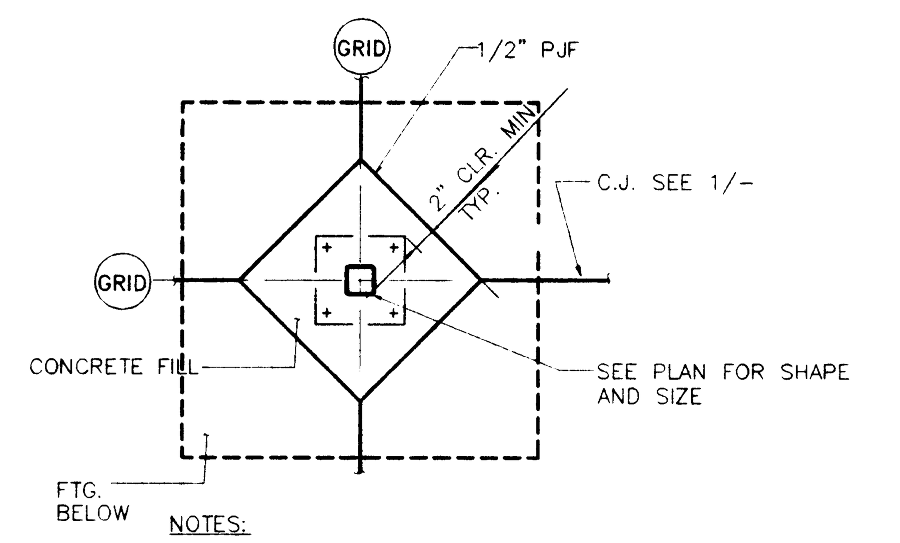

NOTES:

1. HOLD PJF 1/2" BELOW TOC @ JOINTS REQUIRING SEALANT.

15 TYP. ISOLATION JOINT @ COLUMN

N.T.S.

HKA
Harlan Krusemark - Architect
4415 Cowell Road, Suite 230
Concord, CA 94521
Tel: 925.681.1905
Fax: 925.681.1906

Revisions | Date

HAWKINS SCHOOL

475 Darlene Lane
Tracy, CA 95377

Jefferson School District
7500 West Linne Road
Tracy, CA 95304

DSA FILE NO. 39-39
IDENTIFICATION STAMP
DIVISION OF THE STATE ARCHITECT
APPL 02-102225

Sheet Title:
TYPICAL CONCRETE DETAILS

Printing Date / Purpose:
08/18/00 DSA APPROVAL

Scale: AS SHOWN
Project Number: 9803.00
Sheet Number:

S5.1

of Sheets

FILE: 99646-51

COPYRIGHT © 2000 HARLAN KRUSEMARK - ARCHITECT (HKA) THESE DRAWINGS ARE PROPRIETARY DOCUMENTS OF HKA AND ARE NOT TO BE DISTRIBUTED, PUBLISHED OR REPRODUCED WITHOUT WRITTEN PERMISSION OF HKA.

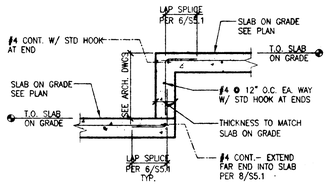

1 TYPICAL STEPPED SLAB ON GRADE
3/4" = 1'-0"

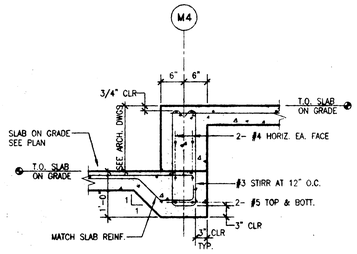

NOTE:
GRADE BEAM TOP REINFORCEMENT MAY BE SPLICED MIDWAY BETWEEN COLUMN LOCATIONS.
BOTTOM REINFORCEMENT MAY BE SPLICED AT COLUMN LOCATIONS.
REFER TO 6/S5.1 FOR SPLICE LENGTHS.

2 STEPPED SLAB AT GRADE BEAM
3/4" = 1'-0"

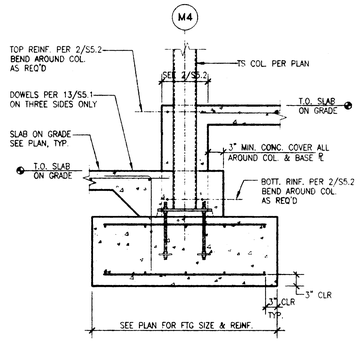

3 ISOLATED FOOTING AT STEPPED SLAB
3/4" = 1'-0"

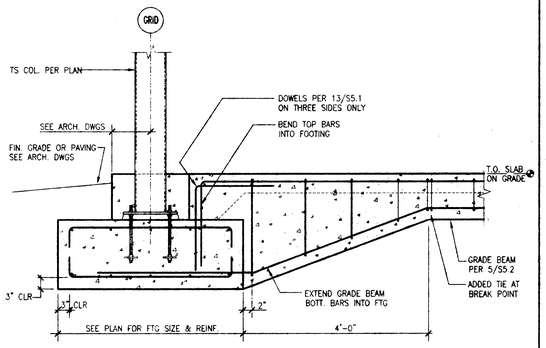

4 ISOLATED FOOTING AT GRADE BEAM
3/4" = 1'-0"

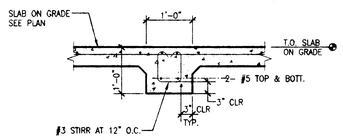

NOTES:
1. GRADE BEAM TOP AND BOTTOM BARS MAY BE SPLICED AT THE MIDDLE 1/3 OF THE GRADE BEAM SPAN.
2. SLAB ON GRADE REINFORCEMENT PLACEMENT PARALLEL TO THE GRADE BEAM IS NOT TO BE INTERRUPTED AT GRADE BEAM LOCATIONS.

5 GRADE BEAM SECTION
3/4" = 1'-0"

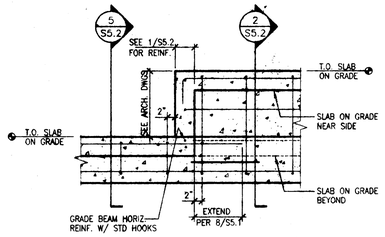

6 GRADE BEAM TRANSITION AT SLAB ON GRADE
3/4" = 1'-0"

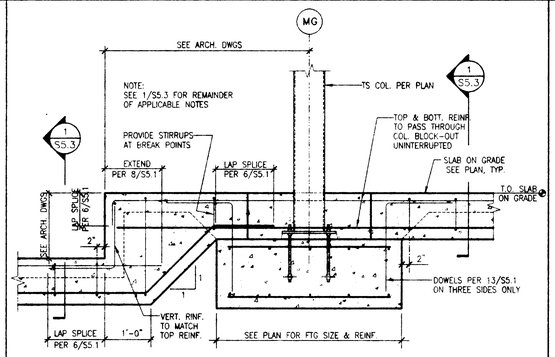

7 STEPPED S.O.G. EDGE AT COLUMN
3/4" = 1'-0"

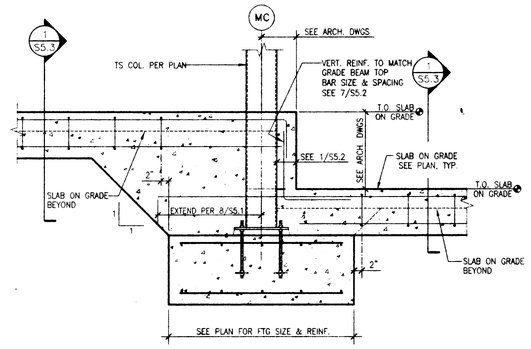

8 STEPPED SLAB ON GRADE AT COLUMN
3/4" = 1'-0"

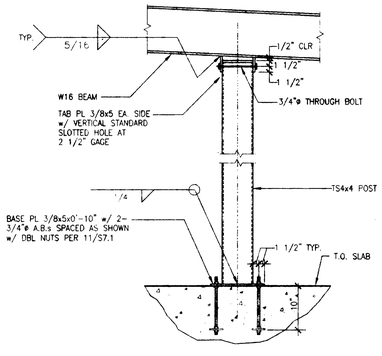

9 NON-BEARING POST BASE ON SLAB
3/4" = 1'-0"

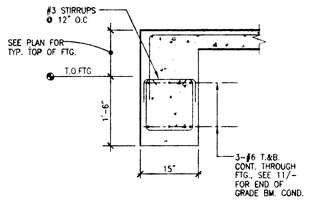

10 PERIMETER GRADE BM.
3/4" = 1'-0"

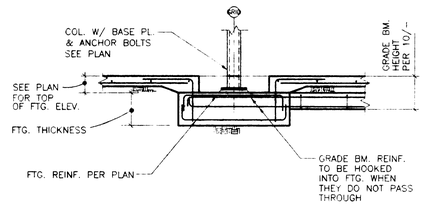

11 GRADE BM. TO FTG.
3/4" = 1'-0"

HKA
Harlan Krusemark - Architect
4415 Cowell Road, Suite 230
Concord, CA 94521
Tel: 925.681.1905
Fax: 925.681.1906

REGISTERED ARCHITECT HARLAN KRUSEMARK No. C23892 Exp. 9/30/01 STATE OF CALIFORNIA

MFT Structural Engineers
170 Howard Street, Suite 470
San Francisco, CA 94105
(415) 227-4083
Exp. 12/31/00

E S 3185 EXPIRES 3/31/01

REGISTERED PROFESSIONAL ENGINEER DAVID T. SHOWALTER No. SE 4346 Exp. 12/31/00 STATE OF CALIFORNIA

Revisions	Date

HAWKINS SCHOOL

475 Darlene Lane
Tracy, CA 95377

Jefferson School District
7500 West Linne Road
Tracy, CA 95304

DSA FILE NO. 39-39
IDENTIFICATION STAMP
DIVISION OF THE STATE ARCHITECT
APPL 02 -102225
AC ELS SSC
DATE AUG 2 4 2000

Sheet Title:
CONCRETE DETAILS & SECTIONS

Printing Date / Purpose:
08/18/00 DSA APPROVAL

Scale: AS SHOWN
Project Number: 9903.00
Sheet Number:

S5.2

of Sheets

FILE: 99646-51

COPYRIGHT © 2000 HARLAN KRUSEMARK - ARCHITECT (HKA) THESE DRAWINGS ARE PROPRIETARY DOCUMENTS OF HKA AND ARE NOT TO BE DISTRIBUTED, PUBLISHED OR REPRODUCED WITHOUT WRITTEN PERMISSION OF HKA.

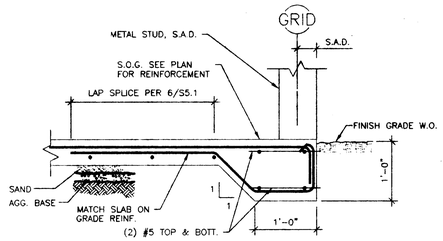

NOTE:
THE 2-#5 TOP & BOT. REINF. ARE TO BE CONTINUOUS THROUGH THE PERIMETER ISOLATED FTG. THESE REINF. MAY BE SPLICED AT THE MIDDLE 1/3 OF THE DISTANCE BETWEEN COLUMNS W/ISOLATED FTG'S.

1 TYPICAL S.O.G. EDGE DETAIL W/ WALL
1"=1'-0"

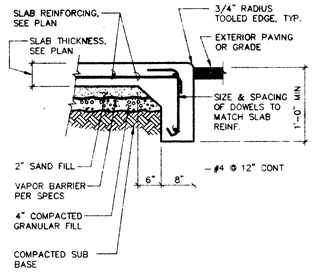

2 TYP. THICKENED SLAB EDGE @ WALKWAY
1"=1'-0"

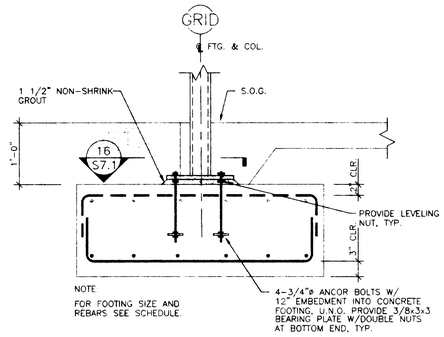

3 TYPICAL ISOLATED FOOTING
1"=1'-0"

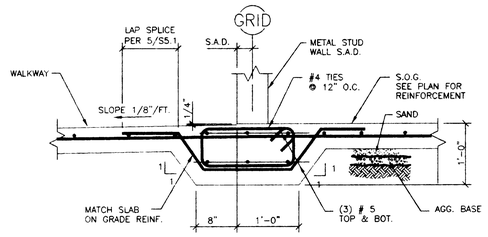

4 TYPICAL S.O.G. SECTION BTWN. FLOOR SLAB AND WALKWAY
1"=1'-0"

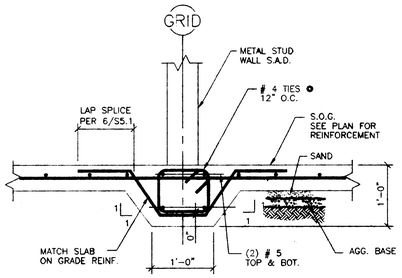

5 TYPICAL S.O.G. SECTION UNDER BRACE FRAME
1"=1'-0"

HKA
Harlan Krusemark - Architect
4415 Cowell Road, Suite 230
Concord, CA 94521
Tel: 925.681.1905
Fax: 925.681.1906

REGISTERED ARCHITECT HARLAN KRUSEMARK C-15884 EXP. 6-30-01 STATE OF CALIFORNIA

MFT Consulting Engineers
120 Howard Street, Suite 420
San Francisco, CA 94105
(415) 397-0880
Fax (415) 227-0463

REGISTERED PROFESSIONAL ENGINEER WILLIAM FORD TREAT E-5 3185 EXP. 6/30/02 STATE OF CALIFORNIA

REGISTERED PROFESSIONAL ENGINEER GE 43481 STATE OF CALIFORNIA

Revisions Date

HAWKINS SCHOOL

475 Darlene Lane
Tracy, CA 95377

Jefferson School District
7500 West Linne Road
Tracy, CA 95304

DSA FILE NO. 39-39
IDENTIFICATION STAMP
DIVISION OF THE STATE ARCHITECT
APPL 02 -102225
AC FLR SS
DATE 8/18/00

Sheet Title:
CONCRETE DETAILS AND SECTIONS

Printing Date / Purpose:
08/18/00 DSA APPROVAL

Scale: AS SHOWN
Project Number: 9903.00
Sheet Number:

S5.3

of Sheets

FILE: 99646-51

COPYRIGHT © 2000 HARLAN KRUSEMARK - ARCHITECT (HKA) THESE DRAWINGS ARE PROPRIETARY DOCUMENTS OF HKA AND ARE NOT TO BE DISTRIBUTED, PUBLISHED OR REPRODUCED WITHOUT WRITTEN PERMISSION OF HKA.

H:\PROJECTS\Hawkins\Sch\DWGS\99-19-00DSA BKCK\9965-05-53s.dwg Sun Aug 20 17:37:48 2000

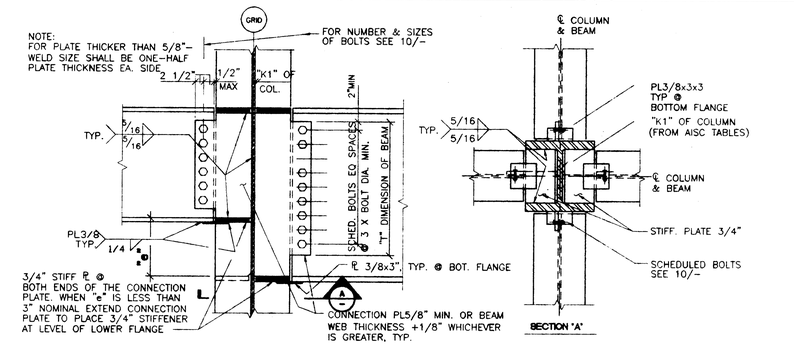

1 TYP. GIRDER TO COLUMN WEB
N.T.S.

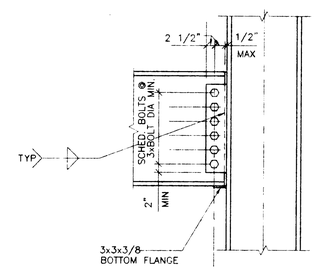

3 TYP. GIRDER TO COLUMN FLANGE
N.T.S.

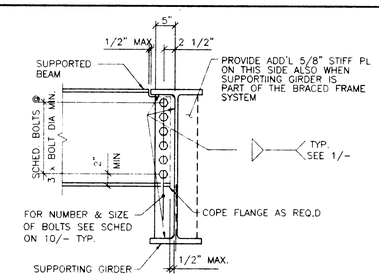

4 TYP. BEAM TO GIRDER ONE SIDE
N.T.S.

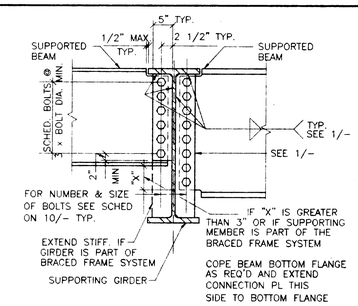

5 TYP. BEAM TO GIRDER TWO SIDES
N.T.S.

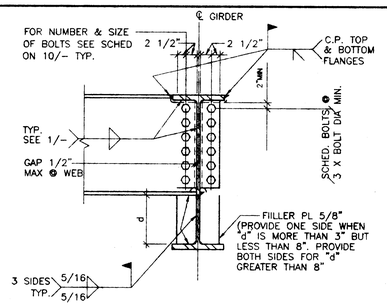

6 TYP. BEAM TO GIRDER MOMENT CONNECTION
N.T.S.

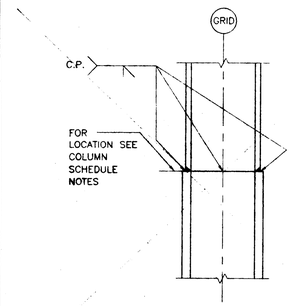

7 COLUMN SPLICE
N.T.S.

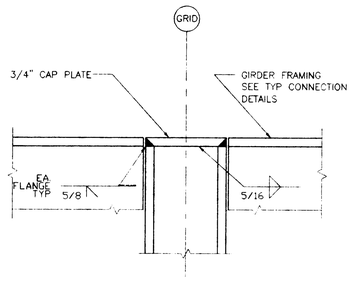

8 TYP. COLUMN CAP
N.T.S.

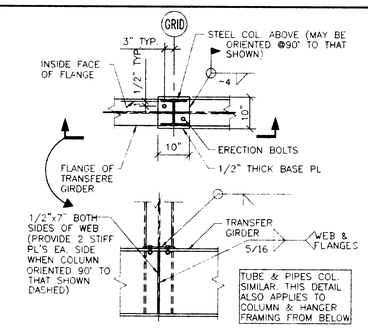

9 COL. BASE PLATE ON TOP OF TRANSFER GIRDER
N.T.S.

DEPTH OF GIRDER	NUMBER OF 7/8" ø BOLT A325M
W36	10
W33	9
W30	8
W27	8
W24	7
W21	6
W18	5
W16	4
W14	3
W12	3
W10,	3
W8, W6	2 USE 3/4"ø BOLT

FOR CHANNEL SECTIONS USE SAME NUMBER & SIZE OF BOLTS AS FOR SAME DEPTH "W" SECTION.

10 BOLT SCHEDULE FOR NON-MOMENT CONNECTIONS
N.T.S.

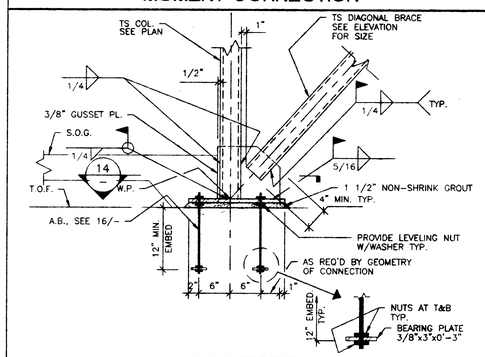

11 TYP. BRACE CONNECTION
1"=1'-0"

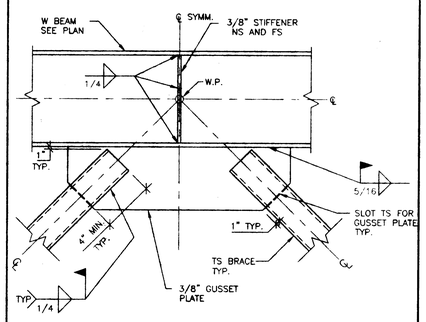

12 TYP. CHEVRON BRACE CONN.
1"=1'-0"

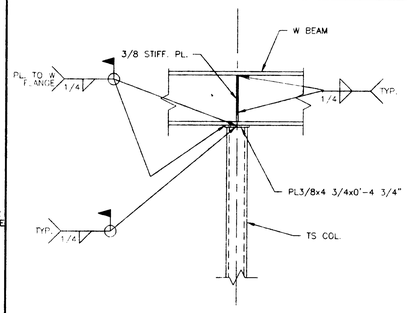

13 TS COL. TO BM. CONNECTION
1"=1'-0"

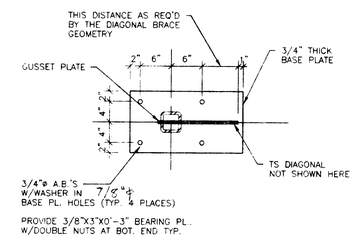

14 TYP. BASE PL. FOR BRACED FRAMES
1"=1'-0"

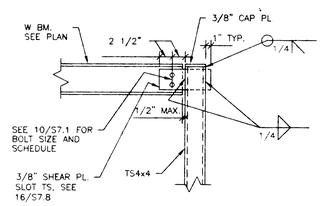

15 DETAIL
1"=1'-0"

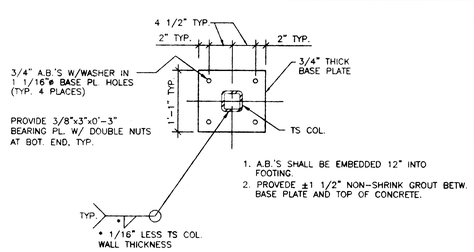

16 TYP. COLUMN BASE PLATE
1"=1'-0"

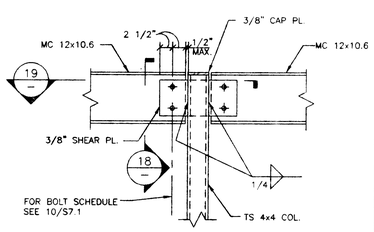

17 DETAIL
1"=1'-0"

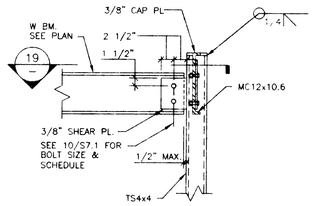

18 DETAIL
1"=1'-0"

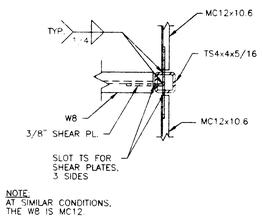

19 DETAIL
1"=1'-0"

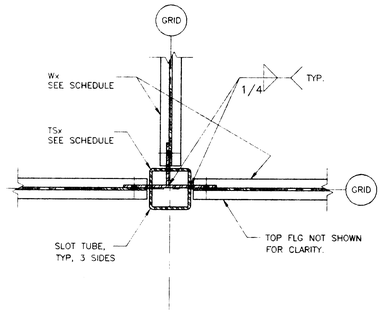

20 TYP. TUBE CONNECTION
1"=1'-0"

HKA
Harlan Krusemark - Architect
4415 Cowell Road, Suite 230
Concord, CA 94521
Tel: 925.681.1905
Fax: 925.681.1906

Revisions | Date

HAWKINS SCHOOL

475 Darlene Lane
Tracy, CA 95377

Jefferson School District
7500 West Linne Road
Tracy, CA 95304

DSA FILE NO. 39-39
IDENTIFICATION STAMP
DIVISION OF THE STATE ARCHITECT
APPL 02 -102225
AC
DATE AUG 2 4 2000

Sheet Title:
TYPICAL STEEL DETAILS

Printing Date / Purpose:
08/18/00 DSA APPROVAL

Scale: AS SHOWN
Project Number: 9903.00
Sheet Number:

S7.1

of Sheets

FILE: 99646-71

COPYRIGHT © 2000 HARLAN KRUSEMARK - ARCHITECT (HKA) THESE DRAWINGS ARE PROPRIETARY DOCUMENTS OF HKA AND ARE NOT TO BE DISTRIBUTED, PUBLISHED OR REPRODUCED WITHOUT WRITTEN PERMISSION OF HKA.

H:\PROJECTS\Hawkins\SCH\DWGS\08-18-00\SA BKCK\99646-71a dwg Sun Aug 20 17:38:14 2000

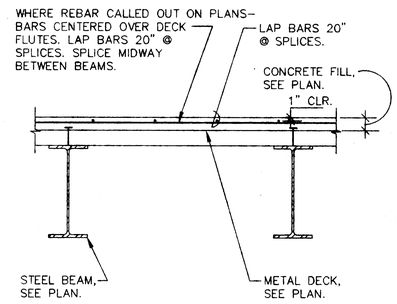

NOTE:
STAGGER SPLICES IN ADJACENT BARS

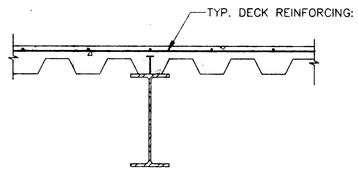

TYPICAL SECTION

1 TYP REINF FOR CONC FILL OVER METAL DECK

SCALE: 1" = 1'-0"

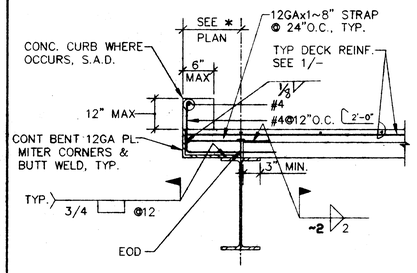

DECK PERPENDICULAR TO EDGE

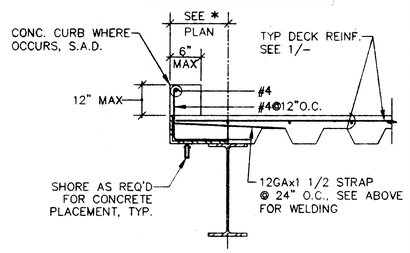

DECK PARALLEL TO EDGE

2 TYP EDGE OF DECK DETAILS

SCALE: 1" = 1'-0"

* USE WHERE DECK OVERHANG IS 1'-6" OR LESS.

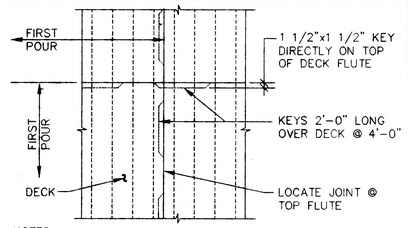

NOTES:
1. SLAB REINF CONT THRU JOINT UNO
2. SEE PLAN FOR LOCATION OF CJ

6 CONSTRUCTION JOINT IN CONCRETE FILL OVER DECK

SCALE: 1" = 1'-0"

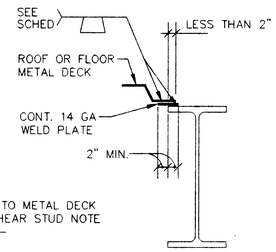

NOTE:
REFER TO METAL DECK AND SHEAR STUD NOTE ON –/–

4 TYP WELDS PARALLEL TO DECK WHERE SIDE BEARING IS LESS THAN 2"

SCALE: 1" = 1'-0"

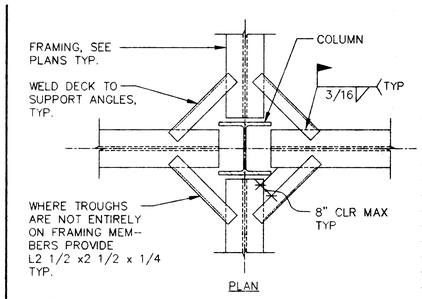

5 DECK SUPPORT AT COLUMN

SCALE: 1" = 1'-0"

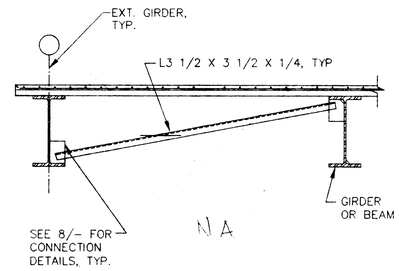

7 TYP BRACE

NTS

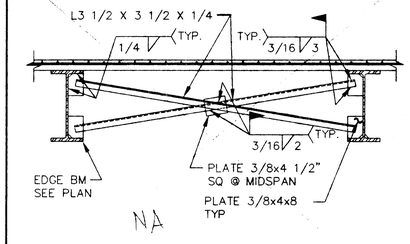

8 TYP BM BRACE DETAIL @ ROOFS

NTS

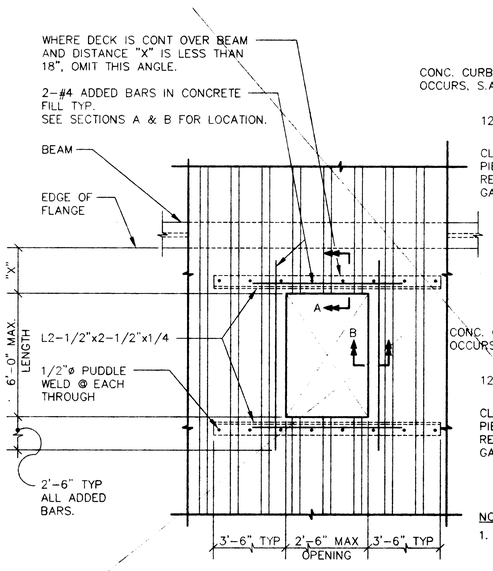

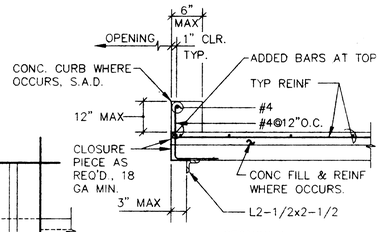

SECTION A

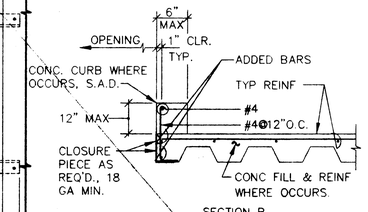

SECTION B

NOTES:
1. BLOCK OPENING AND CUT DECK AFTER CONC HAS REACHED DESIGN STRENGTH. IF OPENING IS CUT PRIOR TO THE FILL PLACEMENT, CONTRACTOR TO PROVIDE CLOSURE PIECES AND SHORING AS REQUIRED.
2. HOLES LESS THAN 6" IN DIAMETER AND CUTTING NO MORE THAN 1 WEB NEED NO REINFORCEMENT.
3. HOLES FOR MULTIPLE OPENINGS WITH A CLEAR DISTANCE LESS THAN 3x THE SIZE OF THE LARGER OPENING SHALL BE CONSIDERED AS A SINGLE OPENING.

NA

9 SMALL OPENING IN METAL DECK

SCALE: 1" = 1'-0"

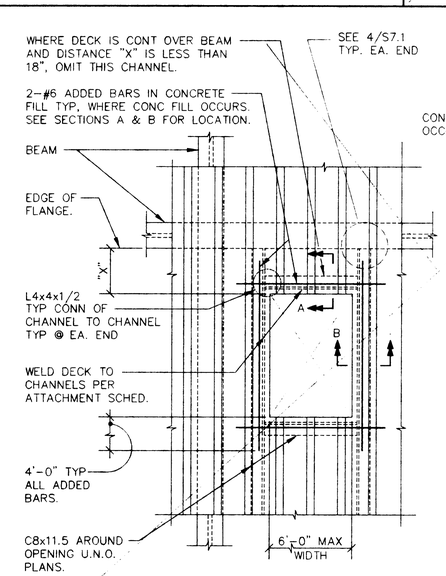

NOTE:
SEE PLANS FOR REINFORCING AT LARGER OPENINGS.
SEE 10/S7.1 FOR TYP. CONNECTION REQM'S.

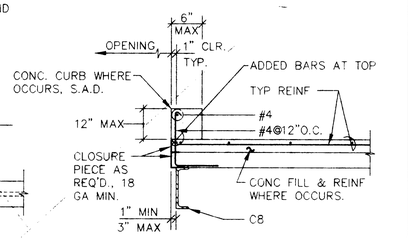

SECTION A

NA

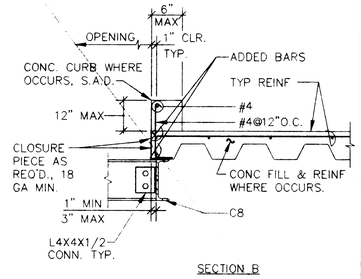

SECTION B

10 LARGE OPENING IN METAL DECK

SCALE: 1" = 1'-0"

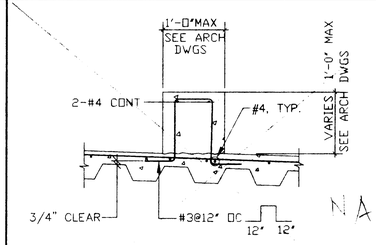

NA

11 CONCRETE CURB AT DECK

SCALE: 1" = 1'-0"

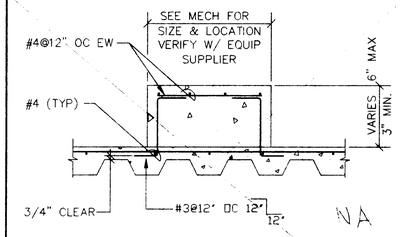

NA

NOTE:
PLACE PAD AFTER SLAB HAS REACHED STRENGTH DESIGN

12 HOUSEKEEPING PAD AT DECK

SCALE: 1" = 1'-0"

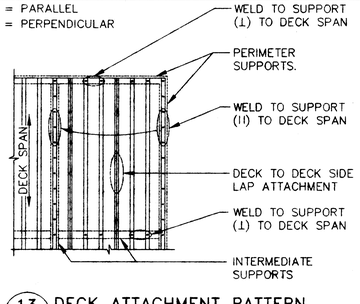

13 DECK ATTACHMENT PATTERN

NTS

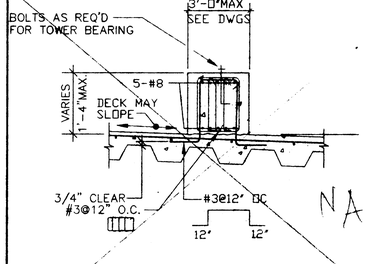

NA

14 CONCRETE CURB AT COOLING TOWER

NTS

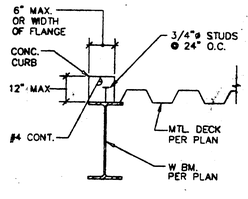

15 EDGE OF DECK OPN'G. W/DECK PARALLEL

1"=1'-0"

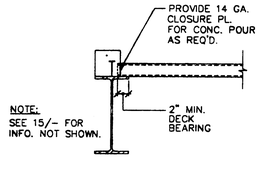

NOTE:
SEE 15/– FOR INFO. NOT SHOWN.

16 EDGE OF DECK OPN'G. W/DECK PERPENDICULAR

1"=1'-0"

COPYRIGHT © 2000 HARLAN KRUSEMARK - ARCHITECT (HKA) THESE DRAWINGS ARE PROPRIETARY DOCUMENTS OF HKA AND ARE NOT TO BE DISTRIBUTED, PUBLISHED OR REPRODUCED WITHOUT WRITTEN PERMISSION OF HKA.

HKA
Harlan Krusemark - Architect
4415 Cowell Road, Suite 230
Concord, CA 94521
Tel: 925.681.1905
Fax: 925.681.1906

Revisions | Date

HAWKINS SCHOOL
475 Darlene Lane
Tracy, CA 95377

Jefferson School District
7500 West Linne Road
Tracy, CA 95304

DSA FILE NO. 39-38
IDENTIFICATION STAMP
DIVISION OF THE STATE ARCHITECT
APPL 02 -102225
AC
DATE AUG 2 4 2000

Sheet Title:
TYPICAL METAL DECK DETAILS

Printing Date / Purpose:
08/18/00 DSA APPROVAL

Scale: AS SHOWN
Project Number: 9903.00
Sheet Number:

S7.2

of Sheets

FILE: 99646-72

H:\PROJECTS\Hawkins\SCH\DRWGS\DB-18-0005A.DKCK.99646-72a.dwg Sun Aug 20 17:38:40 2000

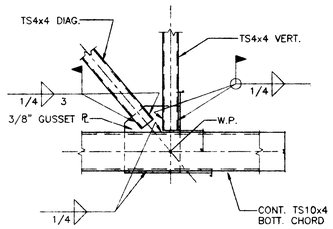

1 ROOF TRUSS CONT. BOTT. CHORD
3/4" = 1'-0"

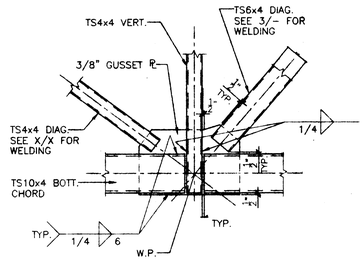

2 ROOF TRUSS BOTT. CHORD SPLICE
3/4" = 1'-0"

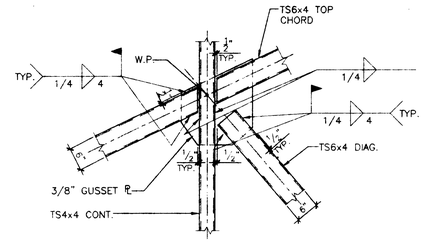

3 ROOF TRUSS TOP CHORD CONN.
3/4" = 1'-0"

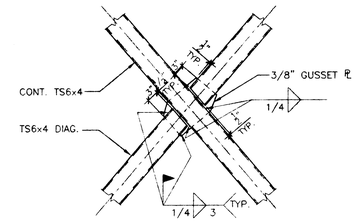

NOTE: AT SIMILAR CONDITION, DIAGONAL MEMBERS ARE TS4x4

4 TYPICAL CROSS BRACE CONNECTION
3/4" = 1'-0"

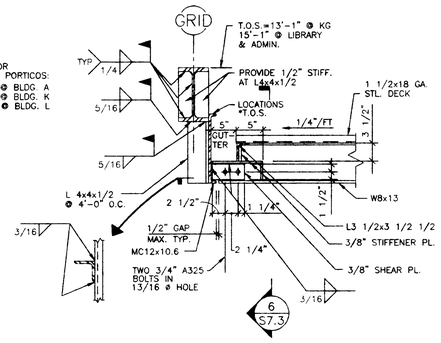

5 PORTICO ROOF SUPPORT DETAIL
1"= 1'-0"

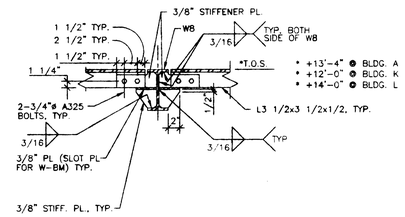

6 DETAIL
1" = 1'-0"

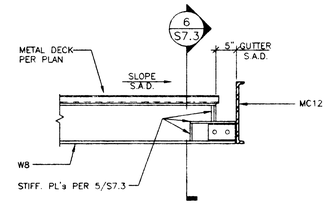

NOTE:
SEE 5/S7.3 FOR REMAINDER OF APPLICABLE NOTES.

7 W8 TO MC12 AT GUTTER
3/4" = 1'-0"

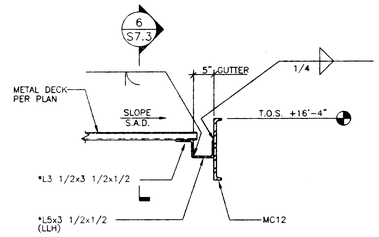

*NOTE:
THESE ANGLES ARE DISCONTINUOUS AT THE W8 LOCATIONS. SEE 6/S7.3.

8 PORTICO ROOF DECK SUPPORT
3/4" = 1'-0"

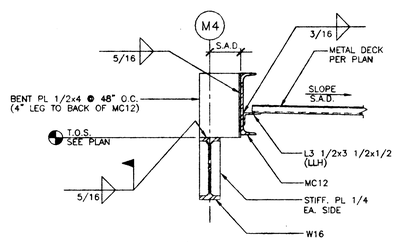

NOTE:
SEE SHEET S0.1 FOR METAL DECK ATTACHMENT TO FRAMING MEMBER.

9 PORTICO ROOF DECK SUPPORT
3/4" = 1'-0"

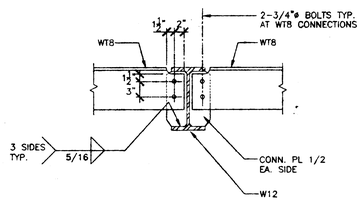

10 WT BEAM TO W12 CONN.
3/4" = 1'-0"

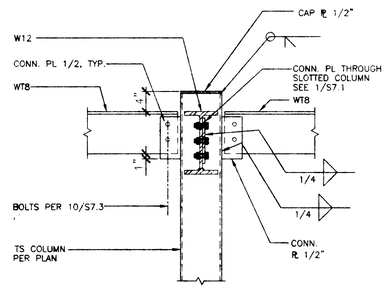

11 WT BEAM TO TS COLUMN
3/4" = 1'-0"

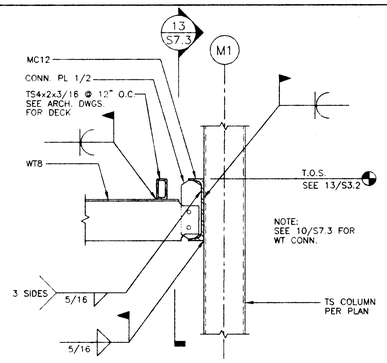

12 TRELLIS CONN. TO BUILDING
3/4" = 1'-0"

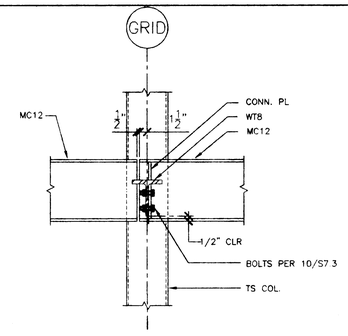

13 WT TO MC12 CONNECTION AT TS COLUMN LOCATIONS
3/4" = 1'-0"

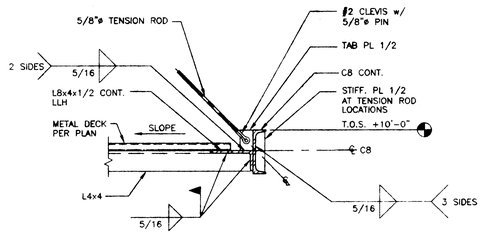

NOTE:
THE C8 BEYOND SPANNING PARALLEL TO THE DECK FLUTES IS NOT SHOWN FOR CLARITY IT IS TO BE ATTACHED TO TO THE L4x4 WITH A 5/8" FILLET WELD TOP AND BOTTOM.

14 CANOPY SUPPORT
3/4" = 1'-0"

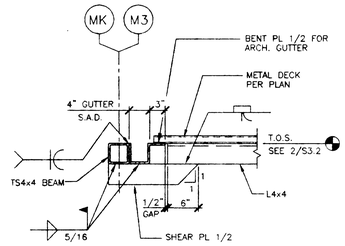

NOTES:
1. THE C8 BEYOND SPANNING PARALLEL TO THE DECK FLUTES IS NOT SHOWN FOR CLARITY. IT IS TO TERMINATE WHERE THE L4x4 ENDS.
2. AT SIMILAR CONDITION THE TS4x4 COLUMN IS PRESENT IN PLACE OF TS4x4 BEAM.

15 CANOPY SUPPORT AT BUILDING
3/4" = 1'-0"

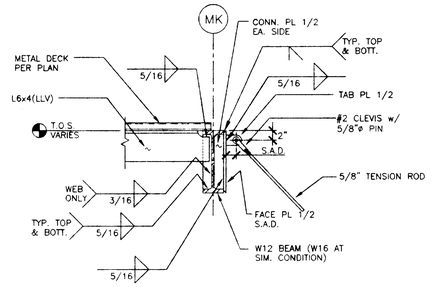

16 TENSION ROD TO W BEAM
3/4" = 1'-0"

HKA
Harlan Krusemark - Architect
4415 Cowell Road, Suite 230
Concord, CA 94521
Tel: 925.681.1905
Fax: 925.681.1906

Revisions | Date

HAWKINS SCHOOL

475 Darlene Lane
Tracy, CA 95377

Jefferson School District
7500 West Linne Road
Tracy, CA 95304

DSA FILE NO. 39-39
IDENTIFICATION STAMP
DIVISION OF THE STATE ARCHITECT
APPL 02 -102225
AC. FEB 98
DATE 3/11/ 2 2 2000

Sheet Title:
STEEL DETAILS AND SECTIONS

Printing Date / Purpose:
08/18/00 DSA APPROVAL

Scale: AS SHOWN
Project Number: 9903.00
Sheet Number:

S7.3

of Sheets

FILE: 99646-51

COPYRIGHT © 2000 HARLAN KRUSEMARK - ARCHITECT (HKA) THESE DRAWINGS ARE PROPRIETARY DOCUMENTS OF HKA AND ARE NOT TO BE DISTRIBUTED, PUBLISHED OR REPRODUCED WITHOUT WRITTEN PERMISSION OF HKA.

H:\PROJECTS\Hawkins\Dwgs\08-18-00DSA BKCK\S9646-73a.dwg Sun Aug 20 17:39:09 2000

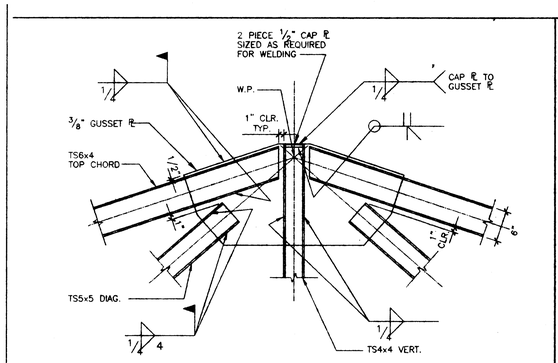

1 ROOF TOP CHORD CONNECTION AT HIGH POINT 1"=1'

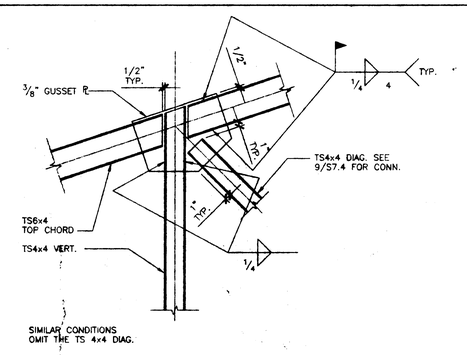

2 ROOF TOP CHORD CONNECTION 1"=1'

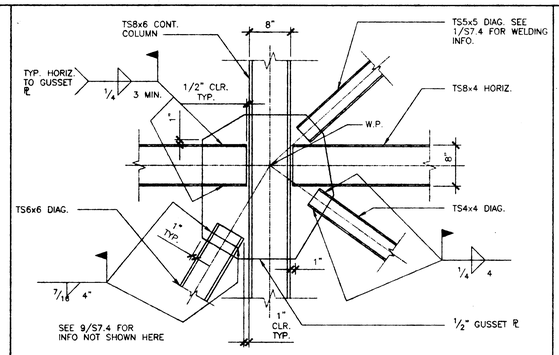

3 DIAGONAL CONNECTION AT CONTINUOUS COLUMN 1"=1'

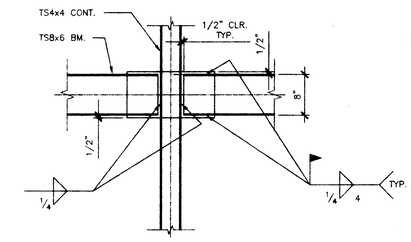

4 TS POST CONNECTION 1"=1'

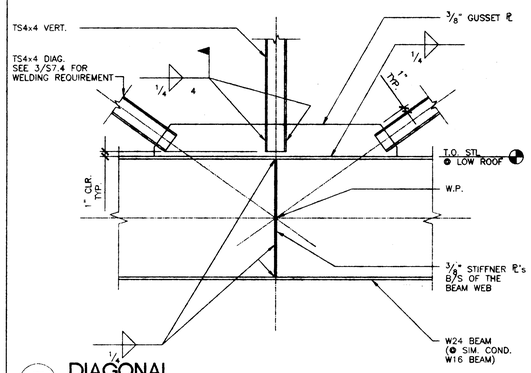

5 DIAGONAL CONNECTION TO LOW BEAM 1"=1'

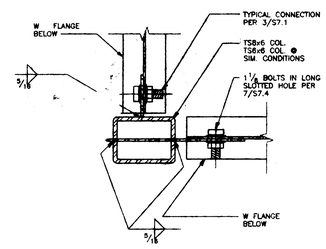

6 LOW ROOF CONN. TO TS COL. 1 1/2"=1'

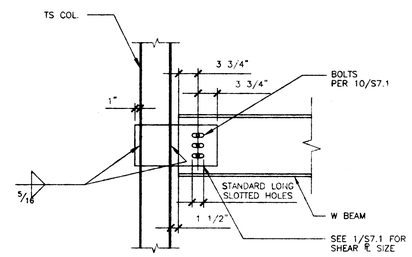

7 TYPICAL SLIP CONNECTION 1"=1'

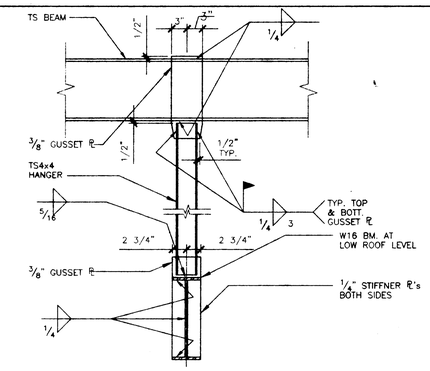

8 HANGER CONNECTION 1"=1'

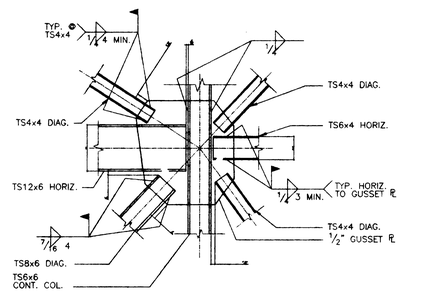

9 DIAGONAL CONNECTION AT CONT. COLUMN 3/4"=1'

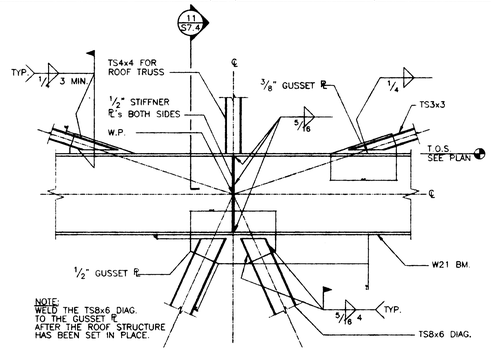

10 CHEVRON BRACE CONN. w/ ROOF TRUSS 3/4"=1'

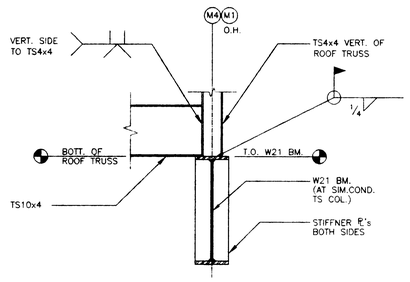

11 ROOF TRUSS TO W21 CONN. 1"=1'

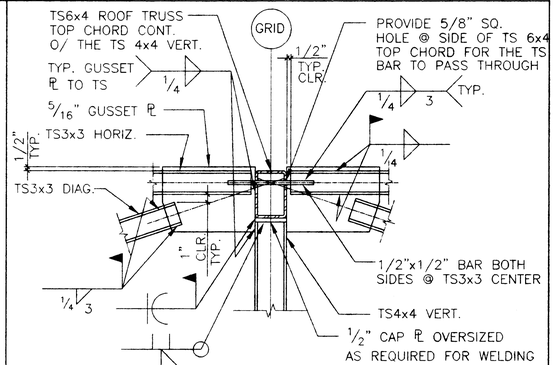

12 PERIMETER TOP CHORD CONN. 1"=1'

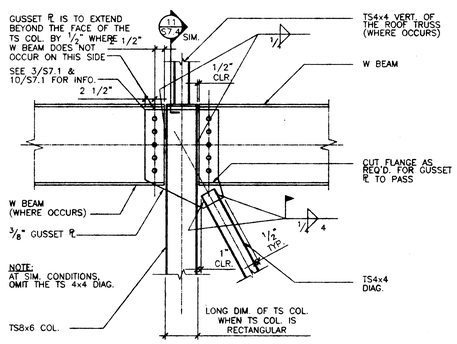

13 ROOF TRUSS TO TS COL. 3/4"=1'

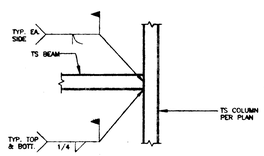

14 TYP. TS BM. TO TS COL. 1"=1'

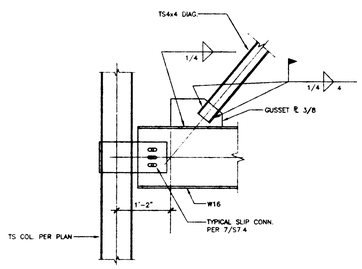

15 DIAG. BRACE AT SLIP CONN.

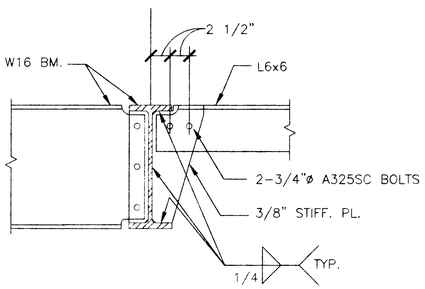

16 L6x6 TO W BM.

HKA
Harlan Krusemark - Architect
4415 Cowell Road, Suite 230
Concord, CA 94521
Tel: 925.681.1905
Fax: 925.681.1906

REGISTERED PROFESSIONAL ENGINEER — STRUCTURAL — SE4346 — STATE OF CALIFORNIA

MFT Consulting Engineers, Inc.
120 Howard Street, Suite 420
San Francisco, CA 94105
(415) 267-0880
Fax (415) 227-0883

REGISTERED PROFESSIONAL ENGINEER — CIVIL — C 33185 — EXP 9/30/02 — STATE OF CALIFORNIA

Revisions	Date

HAWKINS SCHOOL

475 Darlene Lane
Tracy, CA 95377

Jefferson School District
7500 West Linne Road
Tracy, CA 95304

DSA FILE NO. 39-32
IDENTIFICATION STAMP: DIVISION OF THE STATE ARCHITECT
APPL 02 -102225
AC
DATE AUG 2 4 2000

Sheet Title:
STEEL DETAILS AND SECTIONS

Printing Date / Purpose:
08/18/00 DSA APPROVAL

Scale: AS SHOWN
Project Number: 9906.00
Sheet Number:

S7.4

of Sheets

FILE 99646-51

COPYRIGHT © 2000 HARLAN KRUSEMARK - ARCHITECT (HKA) THESE DRAWINGS ARE PROPRIETARY DOCUMENTS OF HKA AND ARE NOT TO BE DISTRIBUTED, PUBLISHED OR REPRODUCED WITHOUT WRITTEN PERMISSION OF HKA.

H:\PROJECTS\Hawkins\DWGS\08-18-00\S4-99646-74a.DWG Sun Aug 20 17:39:36 2000

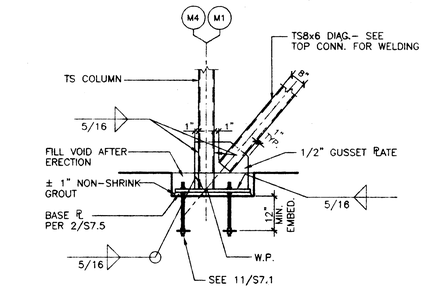

1 BRACE CONN. AT FRAMES MK AND MB
3/4" = 1'-0"

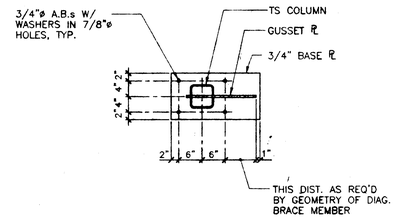

2 BASE PL CONN. AT LINES MK AND MB
3/4" = 1'-0"

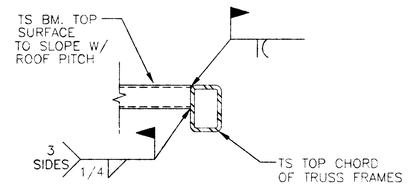

3 TS TO TS CONN. AT ROOF
1" = 1'-0"

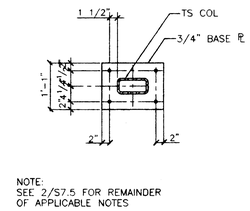

4 COLUMN BASE PL FOR RECTANGULAR TS
3/4" = 1'-0"

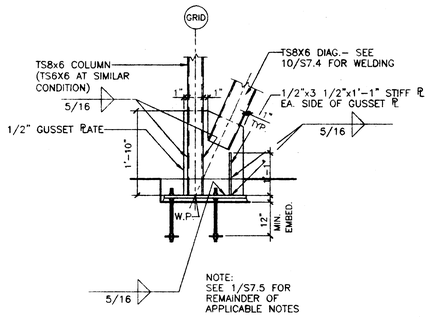

5 BRACE FRAME CONN. AT LINE M4 LINE M1 SIM.
3/4" = 1'-0"

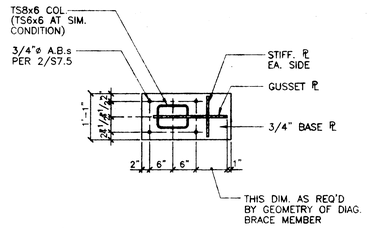

6 BASE PL CONN. AT LINE M4 LINE M1 SIM.
3/4" = 1'-0"

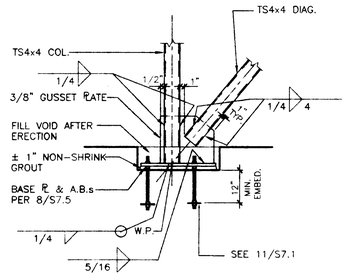

7 TYPICAL BRACE CONNECTION
3/4" = 1'-0"

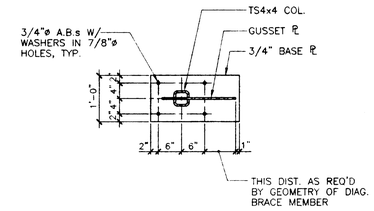

8 TYP. BASE CONN. FOR BRACE FRAMES
3/4" = 1'-0"

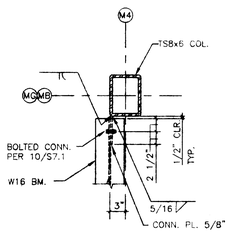

9 OFFSET CONNECTION
1" = 1'-0"

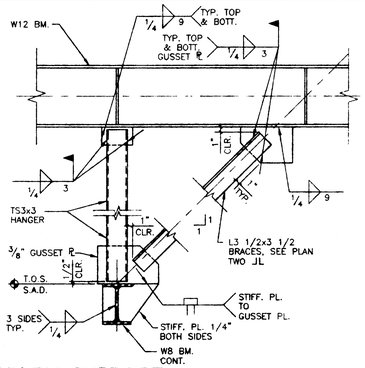

10 CURTAIN BM. SUPPORT
1" = 1'-0"

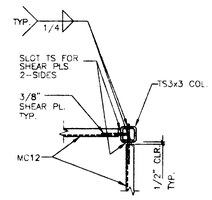

11 MC12 TO TS3x3
1" = 1'-0"

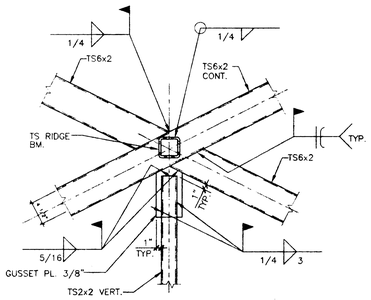

12 "T1" TRUSS APEX CONN. (LIBRARY)
1" = 1'-0"

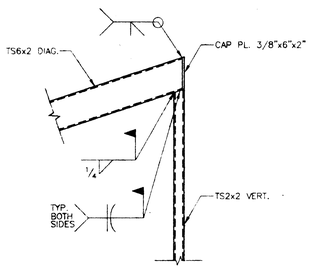

13 TOP OF SKYLIGHT (LIBRARY)
1" = 1'-0"

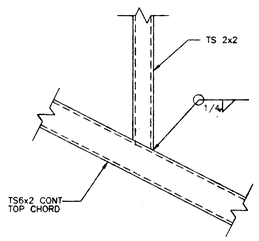

14 SKYLIGHT TO TRUSS TOP CHORD (LIBRARY)
1" = 1'-0"

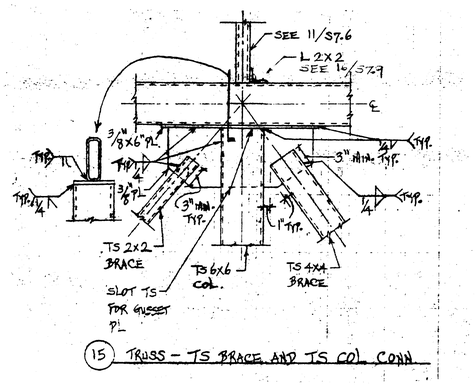

15 TRUSS – TS BRACE AND TS COL CONN

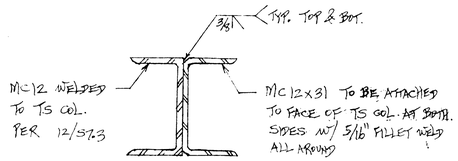

16 REINFORCED MC12

HKA

Harlan Krusemark - Architect
4415 Cowell Road, Suite 230
Concord, CA 94521
Tel: 925.681.1905
Fax: 925.681.1906

REGISTERED ARCHITECT HARLAN KRUSEMARK No. 6888 Exp. 9/99 STATE OF CALIFORNIA

MFT Consulting Engineers Inc.
120 Howard Street, Suite 420
San Francisco, CA 94105
(415) 227-0900
Fax (415) 227-0903

REGISTERED PROFESSIONAL ENGINEER SEAL STRUCTURAL NIAZ TAHMASSEBI S 3180 EXP. 6/30/02 STATE OF CALIFORNIA

REGISTERED PROFESSIONAL ENGINEER SE 4346 Exp. 12/31/00 STATE OF CALIFORNIA

Revisions	Date

HAWKINS SCHOOL

475 Darlene Lane
Tracy, CA 95377

Jefferson School District
7500 West Linne Road
Tracy, CA 95304

DSA FILE NO. 39-39
IDENTIFICATION STAMP
DIVISION OF THE STATE ARCHITECT
APPL 02 -102225
AC ___ FDN ___ SS ___
DATE AUG 24 2000

Sheet Title:
STEEL DETAILS AND SECTIONS

Printing Date / Purpose:
08/18/00 DSA APPROVAL

Scale: AS SHOWN
Project Number: 9903.00
Sheet Number:

S7.5

of Sheets

FILE: 99646-51

COPYRIGHT © 2000 HARLAN KRUSEMARK - ARCHITECT (HKA) THESE DRAWINGS ARE PROPRIETARY DOCUMENTS OF HKA AND ARE NOT TO BE DISTRIBUTED, PUBLISHED OR REPRODUCED WITHOUT WRITTEN PERMISSION OF HKA.

H:\PROJECTS\Hawkins\DRWGS\08-18-00\S4 BRDX\99646-75a.dwg Sun Aug 20 17:41:43 2000

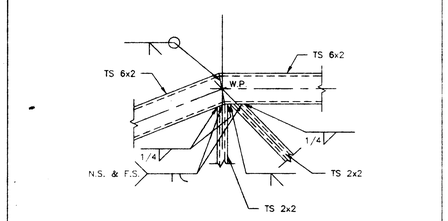

1 DETAIL
N.T.S

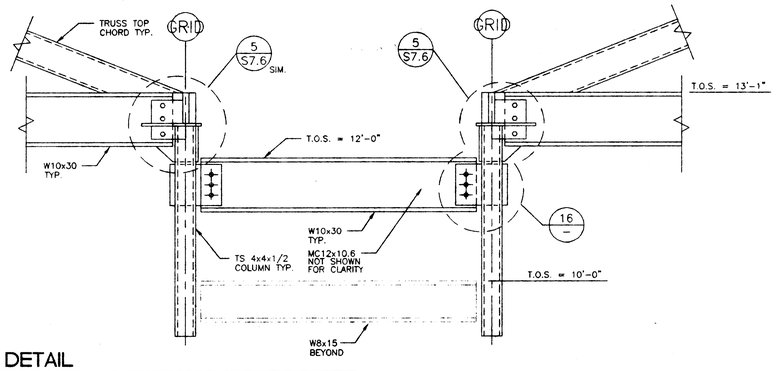

2 DETAIL
1"=1'-0"

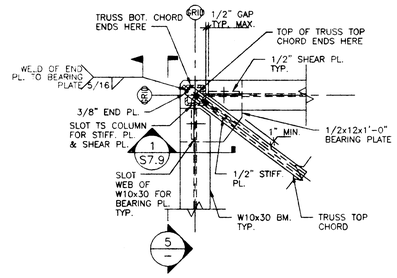

3 DETAIL
1"=1'-0"

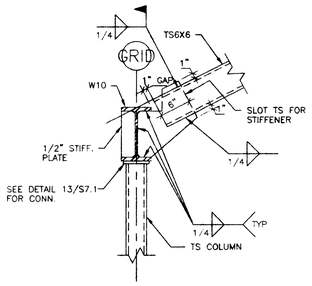

4 DETAIL
1"=1'-0"

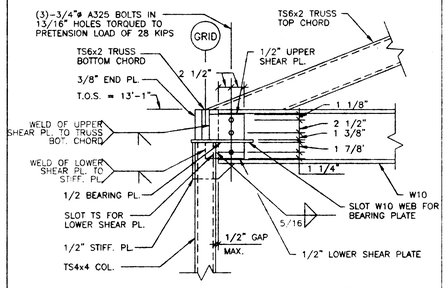

5 DETAIL
1"=1'-0"

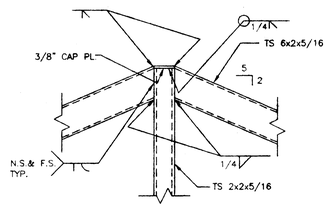

6 DETAIL
1"=1'-0"

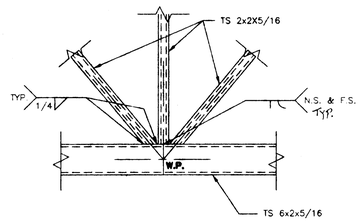

7 DETAIL
1"=1'-0"

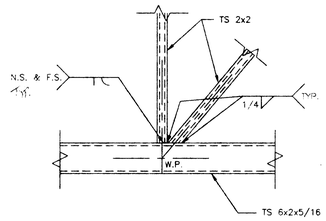

8 DETAIL
1"=1'-0"

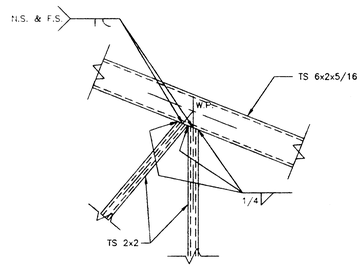

9 DETAIL
1"=1'-0"

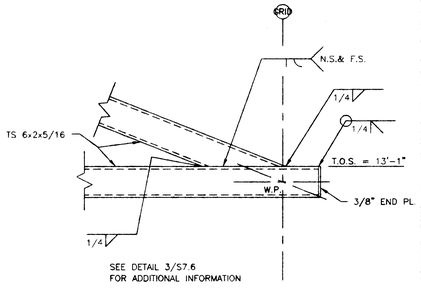

10 DETAIL
1"=1'-0"

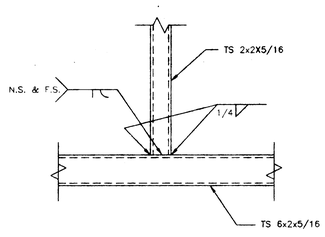

11 DETAIL
1"=1'-0"

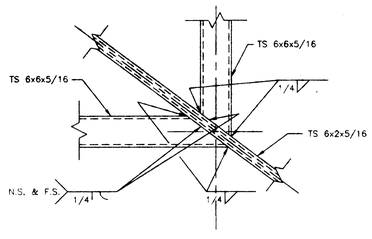

12 DETAIL
1"=1'-0"

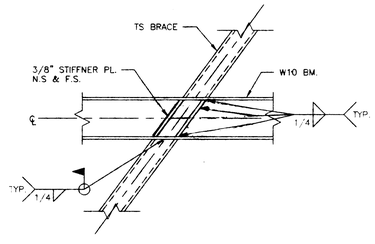

13 DETAIL
1"=1'-0"

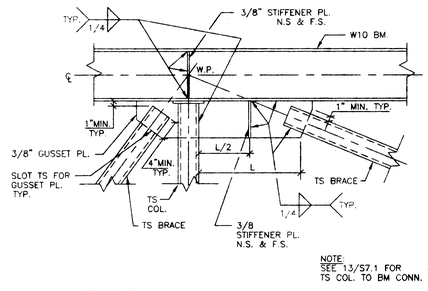

14 DETAIL
1"=1'-0"

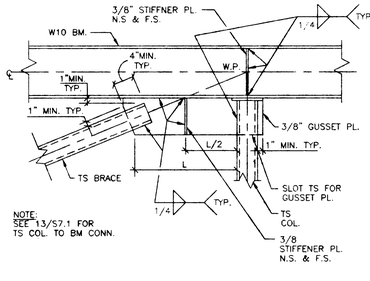

15 DETAIL
1"=1'-0"

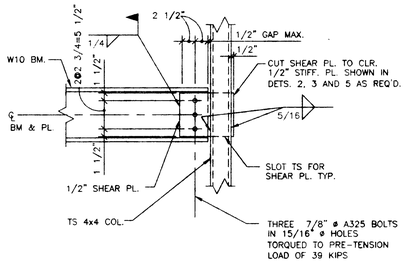

16 DETAIL
1"=1'-0"

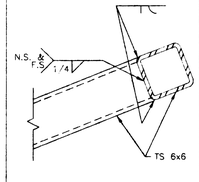

17 DETAIL
1"=1'-0"

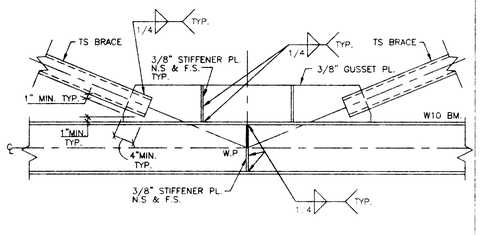

18 DETAIL
1"=1'-0"

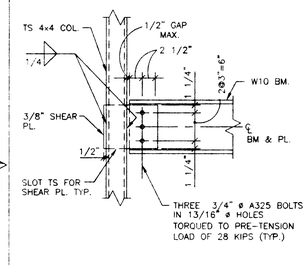

19 DETAIL
1"=1'-0"

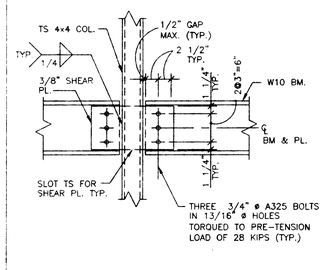

20 DETAIL
1"=1'-0"

HKA
Harlan Krusemark - Architect
4415 Cowell Road, Suite 230
Concord, CA 94521
Tel: 925.681.1905
Fax: 925.681.1906

REGISTERED ARCHITECT HARLAN KRUSEMARK STATE OF CALIFORNIA

MFT Consulting Engineers, Inc.
130 Howard Street, Suite 420
San Francisco, CA 94105
(415) 227-0880
Fax (415) 227-0883

REGISTERED PROFESSIONAL ENGINEER MARK FORD No. S 3185 Exp. 6/30/02 STATE OF CALIFORNIA STRUCTURAL

REGISTERED PROFESSIONAL ENGINEER MARK A. SCHEER No. SE 4349 Exp. 3-31-03 STATE OF CALIFORNIA

Revisions	Date

HAWKINS SCHOOL

475 Darlene Lane
Tracy, CA 95377

Jefferson School District
7500 West Linne Road
Tracy, CA 95304

DSA FILE NO. 39-39
IDENTIFICATION STAMP
DIVISION OF THE STATE ARCHITECT
APPL 02 -102225
AC. ~~FEB 2 1 2000~~
DATE ~~AUG 2 1 2000~~

Sheet Title:
BUIDING K: KINDERGARTEN
STEEL DETAILS AND SECTIONS

Printing Date / Purpose:
08/18/00 DSA APPROVAL

Scale: AS SHOWN
Project Number: 9906.00
Sheet Number:

S7.6

of Sheets

FILE: 99646-71

COPYRIGHT © 2000 HARLAN KRUSEMARK - ARCHITECT (HKA) THESE DRAWINGS ARE PROPRIETARY DOCUMENTS OF HKA AND ARE NOT TO BE DISTRIBUTED, PUBLISHED OR REPRODUCED WITHOUT WRITTEN PERMISSION OF HKA.

H:\PROJECTS\Hawkins\DWGS\08-18-00\S7.3\SCH\99646-7S9.dwg Sun Aug 20 11:42:03 2000

SHEET NOTES:

1. 1 1/2" COLD WATER DROP.
2. 2" VENT FROM BLOW.
3. 2" WASTE DOWN AND 1 1/2" VENT RISE.
4. 2" WASTE DOWN, 1 1/2" VENT RISE, AND 3/4" COLD WATER DROP.
5. CONNECT 4" WASTE TO SITE STUB.
6. CONNECT 2" COLD WATER TO VALVE IN BOX.
7. CONNECT 2" GAS TO VALVE IN BOX.
8. 1 1/2" VENT THROUGH ROOF.
9. 1 1/4" GAS DROP AND CONNECT TO FURNACE WITH GAS COCK AND UNION.
10. CONNECT 3" RWL TO 3" SD @ ±1/4" ABOVE GRADE AND DOWN TO 4" SD BELOW GRADE. COORDINATE WITH CONCRETE FOUNDATION AND SLAB ON GRADE-SEE STRUCTURAL DRAWINGS.
11. 4" COTG.
12. CONNECT 4" SD TO SITE STUB (I.E.=118.91').
13. 2" COLD WATER FROM BELOW GRADE.
14. 2" GAS FROM BELOW FLOOR, BRANCH 1 1/4" PIPE AND CONNECT TO FURNACE WITH GAS COCK AND UNION, AND 1 1/4" GAS RISE.
15. 3" RWL CONNECT TO 4" SD BELOW GRADE.

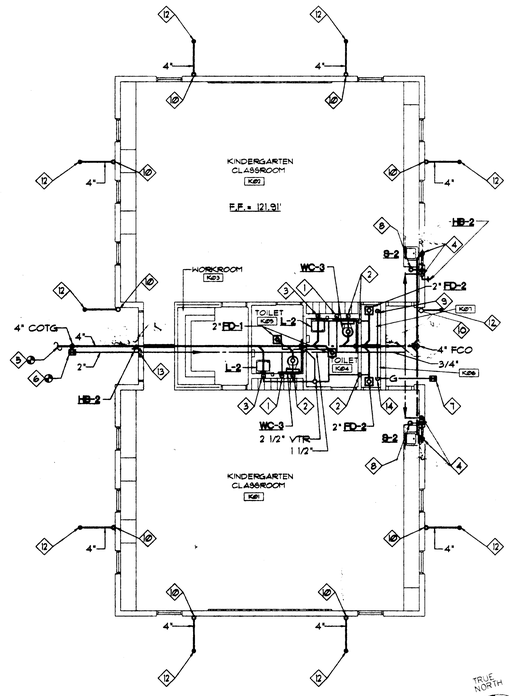

1 BUILDING K - KINDERGARTEN
SCALE: 1/8" = 1'-0"

HKA
Harlan Krusemark - Architect
4415 Cowell Road, Suite 230
Concord, CA 94521
Tel: 925.681.1905
Fax: 925.681.1906

LICENSED ARCHITECT HARLAN KRUSEMARK No. C23833 Exp. 9/30/01 STATE OF CALIFORNIA

HM MECHANICAL GROUP
2220 LIVINGSTON ST
SUITE 200
OAKLAND, CA
94606
510-261-5000 TEL
510-261-5003 FAX
HM5000@AOL.COM

REGISTERED PROFESSIONAL ENGINEER GEORGE L. MARCHESE No. M20245 Exp. 9/00 MECHANICAL STATE OF CALIFORNIA

Revisions | Date

HAWKINS SCHOOL
(INCREMENT #2)

475 Darlene Lane
Tracy, CA 95377

Jefferson School District
7500 West Linne Road
Tracy, CA 95304

DSA FILE NO. 39-39
IDENTIFICATION STAMP
DIVISION OF THE STATE ARCHITECT
APPL 02 -102225
AC ___ FLS RRC SS ___
DATE AUG 2 4 2000

Sheet Title:
BUILDING K

Printing Date / Purpose:
08/18/00 DSA APPROVAL

Scale: 1" = 8'-0"
Project Number: 9903.00
Sheet Number:

P2.2

of Sheets

FILE:

COPYRIGHT © 2000 HARLAN KRUSEMARK - ARCHITECT (HKA) THESE DRAWINGS ARE PROPRIETARY DOCUMENTS OF HKA AND ARE NOT TO BE DISTRIBUTED, PUBLISHED OR REPRODUCED WITHOUT WRITTEN PERMISSION OF HKA.

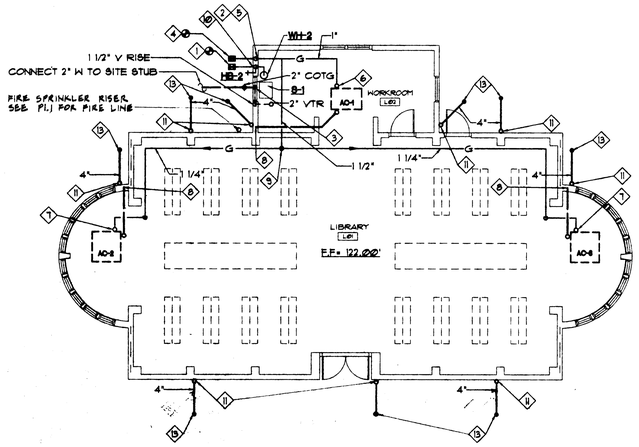

1 BUILDING L - LIBRARY
SCALE: 1/8" = 1'-0"

SHEET NOTES:

1. CONNECT 1" COLD WATER TO VALVE IN BOX.
2. 2" GAS FROM BELOW GRADE, BELOW CABINET AND OFFSET IN WALL.
3. 2" WASTE DOWN AND 1 1/2" VENT OFFSET.
4. CONNECT 2" GAS TO VALVE IN BOX.
5. 2" GAS RISE TO CEILING SPACE.
6. 1" GAS UP TO ROOF AND CONNECT TO EQUIPMENT WITH GAS COCK AND UNION.
7. 1 1/4" GAS DROP AND THROUGH WALL TO ROOF AND CONNECT TO AC-UNIT WITH GAS COCK AND UNION.
8. 3/4" CONDENSATE DRAIN FROM EQUIPMENT TO TERMINATE INSIDE OF SCUPPER.
9. 1 1/2" GAS RISE AS HIGH AS POSSIBLE.
10. 1" COLD WATER FROM BELOW GRADE AND CONNECT TO S-1, AND WH-2 IN CABINET, AND HB-2 IN WALL.
11. CONNECT 3" RWL TO 3" SD @ 1/2" ABOVE GRADE AND DOWN TO 4" SD BELOW GRADE. COORDINATE WITH CONCRETE FOUNDATION AND SLAB ON GRADE-SEE STRUCTURAL DRAWING.
12. 4" COTG.
13. CONNECT 4" SD TO SITE STUB (I.E.=119.00').

HKA
Harlan Krusemark - Architect
4415 Cowell Road, Suite 230
Concord, CA 94521
Tel: 925.681.1905
Fax: 925.681.1906

LICENSED ARCHITECT HARLAN KRUSEMARK No. C23833 Exp. 9/30/01 STATE OF CALIFORNIA

HM MECHANICAL GROUP
2220 LIVINGSTON ST. SUITE 280 OAKLAND, CA 94606
510-261-6000 TEL
510-261-5063 FAX
HM5000@AOL.COM

REGISTERED PROFESSIONAL ENGINEER GARY A. KRUSEMARK No. M20245 Exp. 9/00 MECHANICAL STATE OF CALIFORNIA

Revisions Date

HAWKINS SCHOOL
(INCREMENT #2)

475 Darlene Lane
Tracy, CA 95377

Jefferson School District
7500 West Linne Road
Tracy, CA 95304

DSA FILE NO. 39-39
IDENTIFICATION STAMP
DIVISION OF THE STATE ARCHITECT
APPL 02 -102225
AC ___ FLS: ___ BS ___
DATE AUG 2 4 2000

Sheet Title:

Printing Date / Purpose:
08/18/00 DSA APPROVAL

Scale: 1" = 8'-0"
Project Number: 9903.00
Sheet Number:

P2.3

of Sheets

FILE:

COPYRIGHT © 2000 HARLAN KRUSEMARK - ARCHITECT (HKA) THESE DRAWINGS ARE PROPRIETARY DOCUMENTS OF HKA AND ARE NOT TO BE DISTRIBUTED, PUBLISHED OR REPRODUCED WITHOUT WRITTEN PERMISSION OF HKA.

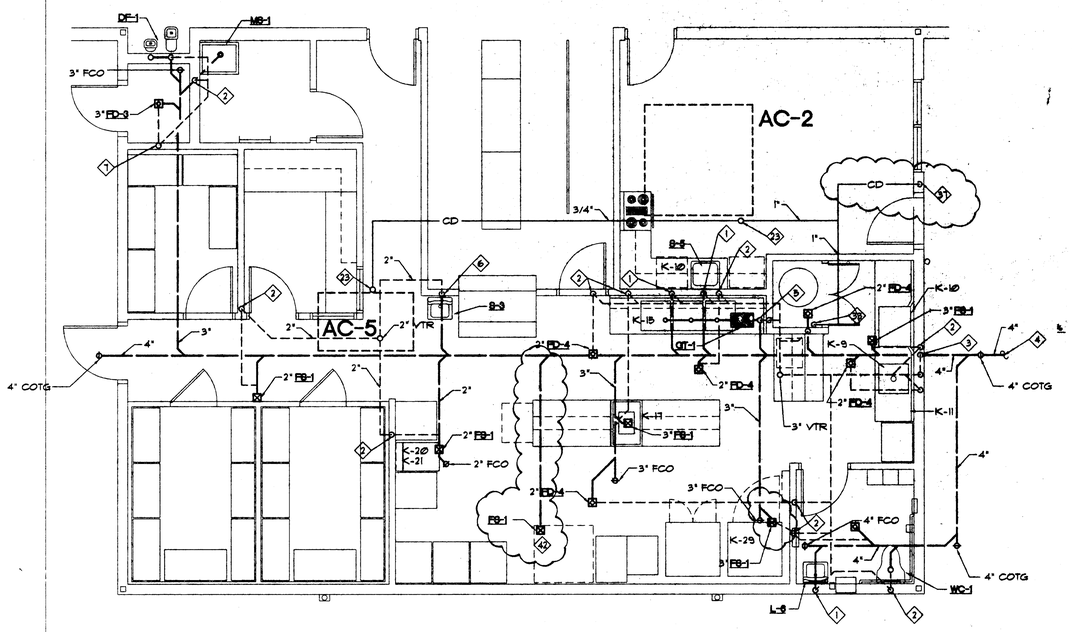

1 BUILDING M - KITCHEN
SCALE: 1/4" = 1'-0"

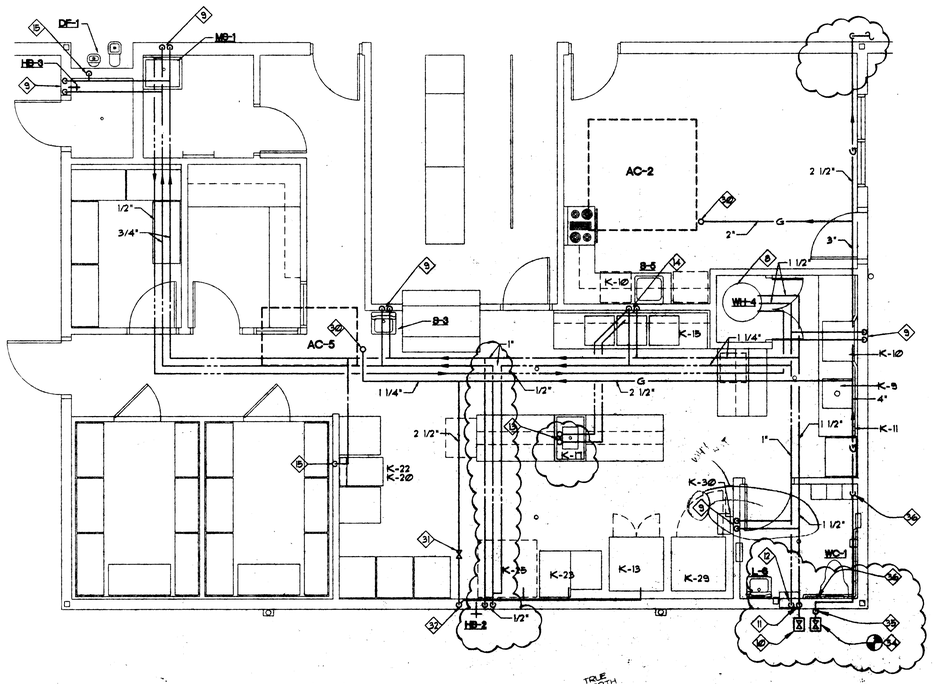

2 BUILDING M - KITCHEN
SCALE: 1/4" = 1'-0"

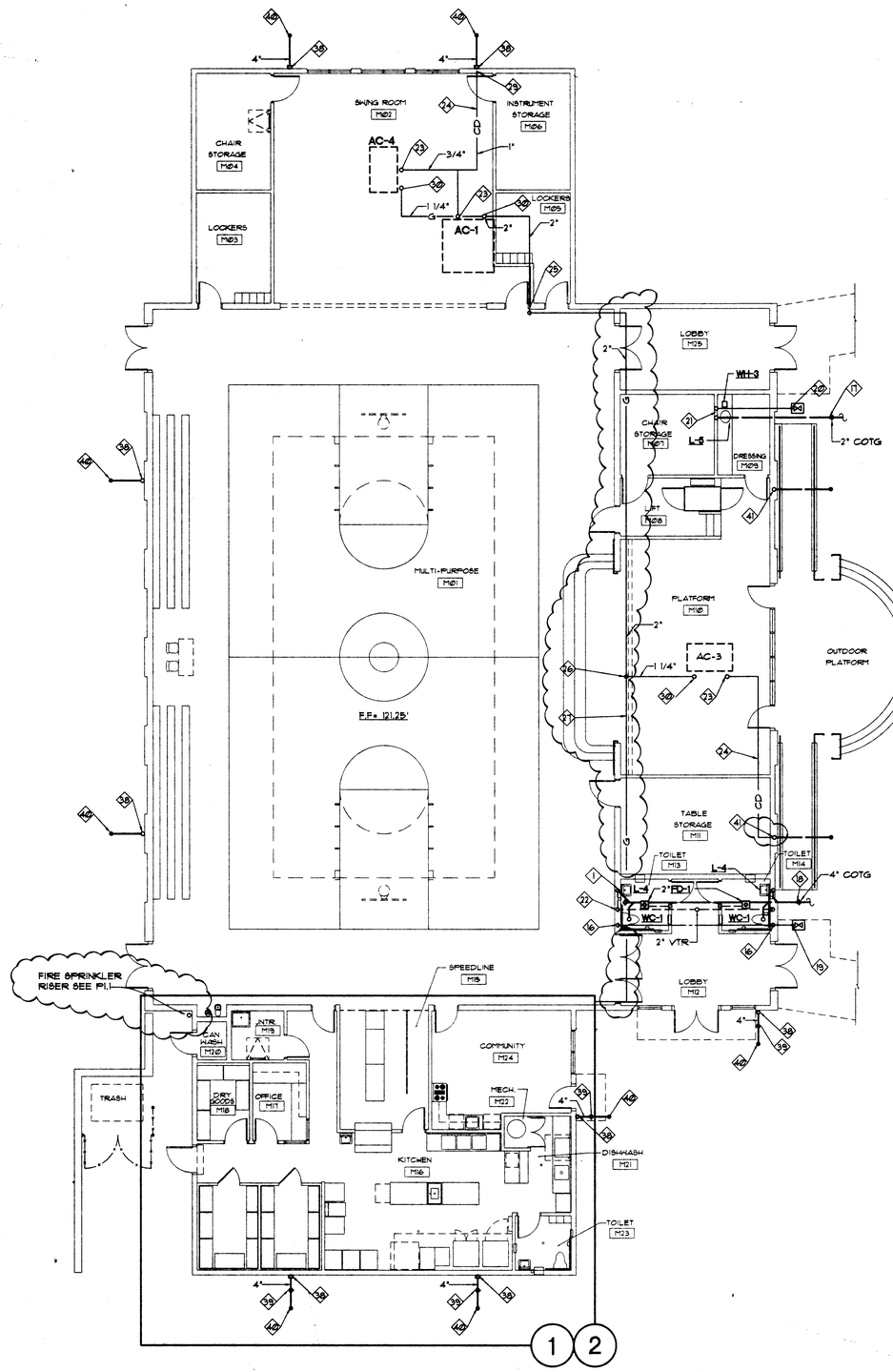

3 BUILDING M - MULTI-PURPOSE
SCALE: 1/8" = 1'-0"

SHEET NOTES:

1. 2" WASTE DOWN AND 1 1/2" VENT RISE.
2. 2" VENT FROM BELOW.
3. 2" WASTE OFFSET AND DOWN, 1 1/2" VENT RISE.
4. CONNECT 4" WASTE TO SITE STUB.
5. 3" WASTE DOWN AND 1 1/2" VENT OFFSET IN WALL AND RISE.
6. 2" WASTE DOWN WITH WALL CLEAN OUT AND 1 1/2" VENT UP.
7. 2" VENT FROM BELOW AND VENT THROUGH ROOF.
8. SEE WATER HEATER DETAIL 4/P3.1.
9. 3/4" HOT AND COLD WATER DROP.
10. CONNECT 2" COLD WATER TO VALVE IN BOX.
11. 2" COLD WATER FROM BELOW.
12. 1 1/2" COLD WATER AND 3/4" HOT WATER DROP.
13. 3/4" HOT AND COLD WATER FROM BELOW FLOOR.
14. 3/4" HOT AND COLD WATER DROP TO B-1 AND K-15. 3/4" HOT & COLD WATER DOWN TO BELOW FLOOR. RUN 1 1/2" HOT WATER TO DISHWASHER (K-10).
15. 3/4" COLD WATER DROP.
16. 1 1/2" COLD WATER DROP.
17. CONNECT 2" WASTE TO SITE STUB.
18. CONNECT 4" WASTE TO SITE STUB.
19. CONNECT 1 1/2" COLD WATER TO VALVE IN BOX.
20. CONNECT 3/4" COLD WATER TO VALVE IN BOX.
21. 2" WASTE DOWN WITH WCO. 1 1/2" V.T.R AND 1" COLD WATER FROM BELOW.
22. 2" VENT FROM BELOW.
23. 3/4" CONDENSATE DRAIN FROM EQUIPMENT.
24. RUN CONDENSATE DRAIN ON ROOF. PER DE. 2/P3.2
25. 2" GAS DROP TO CEILING SPACE.
26. 1 1/4" GAS DROP TO LOWER CEILING.
27. 2" GAS IN CLG. SPACE.
28. NOT USED
29. TERMINATE CONDENSATE DRAIN INSIDE OF SCUPPER DRAIN.
30. GAS UP TO ROOF AND CONNECT TO AC-UNIT WITH GAS COCK AND UNION.
31. ANSUL SOLENOID VALVE.
32. 2 1/2" GAS DROP TO GAS HEADER IN BACK OF KITCHEN EQUIPMENT.
33. 1" CONDENSATE DROP AND TERMINATE ABOVE FLOOR DRAIN.
34. CONNECT 4" GAS TO VALVE IN BOX.
35. 4" GAS FROM BELOW GRADE.
36. 4" GAS RISE TO CEILING SPACE.
37. 3/4" PUMPED CONDENSATE DRAIN UP TO CEILING.
38. CONNECT 3" RAIL TO 3" SD @ +18" ABOVE GRADE AND DOWN TO 4" SD BELOW GRADE. COORDINATE WITH CONCRETE FOUNDATION AND SLAB ON GRADE-SEE STRUCTURAL DRAWING.
39. 4" COTG.
40. CONNECT 4" SD TO SITE STUB (I.E.=118.25').
41. 3" RAIL CONNECT TO 4" SD BELOW GRADE.
42. FS RIM SHALL BE FLUSH W/FLR & BOWL SHALL BE CENTERED UNDER TANGENT DRAW-OFF VALVE OUTLET.

HKA
Harlan Krusemark - Architect
4415 Cowell Road, Suite 230
Concord, CA 94521
Tel: 925.681.1905
Fax: 925.681.1906

LICENSED ARCHITECT HARLAN KRUSEMARK No. C23633 Exp. 9/30/01 STATE OF CALIFORNIA

HM MECHANICAL GROUP
2220 LIVINGSTON ST.
OAKLAND, CA
510/261-[illegible]
510/261-[illegible]
HM@COMCAST.NET

REGISTERED PROFESSIONAL ENGINEER RICHARD L. MEDDING No. M8096 Exp. 12/31 MECHANICAL STATE OF CALIFORNIA

Revisions	Date

HAWKINS SCHOOL (INCREMENT #2)
475 Darlene Lane
Tracy, CA 95377

Jefferson School District
7500 West Linne Road
Tracy, CA 95304

DSA FILE NO. 39-30
IDENTIFICATION STAMP
DIVISION OF THE STATE ARCHITECT
APPL 02 -102225
AC___ FLR___ GR___
DATE___

Sheet Title:
BUILDING M

Printing Date / Purpose:
08/18/00 DSA APPROVAL

Scale: AS NOTED
Project Number: 9[illegible]9.00
Sheet Number:

P2.4

Sheet

FILE:

COPYRIGHT © 2000 HARLAN KRUSEMARK - ARCHITECT (HKA) THESE DRAWINGS ARE PROPRIETARY DOCUMENTS OF HKA AND ARE NOT TO BE DISTRIBUTED, PUBLISHED OR REPRODUCED WITHOUT WRITTEN PERMISSION OF HKA.

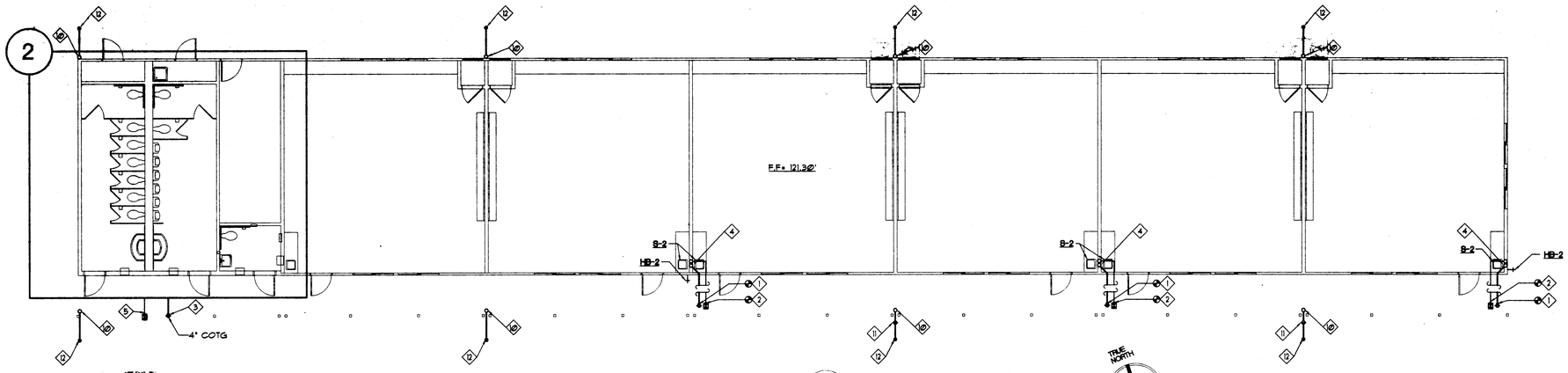

1 BUILDING D - 2ND GRADE
SCALE: 1/8" = 1'-0"

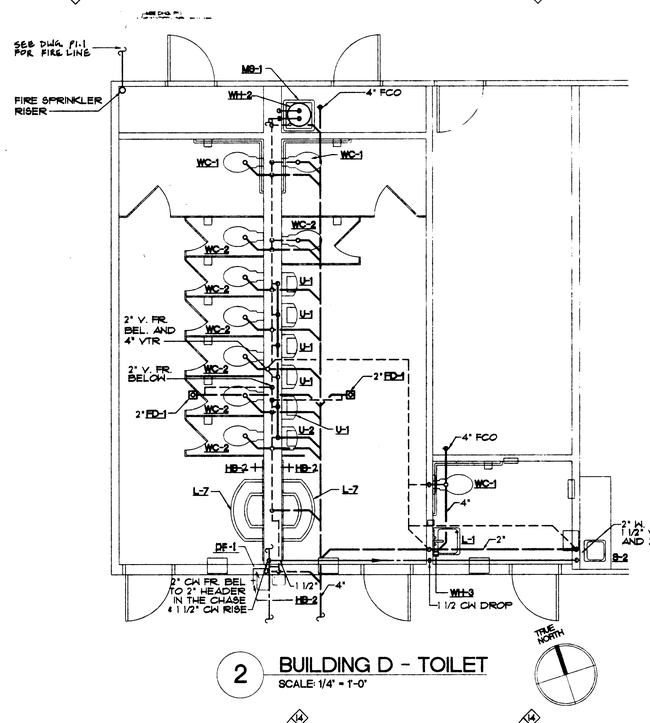

2 BUILDING D - TOILET
SCALE: 1/4" = 1'-0"

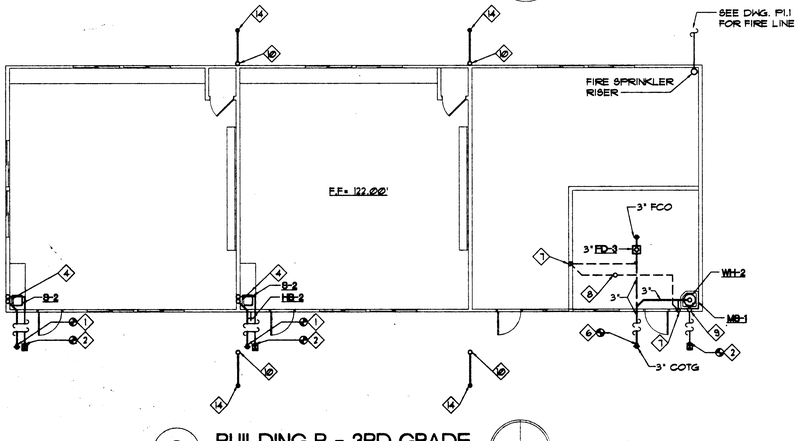

3 BUILDING B - 3RD GRADE
SCALE: 1/8" = 1'-0"

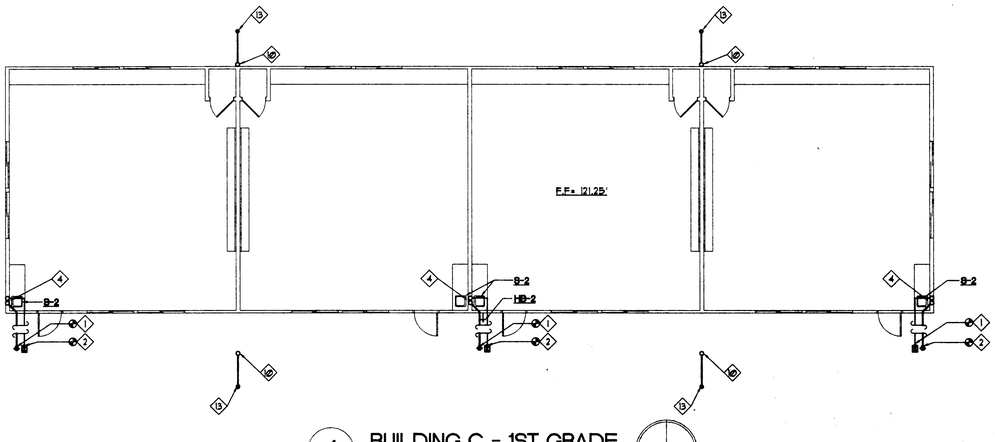

4 BUILDING C - 1ST GRADE
SCALE: 1/8" = 1'-0"

SHEET NOTES:

1. CONNECT 2" WASTE TO SITE STUB. SEE DWG. P1.1
2. CONNECT 3/4" COLD WATER TO VALVE IN BOX. SEE DWG. P1.1
3. CONNECT 4" WASTE TO SITE STUB. SEE DWG. P1.1
4. 2" WASTE DOWN WITH WCO, 1 1/2" V.T.R AND 3/4" COLD WATER FROM BELOW.
5. CONNECT 2" COLD WATER TO VALVE IN BOX. SEE DWG. P1.1
6. CONNECT 3" WASTE TO SITE STUB. SEE DWG P1.1
7. 2" VENT FROM BELOW FLOOR.
8. 2" VENT THROUGH ROOF.
9. 3/4" COLD WATER FROM BELOW.
10. CONNECT 3" RWL TO 3" SD @ +12" ABOVE GRADE AND DOWN TO 4" SD BELOW GRADE.
11. 4" COTG.
12. CONNECT 4" SD TO SITE STUB (I.E.= 118.30').
13. CONNECT 4" SD TO SITE STUB (I.E.= 118.25').
14. CONNECT 4" SD TO SITE STUB (I.E.= 119.00').

GENERAL NOTE:

ALL PLUMBING WORK ON THIS DRAWING TO BE DONE BY THE MODULAR BUILDING MANUFACTURER AS PART OF INCREMENT #2.

HKA
Harlan Krusemark - Architect
4415 Cowell Road, Suite 230
Concord, CA 94521
Tel: 925.681.1905
Fax: 925.681.1906

HM MECHANICAL GROUP
2220 LIVINGSTON ST SUITE 200 OAKLAND, CA 94606
510-261-5000 TEL
510-261-5003 FAX
HM5000@AOL.COM

Revisions	Date
△	
△	
△	
△	
△	
△	

HAWKINS SCHOOL
(INCREMENT #2)

475 Darlene Lane
Tracy, CA 95377

Jefferson School District
7500 West Linne Road
Tracy, CA 95304

DSA FILE NO. 39-39
IDENTIFICATION STAMP
DIVISION OF THE STATE ARCHITECT
APPL 02 -102225
AC ___ FLS ___ 86
DATE AUG 2 4 2000

Sheet Title:
BUIDING B,C,AND D

Printing Date / Purpose:
08/18/00 DSA APPROVAL

Scale: AS NOTED
Project Number: 9903.00
Sheet Number:
P2.6
of Sheets
FILE:

COPYRIGHT © 2000 HARLAN KRUSEMARK - ARCHITECT (HKA) THESE DRAWINGS ARE PROPRIETARY DOCUMENTS OF HKA AND ARE NOT TO BE DISTRIBUTED, PUBLISHED OR REPRODUCED WITHOUT WRITTEN PERMISSION OF HKA.

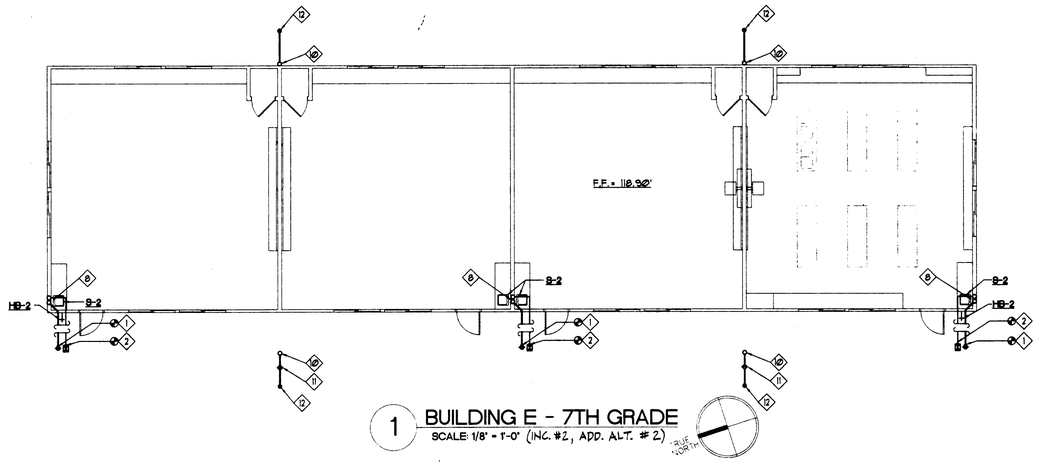

1 BUILDING E - 7TH GRADE
SCALE: 1/8" = 1'-0" (INC. #2, ADD. ALT. #2)

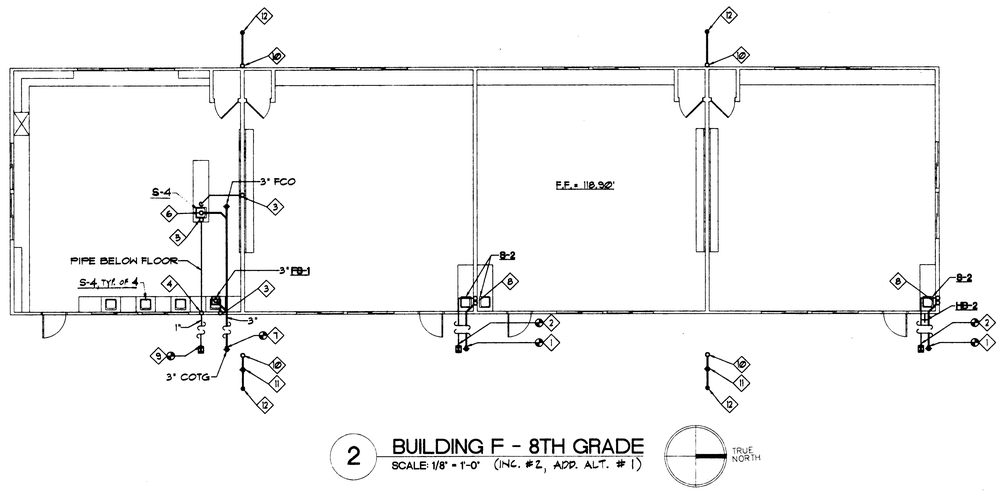

2 BUILDING F - 8TH GRADE
SCALE: 1/8" = 1'-0" (INC. #2, ADD. ALT. #1)

SHEET NOTES:

1. CONNECT 2" WASTE TO SITE STUB. SEE DWG. P1.1
2. CONNECT 3/4" COLD WATER TO VALVE IN YARD BOX. SEE DWG. P1.1
3. 2" VENT FROM BELOW AND VENT THROUGH ROOF.
4. 1" COLD WATER FROM BELOW FLOOR TO PIPE CHASE.
5. 3/4" COLD WATER FROM BELOW FLOOR.
6. ISLAND WASTE AND VENT.
7. CONNECT 3" WASTE TO SITE STUB. SEE DWG. P1.1
8. 2" WASTE DOWN WITH WCO, 1 1/2" V.T.R AND 3/4" COLD WATER FROM BELOW.
9. CONNECT 1" COLD WATER TO VALVE IN YARD BOX. SEE DWG. P1.1
10. CONNECT 3" RWL TO 3" SD @ +12" ABOVE GRADE AND DOWN TO 4" SD BELOW GRADE.
11. 4" COTG.
12. CONNECT 4" SD TO SITE STUB (I.E. = 115.90').

GENERAL NOTE:

ALL PLUMBING WORK ON THIS DRAWING TO BE DONE BY THE MODULAR BUILDING MANUFACTURER AS PART OF INCREMENT #2.

HKA
Harlan Krusemark - Architect
4415 Cowell Road, Suite 230
Concord, CA 94521
Tel: 925.681.1905
Fax: 925.681.1906

LICENSED ARCHITECT
HARLAN KRUSEMARK
No. C23823
Exp. 9/30/01
STATE OF CALIFORNIA

HM MECHANICAL GROUP
2220 LIVINGSTON ST
SUITE 200
OAKLAND, CA
94606
510-261-5000 TEL
510-261-5003 FAX
HMSCOO@AOL.COM

REGISTERED PROFESSIONAL ENGINEER
No. M20245
Exp. 9/00
MECHANICAL
STATE OF CALIFORNIA

Revisions | Date

HAWKINS SCHOOL
(INCREMENT #2)

475 Darlene Lane
Tracy, CA 95377

Jefferson School District
7500 West Linne Road
Tracy, CA 95304

DSA FILE NO. 39-39
IDENTIFICATION STAMP
DIVISION OF THE STATE ARCHITECT
APPL 02 -102225
AC ___ FLS. RPC SS ___
DATE AUG 2 4 2009

Sheet Title:
BUILDING E AND F

Printing Date / Purpose:
08/18/00 DSA APPROVAL

Scale: 1" = 8'-0"
Project Number: 9908.00
Sheet Number:

P2.7

of Sheets
FILE:

COPYRIGHT © 2000 HARLAN KRUSEMARK - ARCHITECT (HKA) THESE DRAWINGS ARE PROPRIETARY DOCUMENTS OF HKA AND ARE NOT TO BE DISTRIBUTED, PUBLISHED OR REPRODUCED WITHOUT WRITTEN PERMISSION OF HKA.

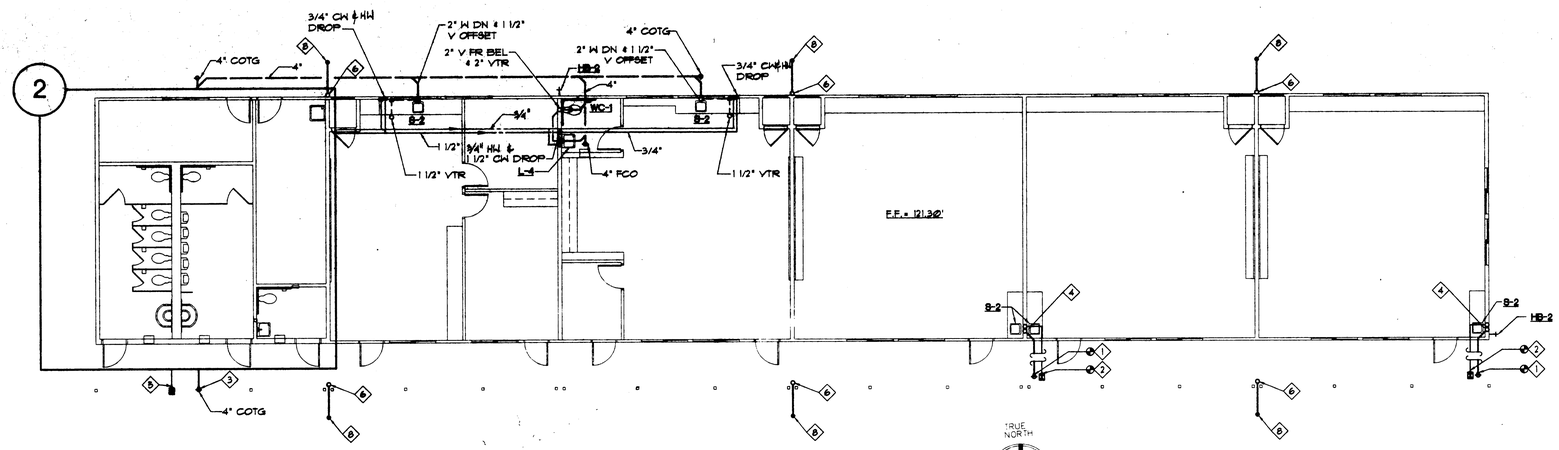

1 BUILDING G - 6TH GRADE
SCALE: 1/8" = 1'-0"

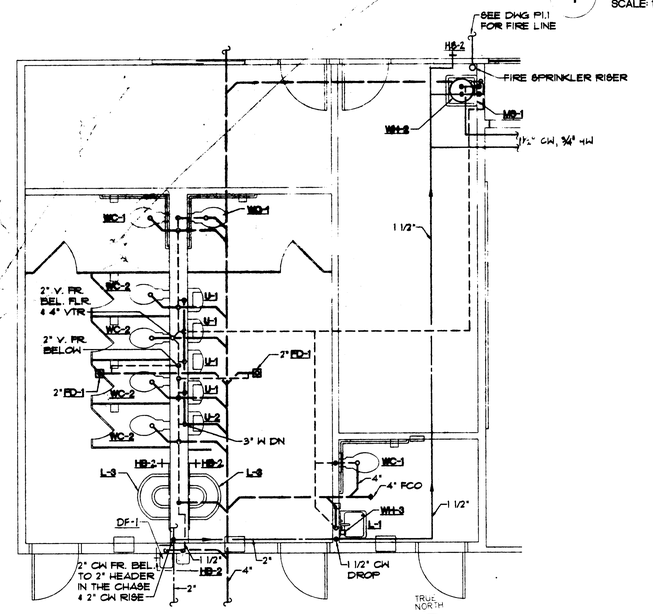

2 BUILDING G - TOILET
SCALE: 1/4" = 1'-0"

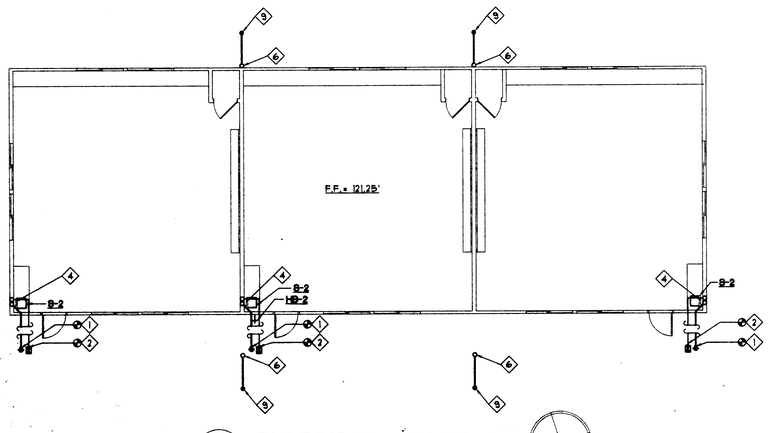

3 BUILDING H - 5TH GRADE
SCALE: 1/8" = 1'-0"

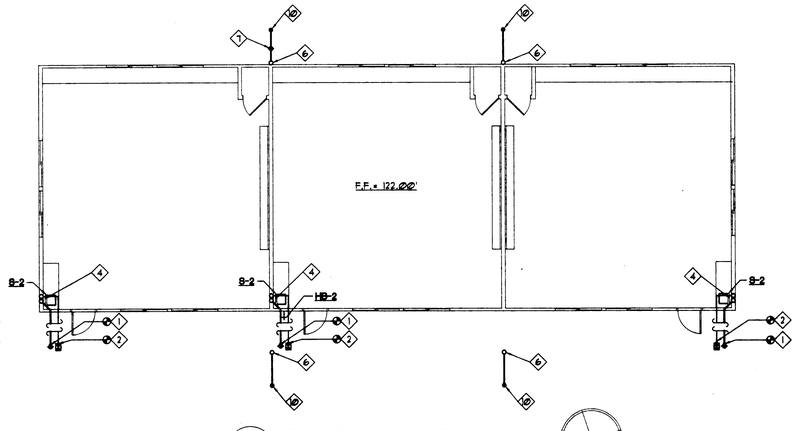

4 BUILDING J - 4TH GRADE
SCALE: 1/8" = 1'-0"

SHEET NOTES:

1. CONNECT 2" WASTE TO SITE STUB. SEE DWG. P1.1
2. CONNECT 3/4" COLD WATER TO VALVE IN BOX. SEE DWG. P1.1
3. CONNECT 4" WASTE TO SITE STUB. SEE DWG. P1.1
4. 2" WASTE DOWN WITH WCO, 1 1/2" V.T.R AND 3/4" COLD WATER FROM BELOW.
5. CONNECT 2" COLD WATER TO VALVE IN BOX. SEE DWG. P1.1
6. CONNECT 3" RWL TO 3" SD @ +12" ABOVE GRADE AND DOWN TO 4" SD BELOW GRADE.
7. 4" COTG.
8. CONNECT 4" SD TO SITE STUB (I.E. = 118.30').
9. CONNECT 4" SD TO SITE STUB (I.E. = 118.25').
10. CONNECT 4" SD TO SITE STUB (I.E. = 119.00').

GENERAL NOTE:

ALL PLUMBING WORK ON THIS DRAWING TO BE DONE BY THE MODULAR BUILDING MANUFACTURER AS PART OF INCREMENT #2.

HKA
Harlan Krusemark - Architect
4415 Cowell Road, Suite 230
Concord, CA 94521
Tel: 925.681.1905
Fax: 925.681.1906

REGISTERED ARCHITECT HARLAN KRUSEMARK No. C23833 Exp. 9/30/01 STATE OF CALIFORNIA

H&M MECHANICAL GROUP
2220 LIVINGSTON ST
SUITE 200
OAKLAND, CA
94606
510-281-5000 TEL
510-281-5009 FAX
HM5000@AOL.COM

REGISTERED PROFESSIONAL ENGINEER No. M20245 Exp. 6/00 MECHANICAL STATE OF CALIFORNIA

Revisions	Date

HAWKINS SCHOOL
(INCREMENT #2)

475 Darlene Lane
Tracy, CA 95377

Jefferson School District
7500 West Linne Road
Tracy, CA 95304

DSA FILE NO. 39-39
IDENTIFICATION STAMP
DIVISION OF THE STATE ARCHITECT
APPL 02 -102225
AC ___ FLS RPC SS
DATE AUG 2 4 2000

Sheet Title:

BILDING G,H AND J

Printing Date / Purpose:
02/08/08 DSA APPROVAL

Scale: AS NOTED
Project Number: 9903.00
Sheet Number:

P2.8

of Sheets

FILE:

COPYRIGHT © 2000 HARLAN KRUSEMARK - ARCHITECT (HKA) THESE DRAWINGS ARE PROPRIETARY DOCUMENTS OF HKA AND ARE NOT TO BE DISTRIBUTED, PUBLISHED OR REPRODUCED WITHOUT WRITTEN PERMISSION OF HKA.

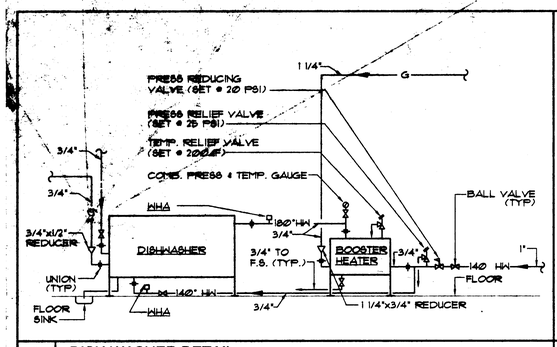

1 DISH WASHER DETAIL NO SCALE

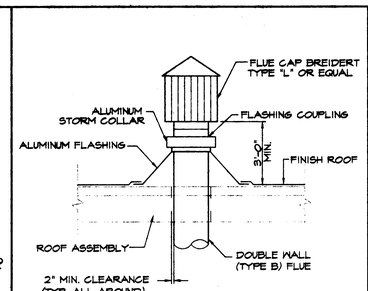

5 FLU THROUGH ROOF NO SCALE

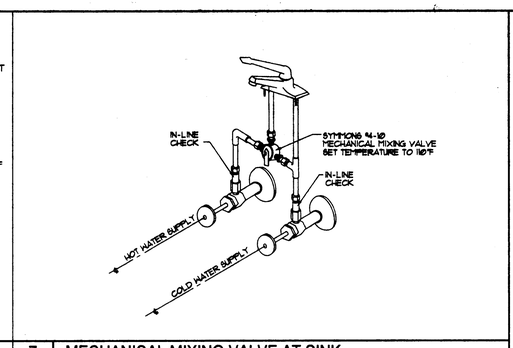

7 MECHANICAL MIXING VALVE AT SINK NO SCALE

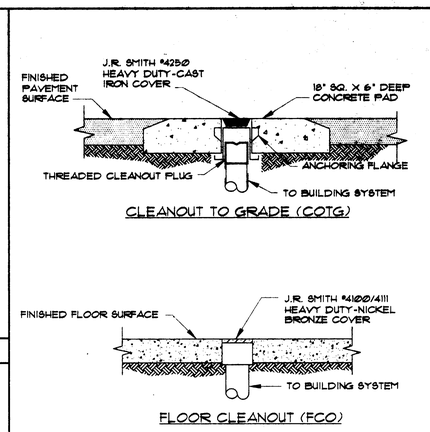

11 CLEANOUT NO SCALE

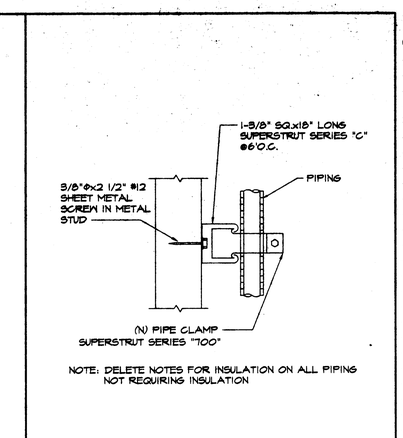

14 PIPE SUPPORT @ WALL NO SCALE

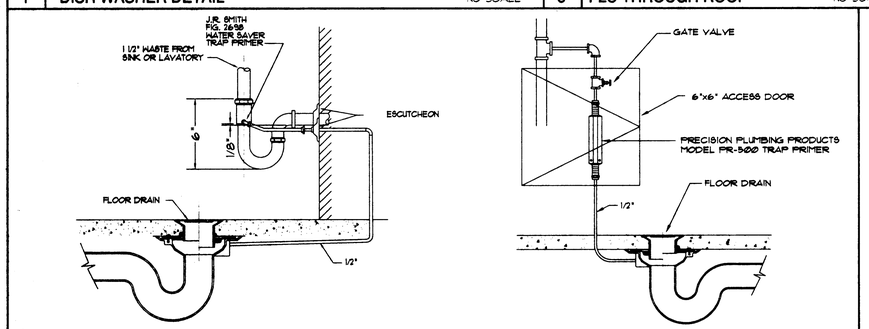

2 TRAP PRIMER DETAILS NO SCALE

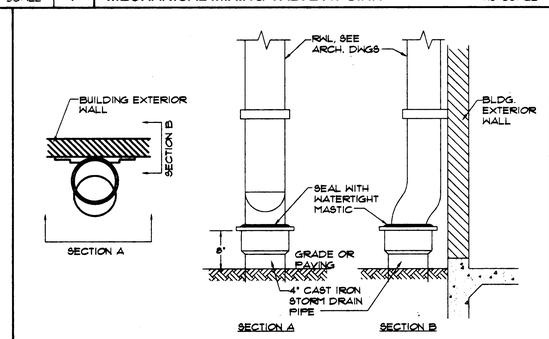

8 RAINWATER LEADER NO SCALE

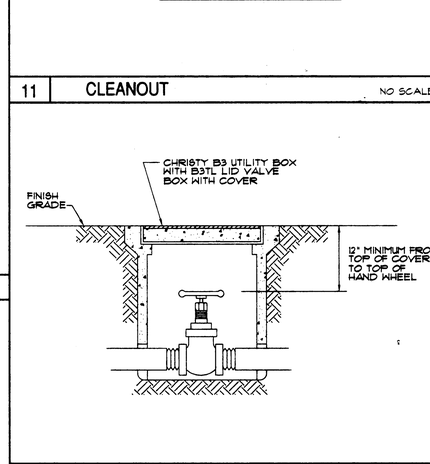

12 VALVE IN YARD BOX NO SCALE

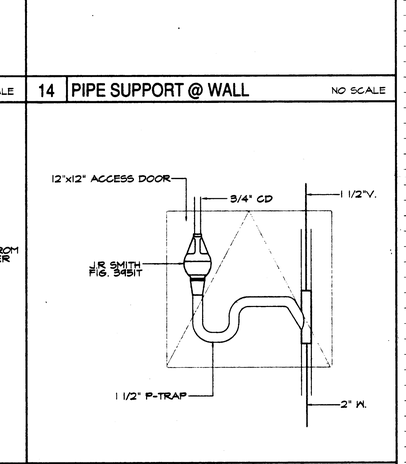

15 AIR GAP FITTING IN WALL NO SCALE

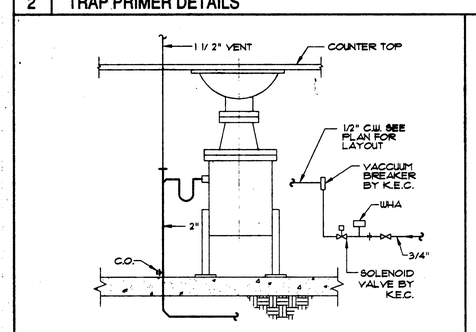

3 DISPOSER DETAIL NO SCALE

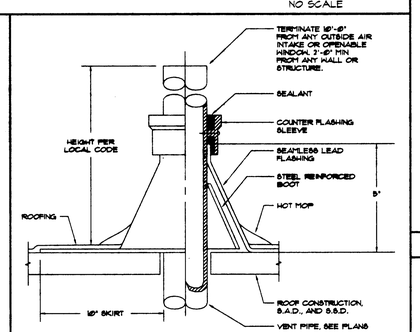

6 VENT THROUGH ROOF NO SCALE

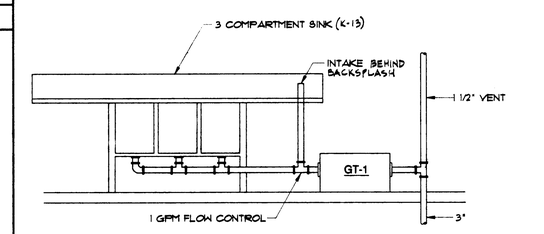

9 GREASE INTERCEPTOR NO SCALE

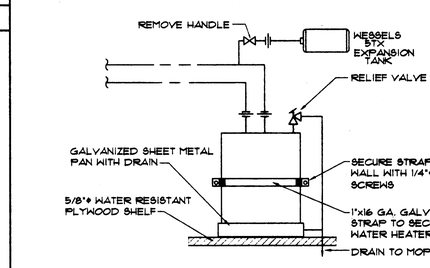

13 WATER HEATER ON SHELF NO SCALE

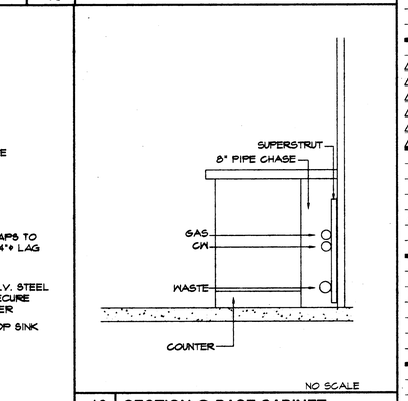

16 SECTION @ BASE CABINET NO SCALE

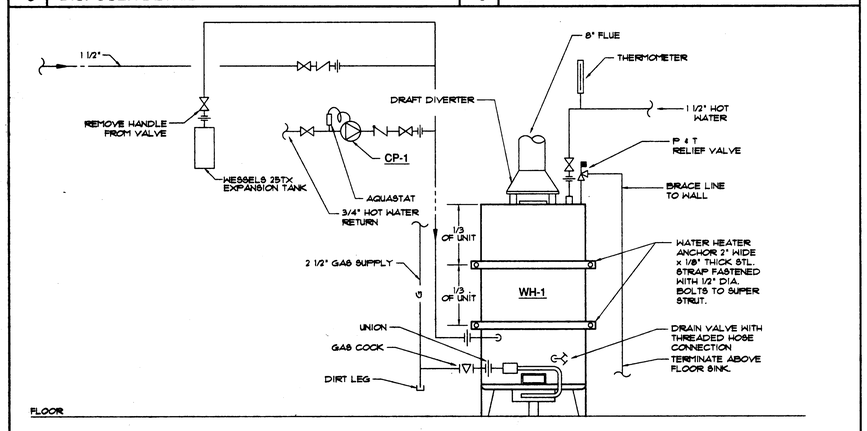

4 WATER HEATER DETAIL NO SCALE

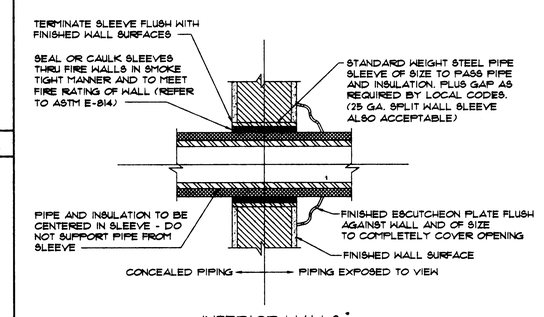

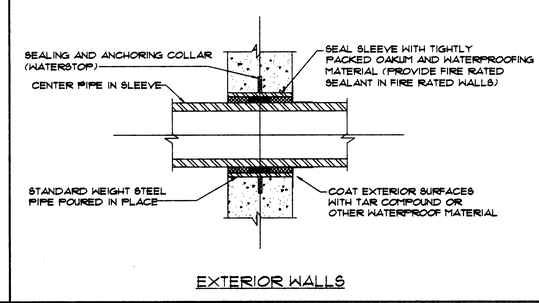

10 PIPING THROUGH WALL NO SCALE

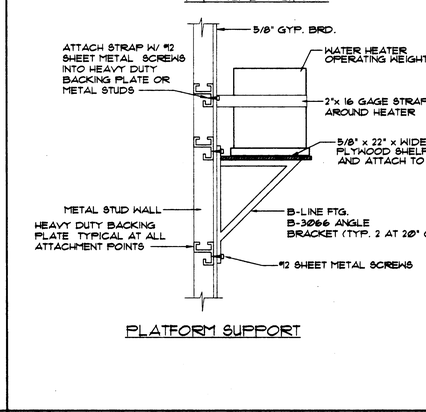

17 ISLAND VENT DETAIL NO SCALE

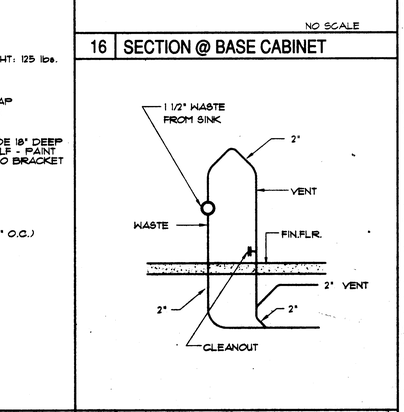

HKA
Harlan Krusemark - Architect
4415 Cowell Road, Suite 230
Concord, CA 94521
Tel: 925.681.1905
Fax: 925.681.1906

LICENSED ARCHITECT HARLAN KRUSEMARK No. C23833 Exp. 9/30/01 STATE OF CALIFORNIA

H&M MECHANICAL GROUP
2220 LIVINGSTON ST
SUITE 200
OAKLAND, CA
94606
510-261-5000 TEL
510-261-5003 FAX
HM5000@AOL.COM

REGISTERED PROFESSIONAL ENGINEER R. L. BERNER No. M20245 Exp. 9/00 MECHANICAL STATE OF CALIFORNIA

Revisions	Date

HAWKINS SCHOOL
(INCREMENTS #1 & #2)

475 Darlene Lane
Tracy, CA 95377

Jefferson School District
7500 West Linne Road
Tracy, CA 95304

DSA FILE NO. 39-39
IDENTIFICATION STAMP
DIVISION OF THE STATE ARCHITECT
APPL 02 -102225
AC ___ FS 8/08 SS FFF
DATE AUG 2 4 2000

Sheet Title:
PLUMBING DETAILS

Printing Date / Purpose:
08/18/00 DSA APPROVAL

Scale: NONE
Project Number: 9903.00
Sheet Number:

P3.1

of Sheets

FILE:

COPYRIGHT © 2000 HARLAN KRUSEMARK - ARCHITECT (HKA) THESE DRAWINGS ARE PROPRIETARY DOCUMENTS OF HKA AND ARE NOT TO BE DISTRIBUTED, PUBLISHED OR REPRODUCED WITHOUT WRITTEN PERMISSION OF HKA.

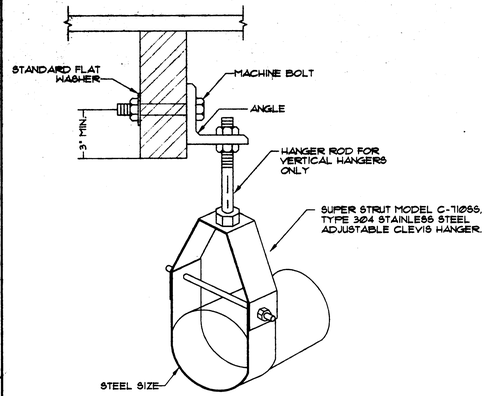

1 HANGER PIPE SUPPORT DETAIL NO SCALE

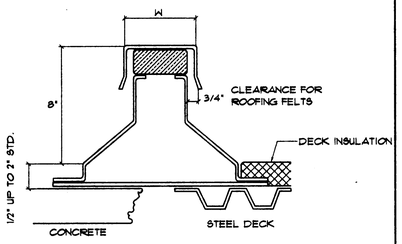

MODEL TEMS-1
EQUIPMENT SUPPORTS FOR INSULATED ROOF DECKS

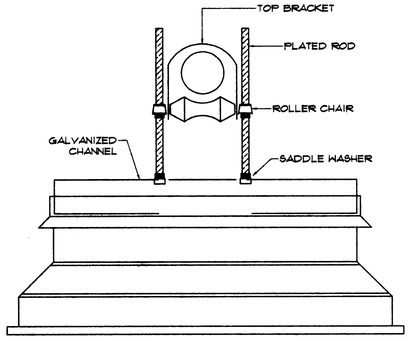

MODEL TEMS WITH PIPE ROLLER ASSEMBLY

2 ROOF MOUNTED PIPE SUPPRT DETAIL NO SCALE

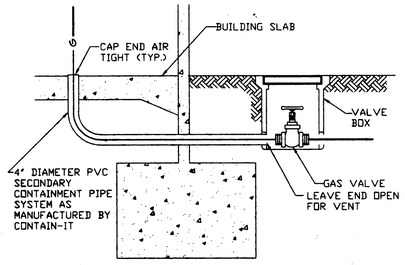

3 GAS ENTRY INTO BUILDING NO SCALE

HKA
Harlan Krusemark - Architect
4415 Cowell Road, Suite 230
Concord, CA 94521
Tel: 925.681.1905
Fax: 925.681.1906

LICENSED ARCHITECT HARLAN KRUSEMARK No. C23833 Exp. 9/30/01 STATE OF CALIFORNIA

HM MECHANICAL GROUP
2220 LIVINGSTON ST
SUITE 200
OAKLAND, CA
94606
510-261-5000 TEL
510-261-5003 FAX
HM5000@AOL.COM

REGISTERED PROFESSIONAL ENGINEER No. M20245 Exp. 6/30 STATE OF CALIFORNIA

Revisions	Date
△	
△	
△	
△	
△	
△	

HAWKINS SCHOOL
(INCREMENTS #1 & #2)

475 Darlene Lane
Tracy, CA 95377

Jefferson School District
7500 West Linne Road
Tracy, CA 95304

DSA FILE NO. 39-39
IDENTIFICATION STAMP
DIVISION OF THE STATE ARCHITECT
APPL 02 -102225
AC ___ FLS N/A SS N/A
DATE AUG 2 4 2000

Sheet Title:
PLUMBING DETAILS

Printing Date / Purpose:
08/18/00 DSA APPROVAL

Scale: NONE
Project Number: 9903.00
Sheet Number:

P3.2

of Sheets

FILE:

COPYRIGHT © 2000 HARLAN KRUSEMARK - ARCHITECT (HKA) THESE DRAWINGS ARE PROPRIETARY DOCUMENTS OF HKA AND ARE NOT TO BE DISTRIBUTED, PUBLISHED OR REPRODUCED WITHOUT WRITTEN PERMISSION OF HKA.

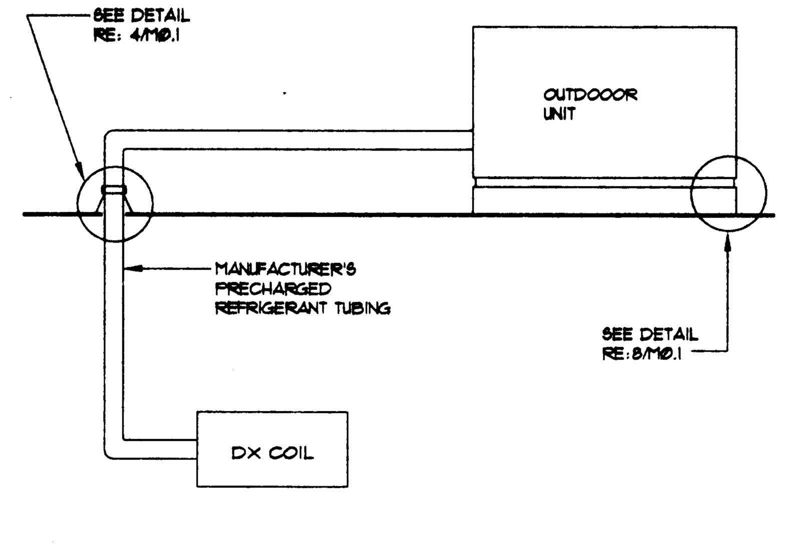

9 REFRIGERANT PIPING - ROOF MOUNTED UNIT
NTS
RE:

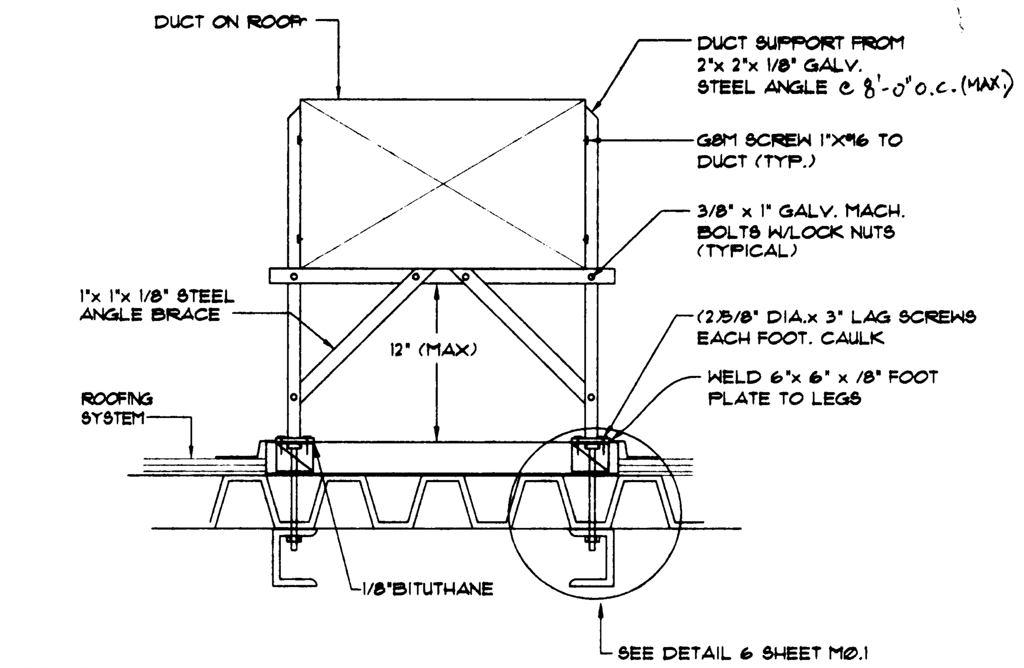

5 ROOF DUCT SUPPORT
N.T.S.
RE: H2.1,H2.2,H2.3,H2.4,H3.2.1

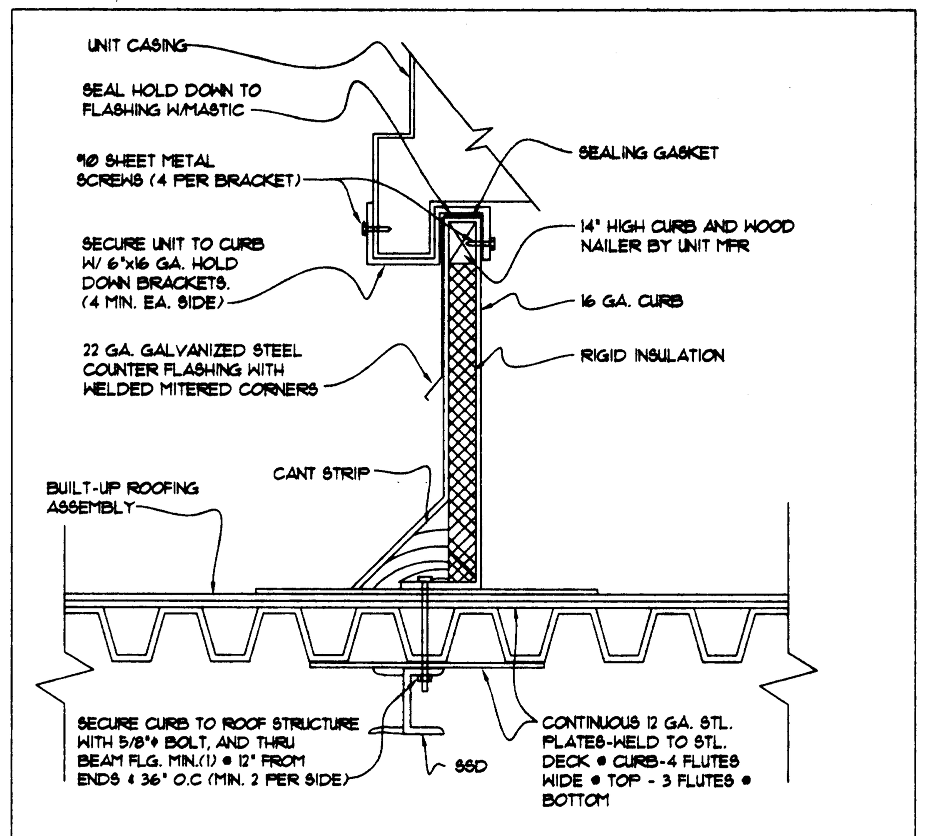

1 ROOFTOP UNIT MOUNTING
NTS

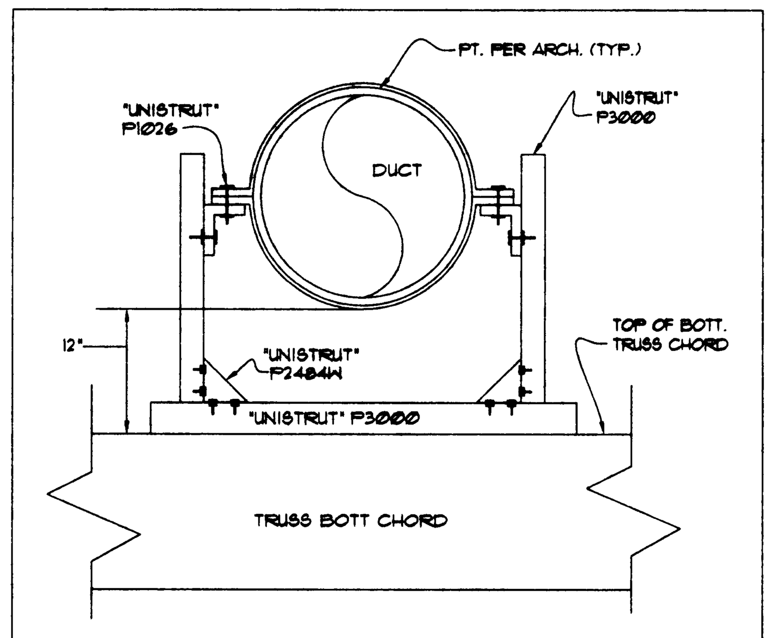

10 DUCT HANGER SUPPORT
FOR MULTI PURPOSE BLDG.
RE: H2.4

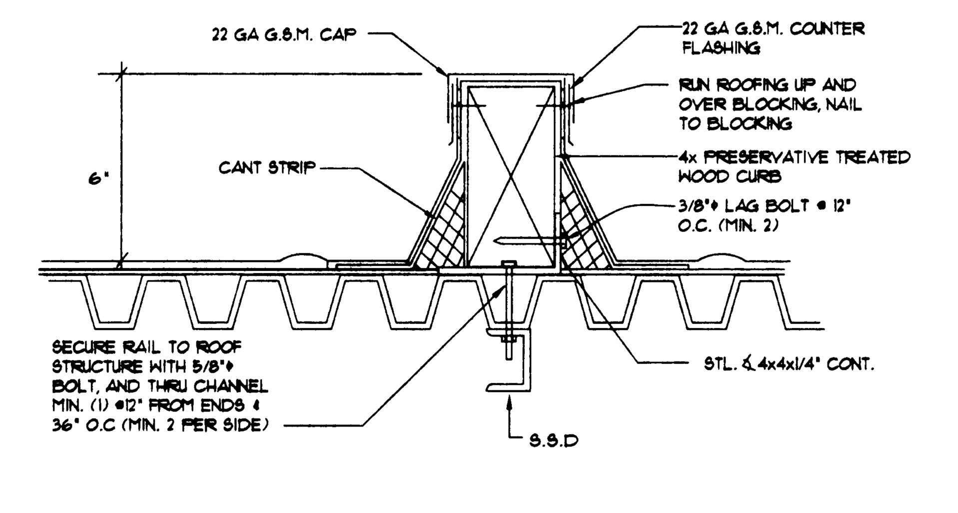

6 ROOF SLEEP
NTS
RE: H2.3, H2.4

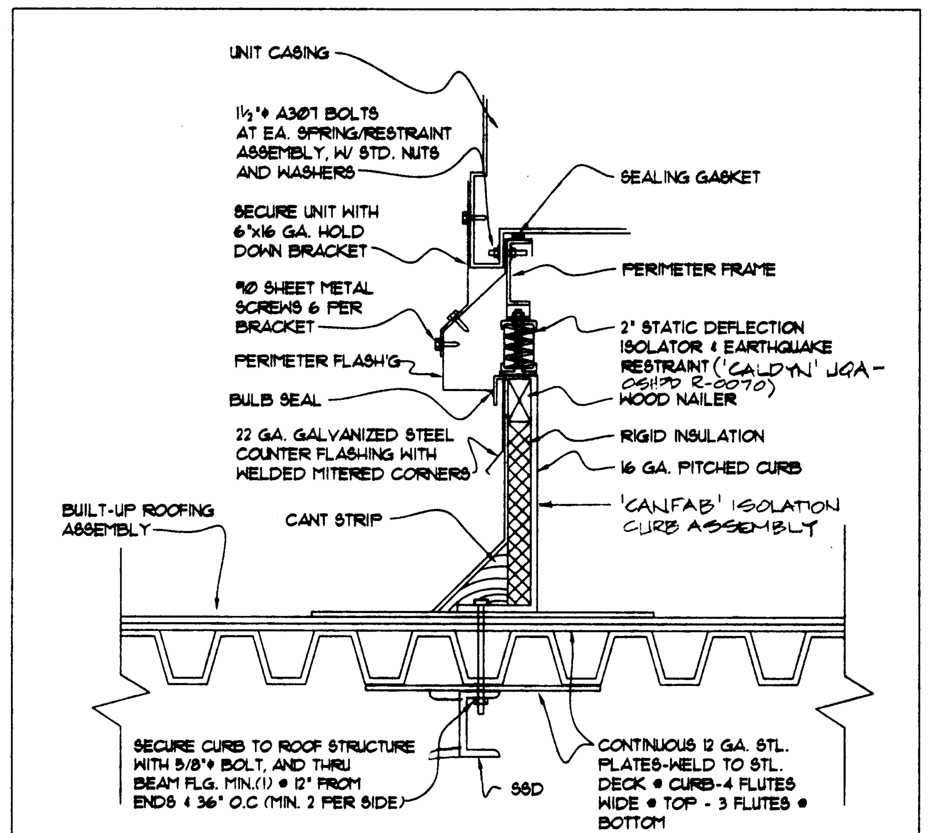

2 ROOFTOP UNIT MOUNTING
NTS
AC-1, 2 (MULTIUSE BLDG)

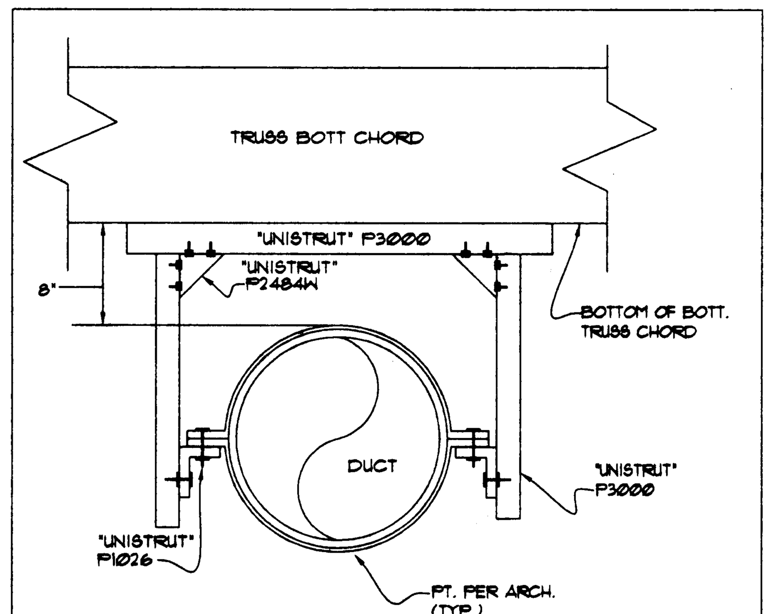

11 DUCT HANGER SUPPORT
FOR LIBRARY BLDG.

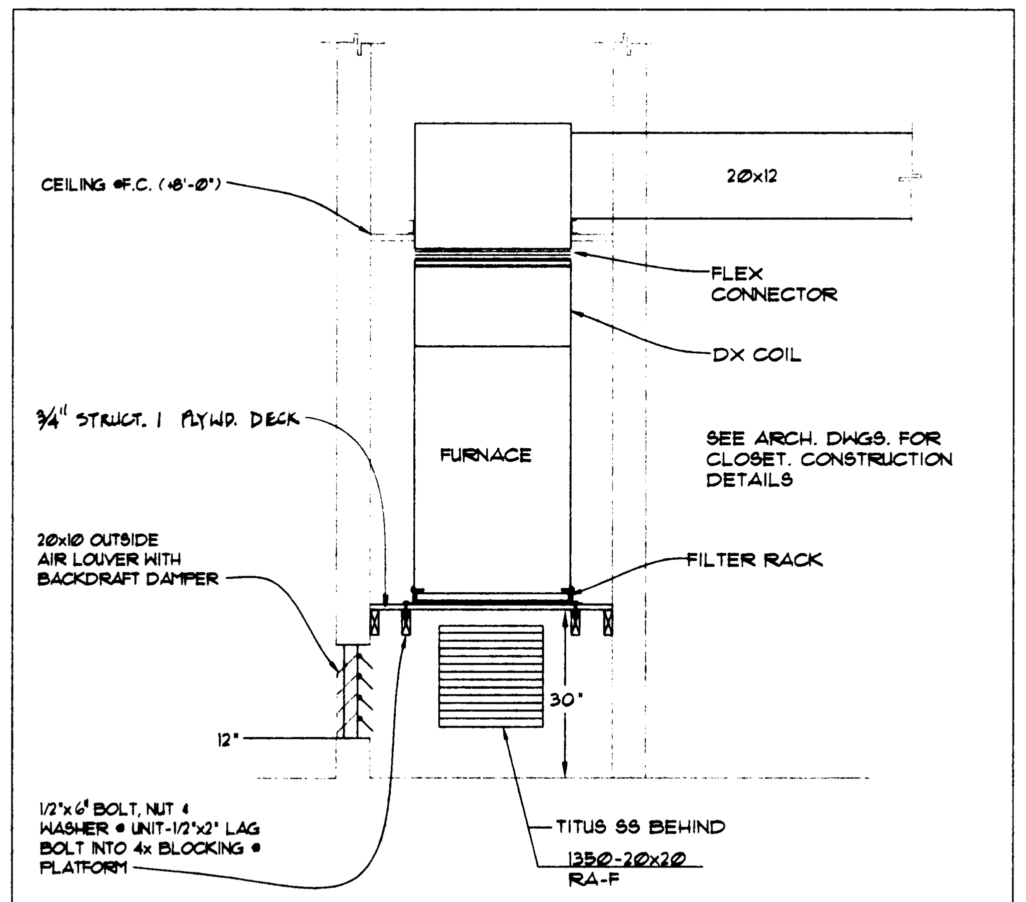

7 VERTICAL FURNACE INSTALLATOIN DETAIL
FOR FU-1, 2
RE: H2.2

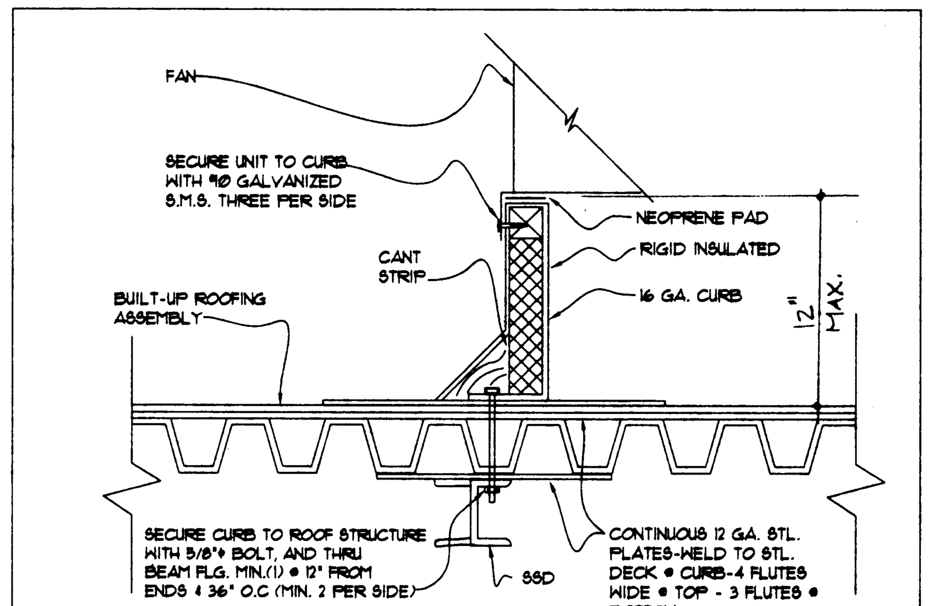

3 FAN MOUNTING
NTS

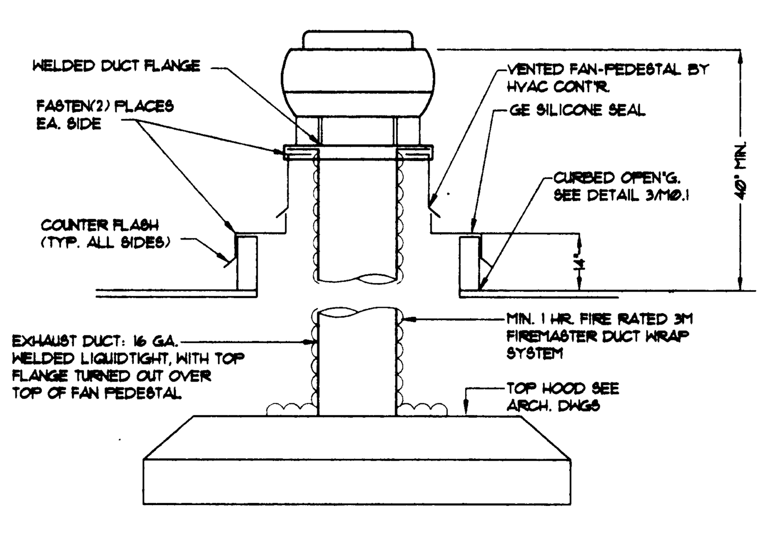

12 ROOF GREASE HOOD EXHAUST FAN

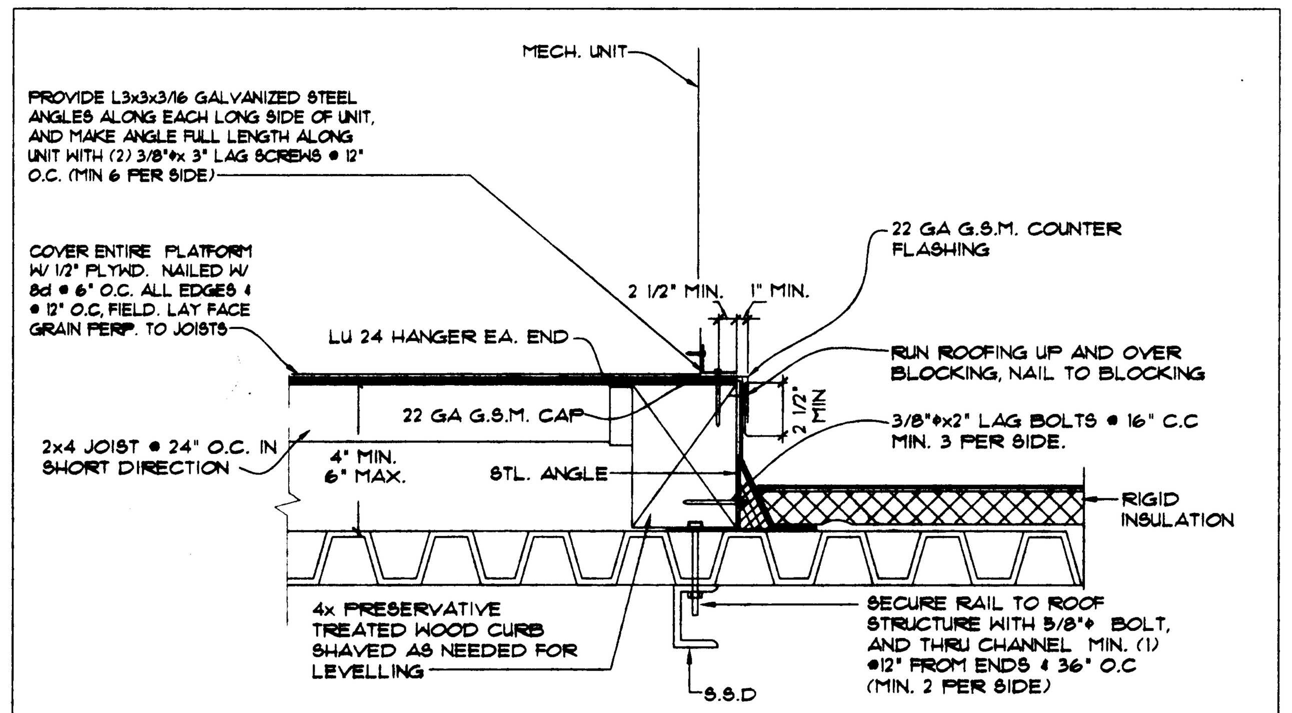

8 UNIT ANCHORAGE
RE:

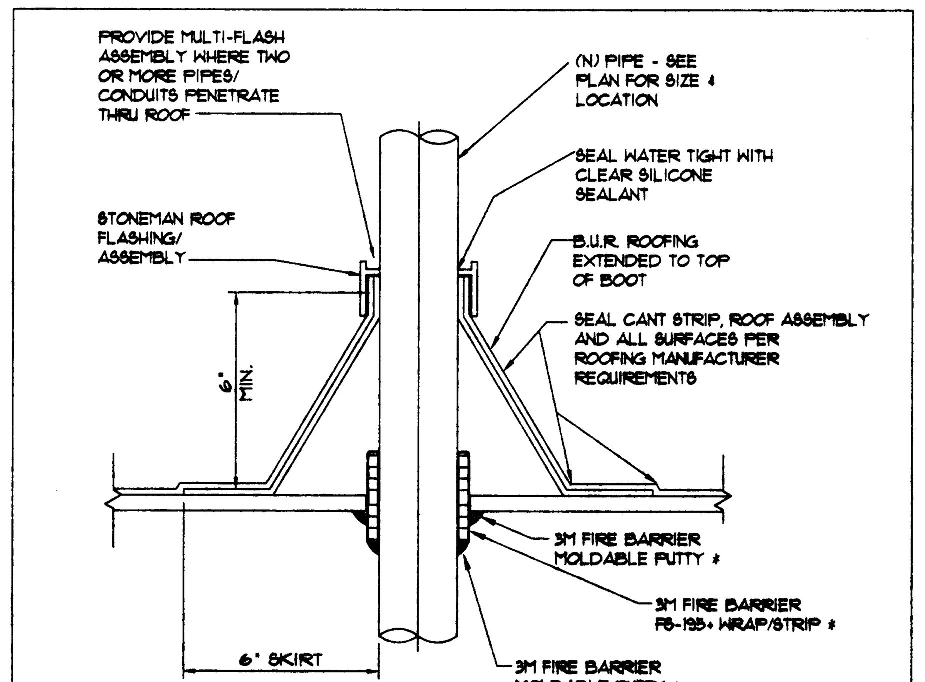

4 PIPE THRU ROOF
N.T.S.
RE:

NOTE: * UL DESIGN NO. FC8012

MECHANICAL LEGEND

SYMBOL	DESCRIPTION	SYMBOL	DESCRIPTION
[symbol]	MANUAL VOLUME DAMPER	FLA	FULL LOAD AMPS
[symbol]	CEILING DIFFUSER	HP	HORSEPOWER
		(M)	MOTOR
[symbol]	CEILING REGISTER	MD	MOTORIZED DAMPER
		M.S.	MOTOR STARTER
⊗	ROUND DIFFUSER	MVD	MANUAL VOLUME DAMPER
[symbol]	ROUND DUCT THROUGH ROOF	OA	OUTSIDE AIR
[symbol]	POINT OF CONNECTION	RA	RETURN AIR
AFF	ABOVE FINISHED FLOOR	RL	REFRIGERANT LIQUID
BDD	BACKDRAFT DAMPER	RS	REFRIGERANT SUCTION
(B)	BYPASS TIMER	S.S.D	SEE STRUCTURAL DRAWING
(C)	CONTROLLER	SA	SUPPLY AIR
BOD	BOTTOM OF DUCT	S.A.D.	SEE ARCHITECTURAL DWG
CFM	CUBIC FEET PER MINUTE	SEER	SEASONAL ENERGY EFF. RATIO
⌀	DIAMETER	—(S)	DUCT SMOKE DETECTOR
DN	DOWN	(T)(S)	THERMOSTAT, SENSOR @ 48" AFF
EA	EXHAUST AIR	TYP.	TYPICAL
EER	ENERGY EFFICIENCY RATIO	U.O.N	UNLESS OTHERWISE NOTED
EXH	EXHAUST	WT.	WEIGHT
—◁	COMB. FIRE / SMOKE DAMPER	24x12	RECTANGULAR DUCT - INCHES
DS	DISCONNECT SWITCH	12"⌀	ROUND DUCT - INCHES

DIFFUSER, REGISTER AND GRILLE SCHEDULE

TYPE	A	B	C	D	E	F
MODEL NO.	TITUS PAS	TITUS PAR	TITUS 300RS	TITUS 350ZR	TITUS PAS	TITUS PAR
FACE TYPE	PR	PR	HS	HS	PR	PR
MOUNTING	TB	TB	FL	FL	FL	FL
PATTERN	4W	--	ADJ	--	4W	--
DAMPER	OB	OB	OB	OB	OB	OB
MATERIAL	ST	ST	ST	ST	ST	AL
FINISH	WE	WE	WE	WE	WE	WE

FACE TYPE:
HS - HORIZ. STRAIGHT BLADES
PR - PERFORATED

MOUNTING:
FL - FLUSH
TB - LAY-IN

PATTERNS:
ADJ - ADJUSTABLE
4W - 4 WAY

FINISHES:
WE - WHITE ENAMEL

DAMPERS:
OB - OPPOSED BLADE

24x24 CEILING REGISTER (U.O.N)
24x12 CEILING REGISTER (U.O.N)

CEILING REGISTERS: 50 - 0824 / SA - A — CFM; NECK SIZE - INCHES; FACE SIZE - INCHES; SPEC. TYPE; APPLICATION

SIDEWALL REGISTERS: 50 - 8x4 / SA - A — CFM; NECK SIZE - INCHES; SPEC. TYPE; APPLICATION

GENERAL NOTES

SUBSTITUTION OF MATERIALS:

A. Equals: the design has been based on the manufacturer's name and product listed on the drawings. Other manufacturer's names listed in the specifications may be selected and considered "as equal" for quality only, however, they must match the performance, construction, fit and features of those selected for design. The acceptance of these does not relieve the Contractor of responsibility for providing the required materials and providing a workable system

B. Should the contractor wish to substitute equipment or material other than those considered for the basis of design, the contractor shall submit information as called for in the "Request for Substitutions" specifications, and submit required information for both the specified or scheduled item and the proposed substitute item. These submittals must show that both the specified and the substitute material match in quality, performance, construction, fit and features of those selected for design. Any equipment or material submitted for substitution without the comparison information will not be reviewed or acceptable.

C. Liability of Substitutions:

1. Performance of substitutions must be equal to the item specified. Should the substituted item fail to perform according to specifications, replace with the orginally specified item without extra compensation on request of the Architect any time within the quarantee period.
2. The Contractor is responsible for the cost of any changes to other trades and additonal Architectural and Consulting fees.

Where anchorage details are not shown on the drawings, the field installation shall be subject to the approval of the structural engineer, and the field representative of the Division of the State Architect.

Refer to SMACNA guidelines for duct/pipe support requirements.

Conduits shall be supported and braced per OSHPD anchorage pre-approval No. R-0010 the SMACNA "Guidelines for Seismic Restraints of Mechanical Systems and Plumbing Piping Systems" or No. R-0003 the "Superstrut Seismic Restraint System" for pipes and conduits only or No. R-0071 the "Kin-line Seismic Restraint System" for pipes and conduits only.

HKA
Harlan Krusemark - Architect
4415 Cowell Road, Suite 230
Concord, CA 94521
Tel: 925.681.1905
Fax: 925.681.1906

LICENSED ARCHITECT HARLAN KRUSEMARK No. C23833 Exp. 9/30/01 STATE OF CALIFORNIA

H&M MECHANICAL GROUP
2220 LIVINGSTON ST SUITE 200 OAKLAND, CA 94606
510-261-5000 TEL
510-261-5003 FAX
HM5000@AOL.COM

REGISTERED PROFESSIONAL ENGINEER No. M20246 Exp. 9/00 MECHANICAL STATE OF CALIFORNIA

Revisions | Date

HAWKINS SCHOOL
(INCREMENT #2)

475 Darlene Lane
Tracy, CA 95377

Jefferson School District
7500 West Linne Road
Tracy, CA 95304

DSA FILE NO. 39-39
IDENTIFICATION STAMP
DIVISION OF THE STATE ARCHITECT
APPL 02 -102225
AC ___ FLS RPA SS CCC
DATE AUG 2 4 2000

Sheet Title:
LEGENDS, SCHEDULES, AND DETAILS

Printing Date / Purpose:
- 08/18/00 DSA APPROVAL

Scale: NONE
Project Number: 9903.00
Sheet Number:

M0.1

of Sheets

FILE:

COPYRIGHT © 2000 HARLAN KRUSEMARK ARCHITECT (HKA) THESE DRAWINGS ARE PROPRIETARY DOCUMENTS OF HKA AND ARE NOT TO BE DISTRIBUTED, PUBLISHED OR REPRODUCED WITHOUT WRITTEN PERMISSION OF HKA.

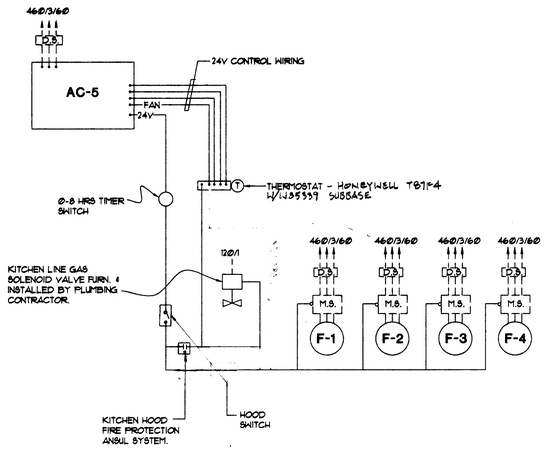

1 KITCHEN VENTILATION CONTROL DIAGRAMS
AC-3, F-1, 2, 3, 4
RE: M2.3

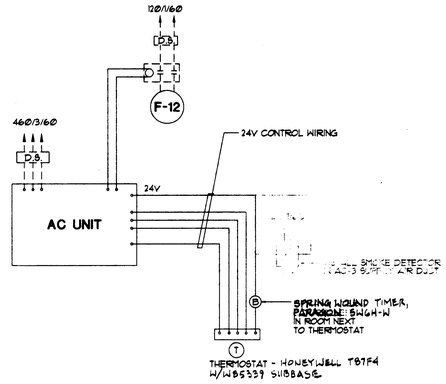

2 ROOFTOP PACKAGE UNIT
NTS
RE: MULTI-PURPOSE (M2.4: AC-3, F-12)

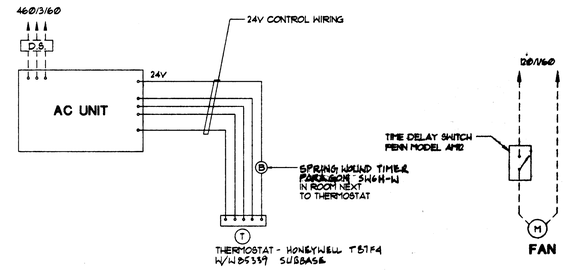

3 ROOFTOP PACKAGE UNIT
RE: LIBRARY (M2.3: AC-2, 3), MULTI-PURPOSE (M2.4: AC-1, 2, 3)

9 EXHAUST FAN CONTROL DIAGRAM
ADMIN (M2.1: F-1, 2, 3), MULTI-PURPOSE (M2.4: F-3, 6, 7)
KINDERGARTEN (M2.2: F-1, 2)

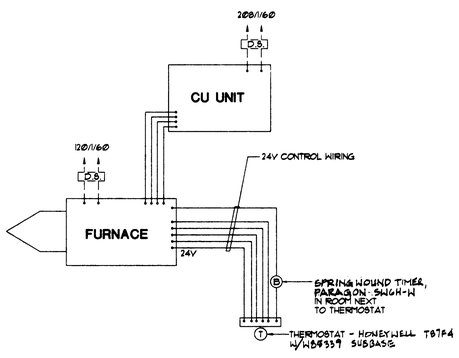

4 FURNACE CONTROL DIAGRAMS
ADMIN BLDG. (M2.1)
RE: FU-1 thru FU-4, CU-1 thru CU-4

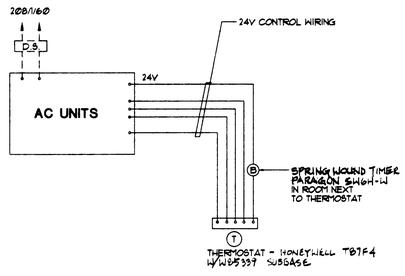

5 ROOFTOP PACKAGE UNIT
ADMIN BLDG (M2.1: AC-1, 2), LIBRARY (M2.2: AC-1)

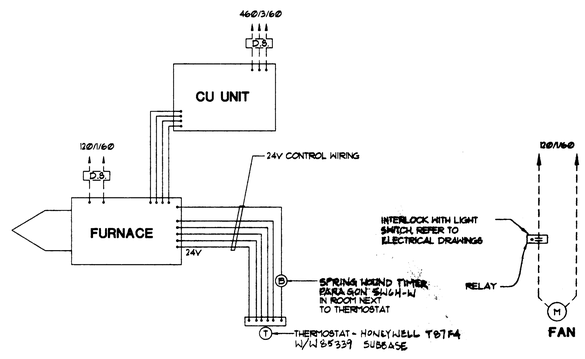

6 FURNACE CONTROL DIAGRAMS
KINDGARTEN BLDG. (M2.4)
RE: FU-1, 2 AND CU-1, 2

10 TOILET ROOM EXHAUST FAN CONTROL DIAGRAM
BUILDINGS 'B', 'D', & 'G'

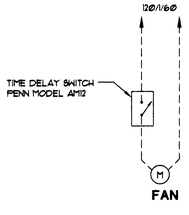

7 EXHAUST FAN CONTROL DIAGRAM
ADMIN (M2.1: F-1, 2, 3), MULTI-PURPOSE (M2.4: F-3, 6, 7)
KINDERSARTEN (M2.2: F-1, 2)

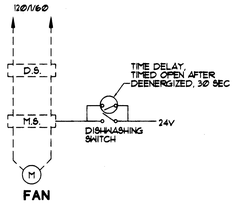

8 SCULLERY EXHAUST FAN CONTROL DIAGRAM
MULTI-PURPOSE (M2.4: F-13)

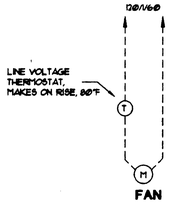

11 TRANSFORMER ROOM EXHAUST FAN CONTROL DIAGRAM
BUILDINGS 'B', 'D', & 'G'

NOTES:

1. ALL WIRING & EQUIPMENT SHOWN DASHED SHALL BE FURNISHED AND INSTALLED BY THE ELECTRICAL CONTRACTOR.
2. ALL LOW VOLTAGE WIRING SHALL BE FURNISHED AND INSTALLED BY THE MECHANICAL CONTRACTOR. ALL CONDUIT SHALL BE FURNISHED AND INSTALLED BY THE ELECTRICAL CONTRACTOR.
3. CONTROL DRAWINGS ARE DIAGRAMMATIC INDICATING CONTROL INTENT. CONTRACTOR SHALL SUBMIT CONTROL DRAWINGS FOR COORDINATION WITH OTHER TRADES.

HKA
Harlan Krusemark - Architect
4415 Cowell Road, Suite 230
Concord, CA 94521
Tel: 925.681.1905
Fax: 925.681.1906

LICENSED ARCHITECT
HARLAN KRUSEMARK
No. C23833
Exp. 9/30/01
STATE OF CALIFORNIA

HM MECHANICAL GROUP
2220 LIVINGSTON ST
SUITE 200
OAKLAND, CA
94606
510-281-8909 TEL
510-281-8002 FAX
HM8000@AOL.COM

REGISTERED PROFESSIONAL ENGINEER
No. M20245
Exp. 9/00
MECHANICAL
STATE OF CALIFORNIA

Revisions | Date

HAWKINS SCHOOL
(INCREMENT #2)

475 Darlene Lane
Tracy, CA 95377

Jefferson School District
7500 West Linne Road
Tracy, CA 95304

DSA FILE NO. 39-39
IDENTIFICATION STAMP
DIVISION OF THE STATE ARCHITECT
APPL 02 -102225
AC: FLS
DATE AUG 2 4 2000

Sheet Title:
CONTROL DIAGRAMS

Printing Date / Purpose:
- 08/18/00 DSA APPROVAL

Scale: NONE
Project Number: 9939.00
Sheet Number:

M0.2

of Sheets

FILE:

COPYRIGHT © 2000 HARLAN KRUSEMARK - ARCHITECT (HKA) THESE DRAWINGS ARE PROPRIETARY DOCUMENTS OF HKA AND ARE NOT TO BE DISTRIBUTED, PUBLISHED OR REPRODUCED WITHOUT WRITTEN PERMISSION OF HKA.

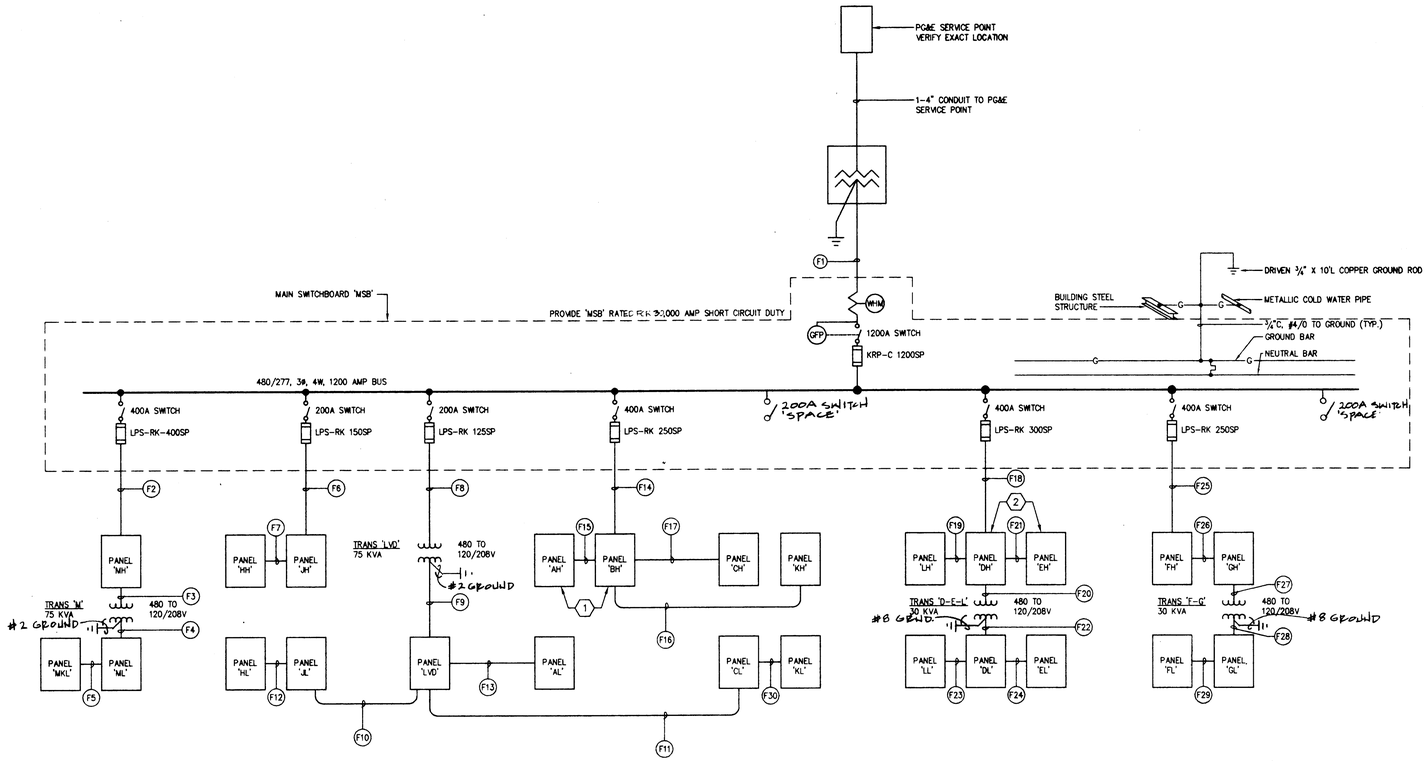

SINGLE LINE DIAGRAM

NOT TO SCALE

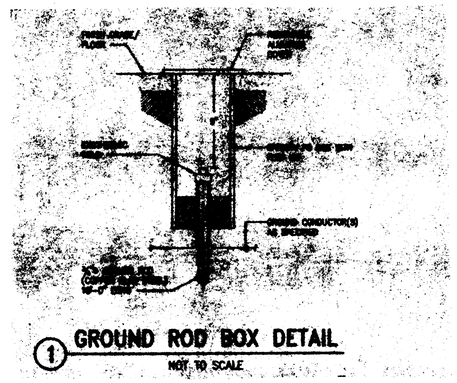

1 GROUND ROD BOX DETAIL

NOT TO SCALE

SHEET NOTES

1. PROVIDE PANELBOARD RATED FOR 22,000 AMP SHORT CIRCUIT RATING.
2. PROVIDE PANELBOARD RATED FOR 14,000 AMP SHORT CIRCUIT RATING.

FEEDER SCHEDULE

FEEDER DESTINATION	CONDUIT AND WIRE SIZE	FROM	TO
F1	3 - 5" W1	PG&E TRANSFORMER	MSB
F2	3½"C - 4ø500KCM & 1ø2G	MSB	PANEL "MH"
F3	1 1/2"C - 3ø2 & 1ø6G	PANEL "MH"	TRANSFORMER "M"
F4	3"C - 4ø300KCM & 1ø2G	TRANSFORMER "M"	PANEL "ML"
F5	2½"C - 4ø3/0 & 1ø6G	PANEL "ML"	PANEL "MKL"
F6	2"C - 4ø1/0 & 1ø6G	MSB	PANEL "JH"
F7	1 1/2"C - 4ø2 & 1ø8G	PANEL "JH"	PANEL "HH"
F8	1 1/2"C - 3ø1 & 1ø8G	MSB	TRANSFORMER "LVD"
F9	3"C - 4ø300 KCM & 1ø2G	TRANSFORMER "LVD"	PANEL "LVD"
F10	1 1/4"C - 4ø4 & 1ø10G	PANEL "LVD"	PANEL "JL"
F11	1 1/4"C - 4ø6 & 1ø10G	PANEL "LVD"	PANEL "CL"
F12	1 1/4"C - 4ø6 & 1ø10G	PANEL "JL"	PANEL "HL"
F13	1 1/2"C - 4ø2 & 1ø8G	PANEL "LVD"	PANEL "AL"
F14	3"C - 4ø250 KCM & 1ø4G	MSB	PANEL "BH"
F15	1 1/2"C - 4ø2 & 1ø8G	PANEL "BH"	PANEL "AH"
F16	1 1/2"C - 4ø2 & 1ø8G	PANEL "BH"	PANEL "KH"
F17	1 1/2"C - 4ø2 & 1ø8G	PANEL "BH"	PANEL "CH"
F18	3"C - 4ø350 KCM & 1ø4G	MSB	PANEL "DH"
F19	1 1/2"C - 4ø2 & 1ø8G	PANEL "DH"	PANEL "LH"
F20	1"C - 3ø6 & 1 ø8G	PANEL "DH"	TRANSFORMER "D-E-L"
F21	1 1/2"C - 4ø2 & 1ø8G	PANEL "DH"	PANEL "EH"
F22	1 1/2"C - 4ø2 & 1ø8G	TRANSFORMER "D-E-L"	PANEL "DL"
F23	1 1/4"C - 4ø6 & 1ø10G	PANEL "DL"	PANEL "LL"
F24	1 1/4"C - 4ø6 & 1ø10G	PANEL "DL"	PANEL "EL"
F25	3"C - 4ø350 KCM & 1ø4G	MSB	PANEL "FH"
F26	2"C - 4ø1/0 & 1ø6G	PANEL "FH"	PANEL "GH"
F27	1"C - 3ø6 & 1ø8G	PANEL "GH"	TRANSFORMER "F-G"
F28	1 1/2"C - 4ø2 & 1ø8G	TRANSFORMER "F-G"	PANEL "GL"
F29	1 1/4"C - 4ø6 & 1ø10G	PANEL "GL"	PANEL "FL"
F30	1 1/4"C - 4ø4 & 1ø10G	PANEL "GL"	PANEL "KL"

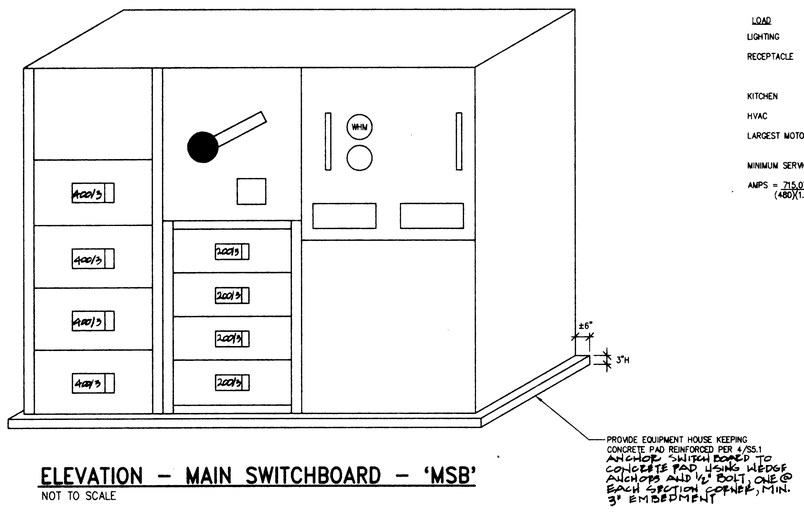

ELEVATION – MAIN SWITCHBOARD – 'MSB'

NOT TO SCALE

LOAD CALCULATIONS

LOAD	CONNECTED LOAD (VA)	DEMAND FACTOR	DEMAND LOAD
LIGHTING	156,455	1.0	156,455
RECEPTACLE	10,000	1.0	10,000
	126,360	0.5	63,180
KITCHEN	57,840	0.65	37,596
HVAC	449,060	1.0	449,060
LARGEST MOTOR	11,154	0.25	2,788
			719,079

MINIMUM SERVICE SIZE @ 480 VOLT, 3 PHASE

$$AMPS = \frac{715,079}{(480)(1.732)} = 864.92 \text{ AMPS}$$

COPYRIGHT © 2000 HARLAN KRUSEMARK - ARCHITECT (HKA) THESE DRAWINGS ARE PROPRIETARY DOCUMENTS OF HKA AND ARE NOT TO BE DISTRIBUTED, PUBLISHED OR REPRODUCED WITHOUT WRITTEN PERMISSION OF HKA.

HKA
Harlan Krusemark - Architect
4415 Cowell Road, Suite 230
Concord, CA 94521
Tel: 925.681.1905
Fax: 925.681.1906

WHM INCORPORATED
Engineering Consultants
1605 School Street
Moraga, CA 94556
Tel (925)376-2902 • Fax (925)376-2904
99104

Revisions Date

HAWKINS SCHOOL

Darlene Lane
Tracy, CA 95376

Jefferson School District
7500 West Linne Road
Tracy, CA 95376

DSA FILE NO. 39-39
IDENTIFICATION STAMP
DIVISION OF THE STATE ARCHITECT
APPL.02 -102225
AC. RLS DATE AUG 2 4 2000

Sheet Title:
ELECTRICAL ONE
LINE SERVICE DIAGRAM

Printing Date / Purpose:
4/21/00 DSA REVIEW
8/18/00 DSA APPROVAL

Scale: AS NOTED
Project Number: 9903.00
Sheet Number:

E0.1

of Sheets

FILE 99104E01.dwg

3:16 pm 03/17/00
08/21/00 7:48:17 AM \\SERVER\CADD\1999\9910A\9910HE01.DWG

ELECTRICAL PANEL SCHEDULES

PANEL 'CH' ⟨1⟩

SERVICE	LTG.	REC.	RES.	MOT.	CB	S/N	S/N	CB	LTG.	REC.	RES.	MOT.	SERVICE
LTG. – CLASSROOM 1A					20/1	1	2						HVAC – CLASSROOM 1A
LTG. – CLASSROOM 1B						3	4						
LTG. – CLASSROOM 1C						5	6	3					
LTG. – CLASSROOM 1D						7	8						HVAC – CLASSROOM 1B
SPARE						9	10						
						11	12	3					
						13	14						HVAC – CLASSROOM 1C
						15	16						
						17	18	3					
						19	20						HVAC – CLASSROOM 1D
						21	22						
						23	24	3					
SPACE						25	26						SPACE
						27	28						
						29	30						
						31	32						
						33	34						
						35	36						
PANEL KH						37	38						
						39	40						
					3	41	42						
TOTALS													TOTALS

100A 3P

VOLTS: 480/277V,3ø,4W MTG: SURFACE NEMA 3R
TYPE: NF SOURCE: 1½"C – 4#2, #8G
MAINS: 125 AMP

NOTE: POWDER COAT PAINT PANEL BOARD COVER COLOR AS DIRECTED BY ARCHITECT

TOTAL ___KVA

PANEL 'DL' ⟨1⟩

SERVICE	LTG.	REC.	RES.	MOT.	CB			CB	LTG.	REC.	RES.	MOT.	SERVICE
RECEPT. – CLASSROOM 3A					20/1	1	2	20/1					RECEPT. – CLASSROOM 2A
						3	4						
						5	6						
						7	8						
						9	10						
						11	12						
RECEPT. – CLASSROOM 3B						13	14						RECEPT. – CLASSROOM 2B
						15	16						
						17	18						
						19	20						
						21	22						
						23	24						
RECEPT. – CLASSROOM 2D						25	26						RECEPT. – CLASSROOM 2C
						27	28						
						29	30						
						31	32						
						33	34						
						35	36						
RECEPT. – PE OFF.,STOR.,TOILET						37	38						SPARE
SPARE						39	40						
EXHAUST						41	42						
TOTALS													TOTALS

(N) 110A 3P

TO PANEL 'EL' 60A 3P
TO PANEL 'LL' 60A 3P

VOLTS: 120/208V,3ø,4W MTG: SURFACE
TYPE: NQOD SOURCE: 1½"C – 4#2, 1#6G
MAINS: 225 AMP

TOTAL ___KVA

PANEL 'FH' ⟨1⟩

SERVICE	LTG.	REC.	RES.	MOT.	CB	S/N	S/N	CB	LTG.	REC.	RES.	MOT.	SERVICE
LTG. – CLASSROOM 8A					20/1	1	2						HVAC – CLASSROOM 8A
LTG. – CLASSROOM 8B						3	4						
LTG. – CLASSROOM 8C						5	6	3					
LTG. – SCIENCE						7	8						HVAC – CLASSROOM 8B
SPARE						9	10						
						11	12	3					
						13	14						HVAC – CLASSROOM 8C
						15	16						
						17	18	3					
PANEL 'GH'					150	19	20						HVAC – SCIENCE CLASSROOM
						21	22						
					3	23	24	3					
SPACE						25	26						SPACE
						27	28						
						29	30						
						31	32						
						33	34						
						35	36						
						37	38						
						39	40						
						41	42						
TOTALS													TOTALS

250A 3P

VOLTS: 480/277V,3ø,4W MTG: SURFACE NEMA 3R
TYPE: NF SOURCE: 3"C – 4#350KCM, 1#4G
MAINS: 400 AMP

TOTAL ___KVA

PANEL 'CL' ⟨1⟩

SERVICE	LTG.	REC.	RES.	MOT.	CB	S/N	S/N	CB	LTG.	REC.	RES.	MOT.	SERVICE
RECEPT. – CLASSROOM 1A					20/1	1	2	20/1					RECEPT. – CLASSROOM 1B
						3	4						
						5	6						
						7	8						
						9	10						
						11	12						
RECEPT. – CLASSROOM 1C						13	14						RECEPT. – CLASSROOM 1D
						15	16						
						17	18						
						19	20						
						21	22						
						23	24						
RPC-C		1.0				25	26						SPACE
SPACE						27	28						
						29	30						
						31	32						
						33	34						
						35	36						
PANEL KL					60	37	38						
						39	40						
					3	41	42						
TOTALS		1.0											TOTALS

60A 3P

VOLTS: 120/208V,3ø,4W MTG: SURFACE NEMA 3R
TYPE: NQOD SOURCE: 1¼"C – 4#6 AND 1#10G
MAINS: 100 AMP

NOTE: POWDER COAT PAINT PANEL BOARD COVER COLOR AS DIRECTED BY ARCHITECT

TOTAL 1.0 KVA

PANEL 'EH' ⟨1⟩

SERVICE	LTG.	REC.	RES.	MOT.	CB	S/N	S/N	CB	LTG.	REC.	RES.	MOT.	SERVICE
LTG. – CLASSROOM 7A					20/1	1	2						HVAC – CLASSROOM 7A
LTG. – CLASSROOM 7B						3	4						
LTG. – CLASSROOM 7C						5	6	3					
LTG. – COMPUTER CLASSROOM						7	8						HVAC – CLASSROOM 7B
SPARE						9	10						
						11	12	3					
						13	14						HVAC – CLASSROOM 7C
						15	16						
						17	18	3					
						19	20						HVAC – COMPUTER CLASSROOM
						21	22						
						23	24	3					
SPACE						25	26						SPACE
						27	28						
						29	30						
						31	32						
						33	34						
						35	36						
						37	38						
						39	40						
						41	42						
TOTALS													TOTALS

100A 3P

VOLTS: 480/277V,3ø,4W MTG: SURFACE NEMA 3R
TYPE: NF SOURCE: 1½"C – 4#2, 1#8G
MAINS: 125 AMP

NOTE: POWDER COAT PAINT PANEL BOARD COVER COLOR AS DIRECTED BY ARCHITECT

TOTAL ___KVA

PANEL 'FL' ⟨1⟩

SERVICE	LTG.	REC.	RES.	MOT.	CB	S/N	S/N	CB	LTG.	REC.	RES.	MOT.	SERVICE
RECEPT. – CLASSROOM 8A					20/1	1	2	20/1					RECEPT. – CLASSROOM 8B
						3	4						
						5	6						
						7	8						
						9	10						
						11	12						
RECEPT. – CLASSROOM 8C						13	14						RECEPT. – SCIENCE CLASSROOM
						15	16						
						17	18						
						19	20						
						21	22						
						23	24						
IRRIGATION CONTROLLER		0.5				25	26						SPARE
SPACE						27	28						
						29	30						
						31	32						
						33	34						
						35	36						
						37	38						
						39	40						
						41	42						
TOTALS		0.5											TOTALS

60A 3P

VOLTS: 120/208V,3ø,4W MTG: SURFACE NEMA 3R
TYPE: NQOD SOURCE: 1¼"C – 4#6, 1#10G
MAINS: 100 AMP

TOTAL 0.5 KVA

PANEL 'DH' ⟨1⟩

SERVICE	LTG.	REC.	RES.	MOT.	CB	S/N	S/N	CB	LTG.	REC.	RES.	MOT.	SERVICE
LTG. – CLASSROOM 3A					20/1	1	2						HVAC – CLASSROOM 3A
LTG. – CLASSROOM 3B						3	4						
LTG. – CLASSROOM 2A						5	6	3					
LTG. – CLASSROOM 2B						7	8						HVAC – CLASSROOM 3B
LTG. – CLASSROOM 2C						9	10						
LTG. – CLASSROOM 2D						11	12	3					
SPARE						13	14						HVAC – CLASSROOM 2A
						15	16						
						17	18	3					
						19	20						HVAC – CLASSROOM 2B
SPACE						21	22						
						23	24	3					
						25	26						HVAC – CLASSROOM 2C
						27	28						
						29	30	3					
PANEL 'LH'					100	31	32						HVAC – CLASSROOM 2D
						33	34						
					3	35	36	3					
TRANSFORMER D & E & L					70	37	38	100					PANEL 'EH'
						39	40						
					3	41	42	3					
TOTALS													TOTALS

300A 3P

VOLTS: 480/277V,3ø,4W MTG: SURFACE
TYPE: NF SOURCE: 3"C – 4#350KCM, 1#4G
MAINS: 400 AMP

TOTAL ___KVA

PANEL 'EL' ⟨1⟩

SERVICE	LTG.	REC.	RES.	MOT.	CB	S/N	S/N	CB	LTG.	REC.	RES.	MOT.	SERVICE
RECEPT. – CLASSROOM 7A					20/1	1	2	20/1					RECEPT. – CLASSROOM 7B
						3	4						
						5	6						
						7	8						
						9	10						
						11	12						
RECEPT. – CLASSROOM 7C						13	14						RECEPT. – COMPUTER CLASSRM
						15	16						
						17	18						
						19	20						
						21	22						
						23	24						
SPACE						25	26						SPACE
						27	28						
						29	30						
						31	32						
						33	34						
						35	36						
						37	38						
						39	40						
						41	42						
TOTALS													TOTALS

60A 3P

VOLTS: 120/208V,3ø,4W MTG: SURFACE NEMA 3R
TYPE: NQOD SOURCE: 1¼"C – 4#6, 1#10G
MAINS: 100 AMP

NOTE: POWDER COAT PAINT PANEL BOARD COVER COLOR AS DIRECTED BY ARCHITECT

TOTAL ___KVA

PANEL 'GH' ⟨1⟩

SERVICE	LTG.	REC.	RES.	MOT.	CB	S/N	S/N	CB	LTG.	REC.	RES.	MOT.	SERVICE
LTG. – CLASSROOM 6A					20/1	1	2						HVAC – CLASSROOM 6A
LTG. – CLASSROOM 6B						3	4						
LTG. – CLASSROOM 6C						5	6	3					
LTG. – SDC						7	8						HVAC – CLASSROOM 6B
LTG. – RSP						9	10						
SPARE						11	12	3					
						13	14						HVAC – CLASSROOM 6C
						15	16						
						17	18	3					
						19	20						HVAC – SDC
						21	22						
						23	24	3					
SPACE						25	26						HVAC – RSP
						27	28						
						29	30	3					
						31	32						SPACE
						33	34						
						35	36						
TRANSFORMER F & G					70	37	38						
						39	40						
					3	41	42						
TOTALS													TOTALS

150A 3P

VOLTS: 480/277V,3ø,4W MTG: SURFACE
TYPE: NF SOURCE: 2"C – 4#1/0, 1#6G
MAINS: 225 AMP

TOTAL ___KVA

SHEET NOTES

⟨1⟩ ELECTRICAL LOADS IN PANELS ON MODULAR BUILDINGS SHALL BE FILLED IN BY CONTRACTOR.

HKA
Harlan Krusemark - Architect
4415 Cowell Road, Suite 230
Concord, CA 94521
Tel: 925.681.1905
Fax: 925.681.1906

WHM INCORPORATED
Engineering Consultants
1605 School Street
Moraga, CA 94556
Tel (925)376-2902 • Fax (925)376-2904
99104

Revisions | Date

HAWKINS SCHOOL
Darlene Lane
Tracy, CA 95376

Jefferson School District
7500 West Linne Road
Tracy, CA 95376

DSA FILE NO. 39-39
IDENTIFICATION STAMP
DIVISION OF THE STATE ARCHITECT
APPL# 02-102225
AC ___ FLS ___ SS ___
DATE AUG 2 4 2000

Sheet Title:
ELECTRICAL
PANEL SCHEDULES

Printing Date / Purpose:
4/21/00 DSA REVIEW
8/18/00 DSA APPROVAL

Scale: NO SCALE
Project Number: 9903.00
Sheet Number:
E0.2
_ of _ Sheets

FILE 99104E02.dwg

09:43 am 08/18/00
08/20/00 8:50:56 PM \\SERVER\CAD\1999\99104\99104E02.DWG

COPYRIGHT © 2000 HARLAN KRUSEMARK - ARCHITECT (HKA) THESE DRAWINGS ARE PROPRIETARY DOCUMENTS OF HKA AND ARE NOT TO BE DISTRIBUTED, PUBLISHED OR REPRODUCED WITHOUT WRITTEN PERMISSION OF HKA.

PANEL 'GL' (1)

SERVICE	LTG.	REC.	RES.	MOT.	CB	CKT	CKT	CB	LTG.	REC.	RES.	MOT.	SERVICE
RECEPT. – CLASSROOM 6A					20/1	1	2	20/1					RECEPT. – SDC
						3	4						
						5	6						
						7	8						
						9	10						
						11	12						
RECEPT. – CLASSROOM 6B						13	14						RECEPT. – RSP
						15	16						
						17	18						
						19	20						
						21	22						
						23	24						
RECEPT. – CLASSROOM 6C						25	26						SPARE
						27	28						
						29	30						
						31	32						
						33	34						
						35	36						
RECEPT. – PE OFF.,STOR.,TOILET						37	38	60/3					PANEL 'FL'
SPARE						39	40						
EXHAUST						41	42						
TOTALS													TOTALS

110A 3P

VOLTS: 120/208V,3Ø,4W MTG: SURFACE
TYPE: NQOD SOURCE: 1½"C – 4#2, 1#6G
MAINS: 225 AMP TOTAL ___KVA

PANEL 'KH'

SERVICE	LTG.	REC.	RES.	MOT.	CB	CKT	CKT	CB	LTG.	REC.	RES.	MOT.	SERVICE
LTG. – CLASSROOM KA	3.2				20/1	1	2	15/3				2.6	CU-1 12.1MCA
LTG. – CLASSROOM KB	3.2					3	4					2.6	
LTG. – OFFICES	0.3					5	6					2.6	
LTG. – EXTERIOR	0.3					7	8	15/3				2.6	CU-2 12.1MCA
SPARE						9	10					2.6	
						11	12					2.6	
						13	14						SPACE
						15	16						
						17	18						
						19	20						
						21	22						
						23	24						
SPACE						25	26						
						27	28						
						29	30						
TOTALS	7.0												TOTALS

100A 3P

NOTE: POWDER COAT PAINT PANELBOARD COVER COLOR AS DIRECTED BY ARCHITECT.

VOLTS: 480/277V,3Ø,4W MTG: RECESSED
TYPE: NF SOURCE: 1½"C – 4#2, 1#6G
MAINS: 125 AMP TOTAL 7.0 KVA

PANEL 'KL'

SERVICE	LTG.	REC.	RES.	MOT.	CB	CKT	CKT	CB	LTG.	REC.	RES.	MOT.	SERVICE
RECEPT. – WORKROOM		1.0			20/1	1	2	20/1					RECEPT. – CLASSRM K02
– CLASSROOM K01		1.2				3	4						
		1.0				5	6						SPACE
SPARE						7	8						
						9	10						
						11	12						
						13	14						
						15	16						
						17	18	20/1				1.22	FU-1
IRRIGATION CONTROLLER		0.5				19	20					1.22	FU-2
TOTALS		3.7										2.44	TOTALS

60A 3P

NOTE: POWDER COAT PAINT PANELBOARD COVER COLOR AS DIRECTED BY ARCHITECT.

VOLTS: 120/208V,3Ø,4W MTG: RECESSED
TYPE: NQOD SOURCE: 1¼"C – 4#4, 1#10G
MAINS: 100 AMP TOTAL 6.14 KVA

SHEET NOTES

(1) ELECTRICAL LOADS IN PANELS ON MODULAR BUILDINGS SHALL BE FILLED IN BY CONTRACTOR.

PANEL 'MH' (SECTION 1)

SERVICE	LTG.	REC.	RES.	MOT.	CB	CKT	CKT	CB	LTG.	REC.	RES.	MOT.	SERVICE
LTG – KITCHEN	2.4				20/1	1	2	50/3				9.1	AC-2 34MCA (KITCHEN)
– PLATFORM/STORAGE	1.7					3	4					9.1	
– SWING/LOCKERS	1.6					5	6					9.1	
– MP HID	3.2					7	8	50/3				9.1	AC-1 34MCA (SWING ROOM)
– MP HID	3.2					9	10					9.1	
– MP EMERGENCY	0.3					11	12					9.1	
* – EXTERIOR	0.3					13	14	30/1				5.5	PTHP 19.6A
EXTERIOR, OUTDOOR PLATFORM	0.2					15	16	20/3				3.2	AC-4 11.9MCA (SWING ROOM)
SPARE						17	18					3.2	
						19	20					3.2	
						21	22	20/3				3.9	AC-3 14.7MCA (PLATFORM)
						23	24					3.9	
SPACE						25	26					3.9	
						27	28	20/3				3.9	AC-5 14.7MCA (KITCHEN)
						29	30					3.9	
						31	32					3.9	
						33	34						SPACE
						35	36						
						37	38						
						39	40						
						41	42						
TOTALS	12.9											93.1	TOTALS

400A 3P

VOLTS: 480/277V,3Φ,4W MTG: RECESSED
TYPE: NF SOURCE: 3½"C-4#500KCM & 1#2G
MAINS: 400AMP TOTAL 106.0 KVA
* LOCK-ON DEVICE REQUIRED

PANEL 'AH'

SERVICE	LTG.	REC.	RES.	MOT.	CB	CKT	CKT	CB	LTG.	REC.	RES.	MOT.	SERVICE
LTG – RECEPTION,NURSE,TOIL,V.PRINCP,STOR	2.3				20/1	1	2						SPACE
– GALLERY	1.2					3	4						
– LOUNGE,WK.RM,CONF,TOIL,STOR	2.2					5	6						
EXTERIOR LTG	0.3					7	8						
SPARE						9	10						
						11	12						
TOTALS													TOTALS

100A 3P

VOLTS: 480/277V,3Ø,4W MTG: RECESSED
TYPE: NF SOURCE: 1½"C – 4#2, 1#8G
MAINS: 125 AMP TOTAL ___KVA

PANEL 'AL'

SERVICE	LTG.	REC.	RES.	MOT.	CB	CKT	CKT	CB	LTG.	REC.	RES.	MOT.	SERVICE
RECEPT – STOR/WK,RECEPTION		1.2			20/1	1	2	15/1		0.2		0.94	FU-1 10.0MCA, ROOF MTD. RECEPT
– RECEPTION/WAITING		1.2				3	4					0.79	FU-2 8.4MCA
		1.2				5	6					0.94	FU-3 10.0MCA
– NURSE,TOIL,UC REF.		1.0				7	8			0.36		0.79	FU-4 8.4MCA, ROOF MTD. RECEPT
– V.PRINCP,WTG,ROOF		1.2				9	10	20/2				1.22	CU-1 14.4MCA
– PRINCIPAL		0.9				11	12					1.22	
– REFRIG		1.2				13	14	20/2				1.08	CU-2 12.8MCA
– DISPOSAL				1.2		15	16					1.08	
– DISHWASHER			1.5			17	18	20/2				1.22	CU-3 14.4MCA
– LOUNGE		1.0				19	20					1.22	
– WORK RM		1.0				21	22	20/2				1.08	CU-4 12.8MCA
– ,OFFC		0.8				23	24					1.08	
– LOUNGE,TOILS		0.8				25	26	20/2				1.45	AC-1 13.9MCA
– CONF,OFFC		0.8				27	28					1.45	
– CONF,OFFC		0.8				29	30	20/2				1.45	AC-2 13.9MCA
– UC REFRIG (NURSE),WTG		0.36		0.5		31	32					1.45	
RPS-A		1.0				33	34						SPACE
FIRE ALARM CONTROL PANEL		1.0				35	36						
INTRUSION ALARM CONTROL PANEL		0.5				37	38						
WH-1			1.5			39	40						
WH-2			1.5			41	42						
TOTALS		15.96	4.5	1.7						0.56			TOTALS

100A 3P

NOTE: POWDER COAT PAINT PANELBOARD COVER COLOR AS DIRECTED BY ARCHITECT.

VOLTS: 120/208V,3Ø,4W MTG: RECESSED
TYPE: NQOD SOURCE: 1½"C – 4#2, 1#8G
MAINS: 225 AMP TOTAL 22.72 KVA

PANEL 'LH'

SERVICE	LTG.	REC.	RES.	MOT.	CB	CKT	CKT	CB	LTG.	REC.	RES.	MOT.	SERVICE
LTG – WORK RM,STACKS	1.9				20/1	1	2	20/3				3.48	AC-2 (15.4MCA)
– STACKS	3.6					3	4					3.48	
– STACKS	3.6					5	6					3.48	
EXTERIOR LTG	0.2					7	8	20/3				3.48	AC-3 (15.4MCA)
SPARE						9	10					3.48	
						11	12					3.48	
SPACE						13	14						SPACE
						15	16						
						17	18						
						19	20						
TOTALS	9.3											20.88	TOTALS

100A 3P

NOTE: POWDER COAT PAINT PANELBOARD COVER COLOR AS DIRECTED BY ARCHITECT.

VOLTS: 480/277V,3Ø,4W MTG: RECESSED
TYPE: NF SOURCE: 1½"C – 4#2, 1#8G
MAINS: 125 AMP TOTAL 30.18 KVA

PANEL 'MH' (SECTION 2)

SERVICE	LTG.	REC.	RES.	MOT.	CB	CKT	CKT	CB	LTG.	REC.	RES.	MOT.	SERVICE
				0.3	20/3	43	44	20/3				0.3	
F1 (½ HP)				0.3		45	46					0.3	F3 (½ HP)
				0.3		47	48					0.3	
				0.3	20/3	49	50	20/3				0.3	
F2 (½ HP)				0.3		51	52					0.3	F4 (½ HP)
				0.3		53	54					0.3	
				1.7	20/3	55	56	20/3				1.0	
WALK-IN FREEZER				1.7		57	58					1.0	WALK-IN COOLER
				1.7		59	60					1.0	
SPACE						61	62						SPACE
						63	64						
						65	66						
						67	68						
						69	70						
						71	72						
						73	74						
						75	76						
						77	78						
						79	80	200/3			25		
						81	82				25		TRANSFORMER "M"
						83	84				25		
TOTALS				6.9								4.8	TOTALS

VOLTS: 480/277V,3Φ,4W MTG: RECESSED
TYPE: NF SOURCE: 3½"C-4#500KCM & 1#2G
MAINS: 400AMP

TOTAL 105.8 KVA SECTION 1
TOTAL 11.7 KVA SECTION 2
TOTAL 117.5 KVA

PANEL 'ML'

SERVICE	LTG.	REC.	RES.	MOT.	CB	CKT	CKT	CB	LTG.	REC.	RES.	MOT.	SERVICE
RECEPT – CASH REG		1.2			20/1	1	2	20/1		0.8		0.1	RECEPT – STOR,GYM,LOCKER,SWING,FAN
– COMMUN		0.8				3	4			1.0			– STOR,GYM
– REFRIG		1.0				5	6			0.6		0.1	– LOCKER,SWING,FAN
– KITCH,HALL,OFFC		0.8				7	8			1.0			– DRIS.,PLATFORM
– DISPOSAL				0.9		9	10			1.0			– PLATFORM
– HALL,OFFC,JAN,DRY GDS		1.2				11	12			1.0			– GYM,LOBBY,TABLE/CHAIR,STOR
– CASH REG		1.0				13	14		0.6				TRACK LTG – PLATFORM
– GYM,OUTSIDE		0.4				15	16		0.6				
– KITCHEN		1.0				17	18		0.6				
– KITCHEN		0.4				19	20		0.6				
LTG – WALK-IN REF.						21	22		0.8				QUARTZ – MP
– WALK-IN FREEZER						23	24		0.8				
SPARE						25	26		0.8				
						27	28		0.8				
						29	30			1.0			RECEPT – OUTDOOR PLATFORM
LIGHTING DIMMER "i"&"j"						31	32			1.0			– OUTDOOR PLATFORM
"k"&"l"						33	34					1.0	LIFT –
"m"&"n"						35	36					1.2	MOTORIZED SHADES
					20/3	37	38					2.3	
PANEL 'MLK'						39	40			1.0			SOUND SYSTEM,ASSISTED LISTENING SYSTEM
						41	42					0.2	EF-14
TOTALS													TOTALS

300 3

VOLTS: 120/208V,3Ø,4W MTG: RECESSED
TYPE: NQOD SOURCE: 3"C-4#300KCM & 1#4G
MAINS: 400 AMP TOTAL ___KVA

PANEL 'LL' (1)

SERVICE	LTG.	REC.	RES.	MOT.	CB	CKT	CKT	CB	LTG.	REC.	RES.	MOT.	SERVICE
RECEPT – LIBRARY		0.8			20/1	1	2	20/1		1.0			RECEPT – LIBRARY
		0.6				3	4			0.8			
		1.0				5	6			0.8			
SPARE						7	8				1.5		WH-2
						9	10						SPARE
						11	12						
						13	14						
						15	16						
						17	18						
SPACE						19	20	20/2				1.21	AC-1 (13.9MCA)
						21	22					1.21	
						23	24						SPACE
						25	26						
						27	28						
						29	30						
						31	32						
						33	34						
						35	36						
						37	38						
						39	40						
						41	42						
TOTALS													TOTALS

60A 3P

NOTE: POWDER COAT PAINT PANELBOARD COVER COLOR AS DIRECTED BY ARCHITECT.

VOLTS: 120/208V,3Ø,4W MTG: RECESSED
TYPE: NQOD SOURCE: 1½"C – 4#6, 1#10G
MAINS: 225 AMP TOTAL ___KVA

HKA
Harlan Krusemark - Architect
4415 Cowell Road, Suite 230
Concord, CA 94521
Tel: 925.681.1905
Fax: 925.681.1906

LICENSED ARCHITECT No. C23893 Exp. 9/30/01 STATE OF CALIFORNIA

WHM INCORPORATED
Engineering Consultants
1605 School Street
Moraga, CA 94556
Tel (925)376-2902 • Fax (925)376-2904
99104

REGISTERED PROFESSIONAL ENGINEER RICHARD M. MADGE No. E 8636 Exp. 6-30-02 ELECTRICAL STATE OF CALIFORNIA

Revisions | Date

HAWKINS SCHOOL
Darlene Lane
Tracy, CA 95376

Jefferson School District
7500 West Linne Road
Tracy, CA 95376

DSA FILE NO. 39-39
IDENTIFICATION STAMP DIVISION OF THE STATE ARCHITECT
APPL02 -102225
AC___ FLS ___ SS ___
DATE AUG 2 4 2000

Sheet Title: ELECTRICAL PANEL SCHEDULES

Printing Date / Purpose:
4/21/00 DSA REVIEW
8/18/00 DSA APPROVAL

Scale: NO SCALE
Project Number: 9903.00
Sheet Number: E0.3
- of Sheets
FILE:99104E03.dwg

3:25 pm 08/18/00
08/20/00 7:07:00 PM \\SERVER\CAD\1999\99104\99104E03.DWG

106

COPYRIGHT © 2000 HARLAN KRUSEMARK - ARCHITECT (HKA) THESE DRAWINGS ARE PROPRIETARY DOCUMENTS OF HKA AND ARE NOT TO BE DISTRIBUTED, PUBLISHED OR REPRODUCED WITHOUT WRITTEN PERMISSION OF HKA.

PANEL 'BH' (1)

SERVICE	LTG.	REC.	RES.	MOT.	CB	CKT	CKT	CB	LTG.	REC.	RES.	MOT.	SERVICE
LTG. - CLASSROOM 3C					20/1	1	2						HVAC - CLASSROOM 3C
- CLASSROOM 3D						3	4						
- STORAGE						5	6	3					
SPARE						7	8						- CLASSROOM 3D
						9	10						
						11	12	3					
SPACE						13	14	20/1					SPARE
						15	16						
						17	18						
						19	20						
						21	22						SPACE
						23	24						
						25	26						
						27	28						
						29	30	20/1	1.6				SITE LIGHTING
PANEL KH					100	31	32		1.6				SITE LIGHTING
						33	34		1.9				SITE LIGHTING
					3	35	36		1.75				SITE LIGHTING
PANEL CH					100	37	38	100					PANEL AH
						39	40						
					3	41	42	3					
TOTALS													TOTALS

250A 3P

VOLTS: 480/277V,3ø,4W MTG: SURFACE
TYPE: NF SOURCE: 3"C - 4#250KCM & 1#4G
MAINS: 400 AMP TOTAL ___KVA

PANEL 'LVD' (1)

SERVICE	LTG.	REC.	RES.	MOT.	CB	CKT	CKT	CB	LTG.	REC.	RES.	MOT.	SERVICE
PANEL 'AL'					100	1	2	60					PANEL 'CL'
						3	4						
					3	5	6	3					
PANEL 'JL'					60	7	8						SPACE
						9	10						
					3	11	12						
RECEPT - CLASSROOM 3C					20/1	13	14	20/1					RECEPT - CLASSROOM 3D
						15	16						
						17	18						
						19	20						
						21	22						
						23	24						
- STORAGE						25	26						SPARE
RPS - B		1.0				27	28						
EXHAUST						29	30						
SPACE						31	32						SPACE
						33	34						
						35	36						
						37	38						
						39	40						
						41	42						
TOTALS		1.0											TOTALS

300A 3P

VOLTS: 120/208V,3ø,4W MTG: SURFACE
TYPE: NQOD SOURCE: 3"C - 4#300KCM & 1#4G
MAINS: 400 AMP TOTAL 1.0 KVA

PANEL 'MKL'

SERVICE	LTG.	REC.	RES.	MOT.	CB	CKT	CKT	CB	LTG.	REC.	RES.	MOT.	SERVICE
RECEPT. - #1 COLD CABINET (1/3HP)				0.83	20/1	1	2	30			1.8		RECEPT. - #2 HOT CABINET
- #7 MILK COOLER (1/3HP,6.3A)				0.73		3	4	2			1.8		
- #3 FREEZER CAB. (1/5HP,4.0A)				0.46		5	6	15				0.79	#9 DISPOSER (1½"HP, 6.6A)
- #13 CONVEC. OVEN (1/3HP,6.0A)				0.69		7	8					0.79	
- #19 REACH-IN REF.-FREEZER(10.7A)				1.23		9	10	3				0.79	
- #20 ICE MAKER (12.3A)				1.41		11	12	20/1				1.56	#10 DISHWASHER (1HP,13.0A)
GAS SOLENOID VALVE						13	14	20				0.6	#18 MIXER (1¼HP,5.0A)
RECEPT. - #24 EXHAUST HOOD (300W)	0.3					15	16					0.6	
- #25 STEAM KETTLE (10.0A)			1.2			17	18	3				0.6	
- #26 MICROWAVE (1700W)			1.7			19	20						SPACE
- #6 HEATED TRANSPORT CAB.(18.0A)			2.14		30/1	21	22						
- #6 HEATED TRANSPORT CAB.(18.0A)			2.14			23	24						
- #6 HEATED TRANSPORT CAB.(18.0A)			2.14			25	26						
- #6 HEATED TRANSPORT CAB.(18.0A)			2.14			27	28						
LTG - DOOR,EVAP,COIL,DRAIN HTR,HTD VENT		①				29	30						
SPARE					20/1	31	32	20/1				.5	CIRC. PUMP
						33	34	50		4.0			RANGE
						35	36	2		4.0			
						37	38	150			10.0	1.0	#29 COMBI OVEN/STEAMER (94.0A)
						39	40				10.0	1.0	
IRRIGATION CONTROLLER		0.5				41	42	3			10.0		
TOTALS		0.5	11.46	5.35						8.0	33.6	7.73	TOTALS

VOLTS: 120/208V, 3ø, 4W MTG: RECESSED
TYPE: NQOD SOURCE: 2½"C - 4#3/0 & 1#6G
MAINS: 225 AMP
① VERIFY LOADS

NOTE: POWDER COAT PAINT COVER COAT AS DIRECTED BY ARCHITECT

TOTAL 66.64 KVA

PANEL 'HH' (1)

SERVICE	LTG.	REC.	RES.	MOT.	CB	CKT	CKT	CB	LTG.	REC.	RES.	MOT.	SERVICE
LTG. - CLASSROOM 5A					20/1	1	2						HVAC - CLASSROOM 5A
LTG. - CLASSROOM 5B						3	4						
LTG. - CLASSROOM 5C						5	6	3					
SPARE						7	8						HVAC - CLASSROOM 5B
						9	10						
						11	12	3					
SPACE						13	14						HVAC - CLASSROOM 5C
						15	16						
						17	18	3					
						19	20						SPACE
						21	22						
						23	24						
						25	26						
						27	28						
						29	30						
TOTALS													TOTALS

100A 3P

VOLTS: 480/277V,3ø,4W MTG: SURFACE NEMA 3R
TYPE: NF SOURCE: 1½"C - 4#2 & 1#8G
MAINS: 100 AMP

NOTE: POWDER COAT PAINT PANELBOARD COVER COLOR AS DIRECTED BY ARCHITECT.

TOTAL ___KVA

PANEL 'HL' (1)

SERVICE	LTG.	REC.	RES.	MOT.	CB	CKT	CKT	CB	LTG.	REC.	RES.	MOT.	SERVICE
RECEPT - CLASS ROOM 5A					20/1	1	2	20/1					RECEPT - CLASS ROOM 5B
						3	4						
						5	6						
						7	8						
						9	10						
						11	12						
RECEPT - CLASS ROOM 5C						13	14						SPARE
						15	16						
						17	18						
						19	20						
						21	22						
						23	24						
SPACE						25	26						SPACE
						27	28						
						29	30						
TOTALS													TOTALS

60A 3P

VOLTS: 120/208V,3ø,4W MTG: SURFACE NEMA 3R
TYPE: NQOD SOURCE: 1¼"C - 4#6 & 1#10G
MAINS: 100 AMP

NOTE: POWDER COAT PAINT PANELBOARD COVER COLOR AS DIRECTED BY ARCHITECT.

TOTAL ___KVA

PANEL 'JH'

SERVICE	LTG.	REC.	RES.	MOT.	CB	CKT	CKT	CB	LTG.	REC.	RES.	MOT.	SERVICE
LTG. - CLASSROOM 4A					20/1	1	2						HVAC - CLASSROOM 4A
LTG. - CLASSROOM 4B						3	4						
LTG. - CLASSROOM 4C						5	6	3					
SPARE						7	8						HVAC - CLASSROOM 4B
						9	10						
						11	12	3					
						13	14						HVAC - CLASSROOM 4C
PANEL HH					100	15	16						
						17	18	3					
					3	19	20						SPACE
SPACE						21	22						
						23	24						
						25	26						
						27	28						
						29	30						
TOTALS													TOTALS

150A 3P

VOLTS: 480/277V,3ø,4W MTG: SURFACE NEMA 3R
TYPE: NF SOURCE: 2"C - 4#1/0 & 1#6G
MAINS: 225A

NOTE: POWDER COAT PAINT PANELBOARD COVER COLOR AS DIRECTED BY ARCHITECT.

TOTAL ___KVA

PANEL 'JL' (1)

SERVICE	LTG.	REC.	RES.	MOT.	CB	CKT	CKT	CB	LTG.	REC.	RES.	MOT.	SERVICE
RECEPT - CLASS ROOM 4A					20/1	1	2	20/1					RECEPT - CLASS ROOM 5B
						3	4						
						5	6						
						7	8						
						9	10						
						11	12						
RECEPT - CLASS ROOM 4C						13	14						SPARE
						15	16						
						17	18						
						19	20						
						21	22						
						23	24						
SPACE						25	26	60					PANEL 'HL'
						27	28						
						29	30	3					
TOTALS													TOTALS

60A 3P

VOLTS: 120/208V,3ø,4W MTG: SURFACE NEMA 3R
TYPE: NQOD SOURCE: 1¼"C - 4#4 & 1#10G
MAINS: 100 AMP

NOTE: POWDER COAT PAINT PANELBOARD COVER COLOR AS DIRECTED BY ARCHITECT.

TOTAL ___KVA

SHEET NOTES

(1) ELECTRICAL LOADS IN PANELS ON MODULAR BUILDINGS SHALL BE FILLED IN BY CONTRACTOR.

HKA
Harlan Krusemark - Architect
4415 Cowell Road, Suite 230
Concord, CA 94521
Tel: 925.681.1905
Fax: 925.681.1906

LICENSED ARCHITECT HARLAN KRUSEMARK No. C23833 Exp. 9/30/01 STATE OF CALIFORNIA

WHM INCORPORATED
Engineering Consultants
1605 School Street
Moraga, CA 94556
Tel (925)376-2902 • Fax (925)376-2904
99104

REGISTERED PROFESSIONAL ENGINEER RICHARD A. MADSEN Exp. 9-30-02 ELECTRICAL STATE OF CALIFORNIA

Revisions | Date

HAWKINS SCHOOL
Darlene Lane
Tracy, CA 95376

Jefferson School District
7500 West Linne Road
Tracy, CA 95376

DSA FILE NO. 39-39
IDENTIFICATION STAMP
DIVISION OF THE STATE ARCHITECT
APPL02 -102225
AC___ FLS ___ SS ___
DATE AUG 2 4 2000

Sheet Title:
ELECTRICAL
PANEL SCHEDULES

Printing Date / Purpose:
4/21/00 DSA REVIEW
8/18/00 DSA APPROVAL

Scale: NO SCALE
Project Number: 9903.00
Sheet Number:
E0.4
- of - Sheets

COPYRIGHT © 2000 HARLAN KRUSEMARK - ARCHITECT (HKA) THESE DRAWINGS ARE PROPRIETARY DOCUMENTS OF HKA AND ARE NOT TO BE DISTRIBUTED, PUBLISHED OR REPRODUCED WITHOUT WRITTEN PERMISSION OF HKA.

4:38 pm 08/17/00 \\SERVER\CAD\1999\99104\99104E04.DWG 08/29/00 7:07:38 PM

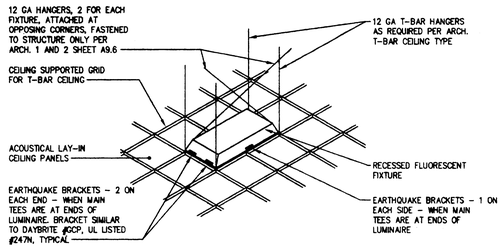

1 RECESSED FLUORESCENT FIXTURE MOUNTING DETAIL FOR T-BAR CEILING
NOT TO SCALE

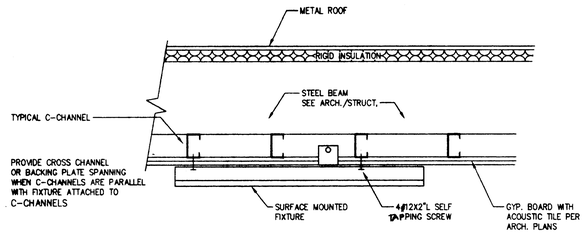

2 TYPICAL SURFACE MOUNTED FIXTURE DETAIL
NOT TO SCALE

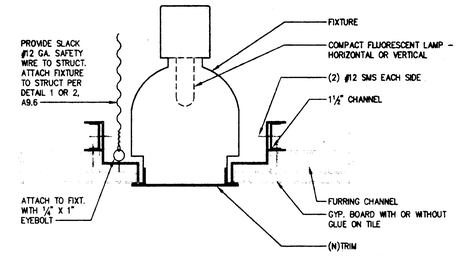

3 RECESSED FLUORESCENT DOWNLIGHT DETAIL
NOT TO SCALE

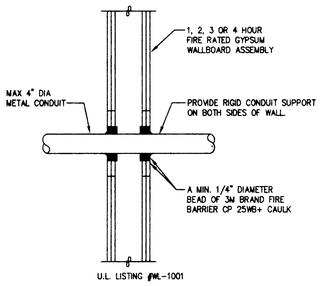

4 FIRE RATED CONDUIT PENETRATION DETAIL
NOT TO SCALE

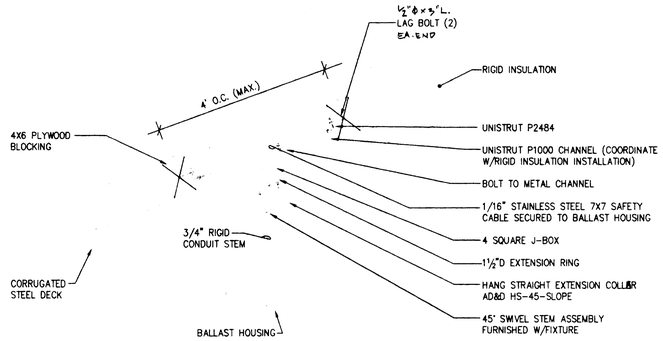

5 FIXTURE TYPE 'N' & 'O' MOUNTING DETAIL
NOT TO SCALE

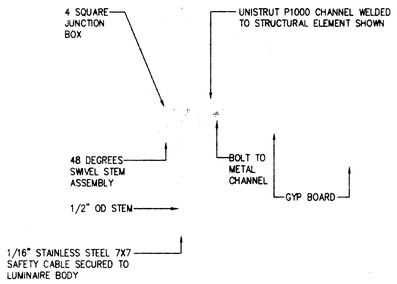

6 FIXTURE TYPE 'G' MOUNTING DETAIL
NOT TO SCALE

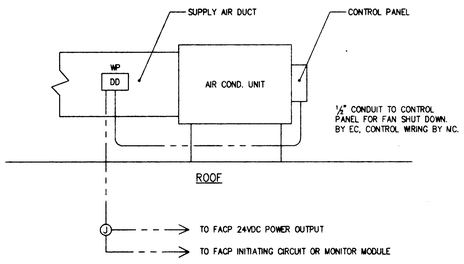

DUCT MOUNTED SMOKE DETECTOR (24 VDC) BY E.C., INSTALLED BY M.C. UNIT MUST BE INSTALLED IN A LOCATION ALONG DUCTWORK THAT MEETS MANUFACTURER'S OPTIMUM PERFORMANCE CRITERIA AND THAT IS ACCESSIBLE FOR MAINTAINANCE/TESTING UPON COMPLETING OF CONSTRUCTION.

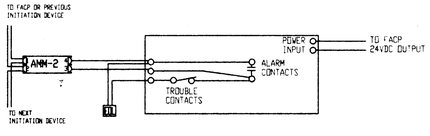

7 DUCT DETECTOR MOUNTING AND CIRCUIT DETAIL
NOT TO SCALE

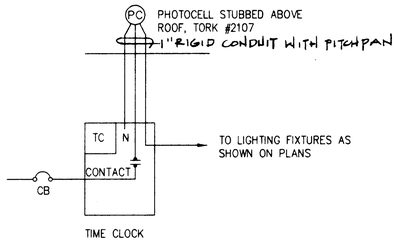

8 EXTERIOR LIGHTING CONTROL DIAGRAM
NOT TO SCALE

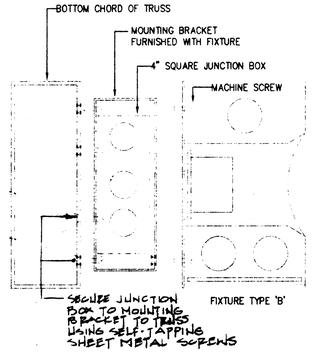

9 TYPE 'B' MOUNTING DETAIL
NOT TO SCALE

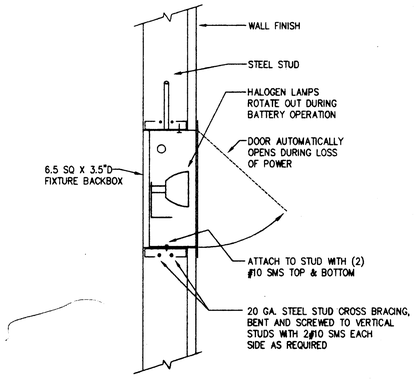

10 RECESSED FIXTURE MOUNTING DETAIL FOR GYP.-BOARD CEILING
NOT TO SCALE

11 FIXTURE TYPE 'EM' MOUNTING DETAIL
NOT TO SCALE

COPYRIGHT © 2000 HARLAN KRUSEMARK - ARCHITECT (HKA) THESE DRAWINGS ARE PROPRIETARY DOCUMENTS OF HKA AND ARE NOT TO BE DISTRIBUTED, PUBLISHED OR REPRODUCED WITHOUT WRITTEN PERMISSION OF HKA.

HKA
Harlan Krusemark - Architect
4415 Cowell Road, Suite 230
Concord, CA 94521
Tel: 925.681.1905
Fax: 925.681.1906

REGISTERED ARCHITECT HARLAN KRUSEMARK No. C23833 Exp. 9/30/01 STATE OF CALIFORNIA

WHM INCORPORATED
Engineering Consultants
1605 School Street
Moraga, CA 94556
Tel (925)376-2902 • Fax (925)376-2904
99104

REGISTERED PROFESSIONAL ENGINEER RICHARD A. MARSH No. E-18636 Exp. 9-30-02 ELECTRICAL STATE OF CALIFORNIA

Revisions | Date

HAWKINS SCHOOL

Darlene Lane
Tracy, CA 95376

Jefferson School District
7500 West Linne Road
Tracy, CA 95376

DSA FILE NO. 39-39
IDENTIFICATION STAMP
DIVISION OF THE STATE ARCHITECT
APPL02 -102225
AC RS
DATE AUG 2 4 2000

Sheet Title:
ELECTRICAL DETAILS

Printing Date / Purpose:
4/21/00 DSA REVIEW
8/18/00 DSA APPROVAL

Scale: AS NOTED
Project Number: 9903.00
Sheet Number:

E0.5

of Sheets

FILE: 99104E05.dwg

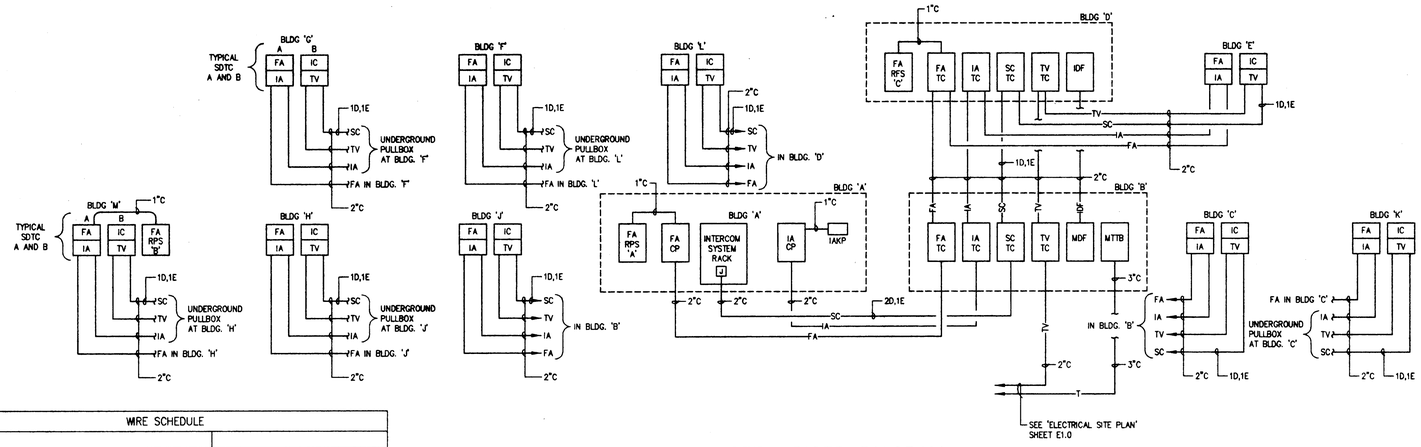

WIRE SCHEDULE		
TYPE		
D	WEST PENN #357	INSIDE BLDGS - SPEAKER/PHONE
	50 PAIR #22 TWISTED SHIELDED	OUTSIDE BLDGS - SPEAKER/PHONE
E	3#12	CLOCKS

FOR FIREALARM CONDUCTORS REFER TO 'ELECTRICAL FIREALARM SITE PLAN' SHEET E1.2.

1 SIGNAL AND DATA SYSTEM RISER DIAGRAM

NOT TO SCALE

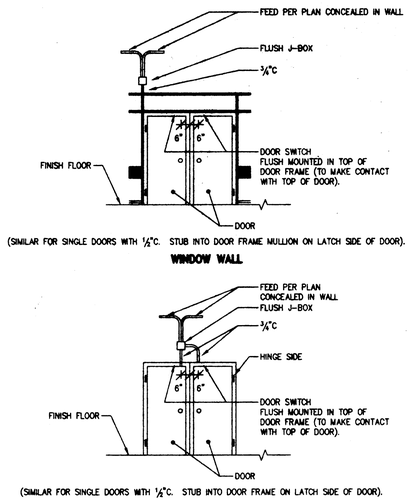

2 INTRUSION ALARM CONDUIT DETAIL @ DOORS

NOT TO SCALE

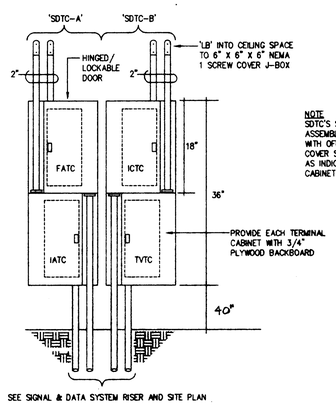

NOTE
SDTC'S SHALL BE CUSTOM MANUFACTURED ASSEMBLY CONTAINING TWO TERMINAL CABINETS WITH OFFSET CONDUIT ENTRIES AS SHOWN. COVER SHALL BE OF ONE PIECE WITH DOORS AS INDICATED AND SHALL COVER CONDUITS. CABINET DEPTH IS MIN. 6".

3 'SDTC' CABINET DETAIL - SURFACE MOUNT

NOT TO SCALE

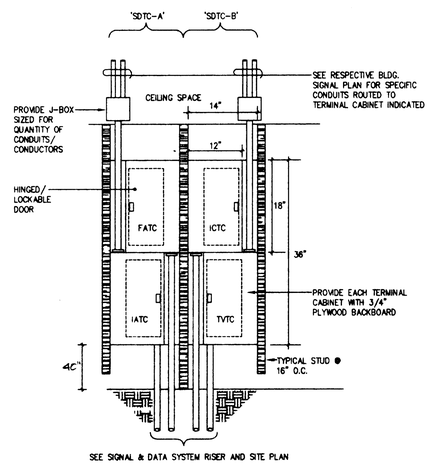

4 'SDTC' CABINET DETAIL - FLUSH IN-WALL

NOT TO SCALE

SIGNAL AND DATA ABBREVIATIONS	
FA	FIREALARM
IA	INTRUSION ALARM
IC	INTERCOM
TV	TELEVISION
IDF	INTERMEDIATE DATA FRAME (BY OTHERS)
MDF	MAIN DATA FRAME (BY OTHERS)
MTTB	MAIN TELEPHONE TERMINAL BOARD
TC	TERMINAL CABINET
SC	SOUND (INTERCOM) CABINET

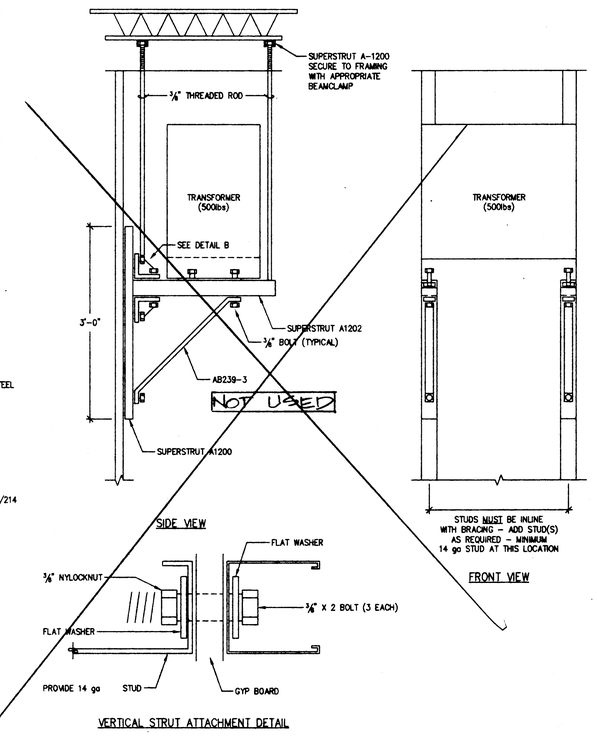

~~5 WALL MOUNTED TRANSFORMER MOUNTING DETAIL~~

NOT TO SCALE

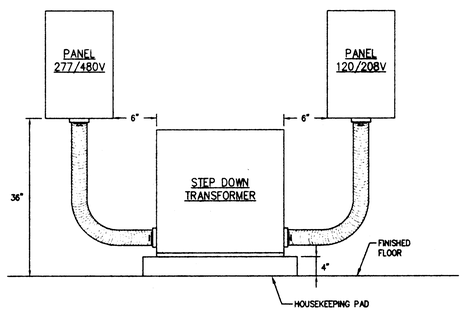

PANELBOARD/TRANSFORMER MOUNTING DETAIL

6 NOT TO SCALE

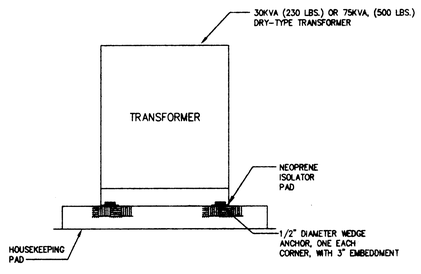

7 TRANSFORMER BOLT-DOWN DETAIL

NOT TO SCALE

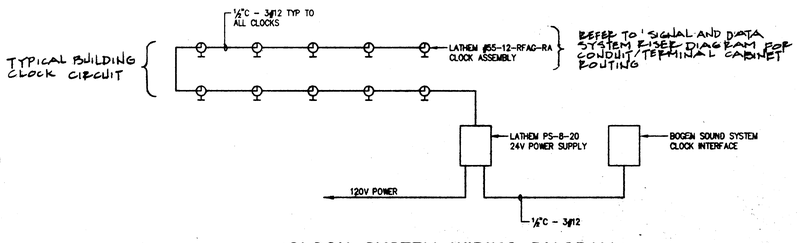

8 CLOCK SYSTEM WIRING DIAGRAM

NOT TO SCALE

COPYRIGHT © 2000 HARLAN KRUSEMARK - ARCHITECT (HKA) THESE DRAWINGS ARE PROPRIETARY DOCUMENTS OF HKA AND ARE NOT TO BE DISTRIBUTED, PUBLISHED OR REPRODUCED WITHOUT WRITTEN PERMISSION OF HKA.

HKA
Harlan Krusemark - Architect
4415 Cowell Road, Suite 230
Concord, CA 94521
Tel: 925.681.1905
Fax: 925.681.1906

REGISTERED PROFESSIONAL ENGINEER
No. C23633
Exp. 1/30/01
ELECTRICAL
STATE OF CALIFORNIA

WHM INCORPORATED
Engineering Consultants
1605 School Street
Moraga, CA 94556
Tel (925)376-2902 • Fax (925)376-2904
99104

REGISTERED PROFESSIONAL ENGINEER
No. E-8888
Exp. 6-30-02
ELECTRICAL
STATE OF CALIFORNIA

Revisions	Date

HAWKINS SCHOOL

Darlene Lane
Tracy, CA 95376

Jefferson School District
7500 West Linne Road
Tracy, CA 95376

DSA FILE NO. 39-30
IDENTIFICATION STAMP
DIVISION OF THE STATE ARCHITECT
APPL# 02 -102225
AC. PLS
DATE AUG 2 4 2000

Sheet Title:
ELECTRICAL
SPECIAL SYSTEMS
RISER DIAGRAM,
AND MOUNTING DETAIL

Printing Date / Purpose:
4/21/00 DSA REVIEW
8/18/00 DSA APPROVAL

Scale: AS SHOWN
Project Number: 9903.00
Sheet Number:

E0.6

of Sheets

FILE: 9903E0.DWG

0:54 pm 08/18/00
08/21/00 12:14:32 PM \\SERVER\CADD\1998\9910\9910HEDOK.DWG

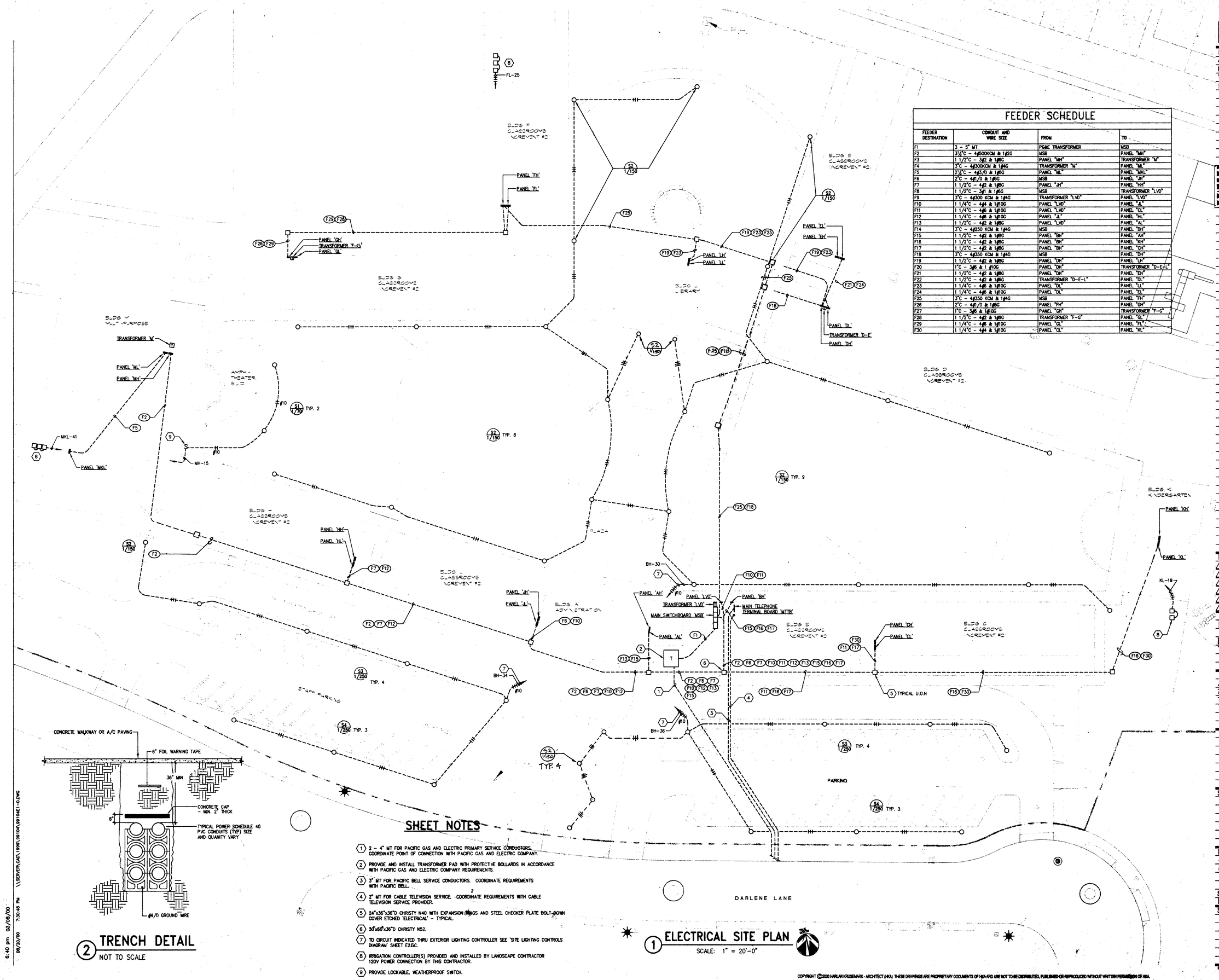

FEEDER SCHEDULE

FEEDER DESTINATION	CONDUIT AND WIRE SIZE	FROM	TO
F1	3 - 5" MT	PG&E TRANSFORMER	MSB
F2	3½"C - 4/500KCM & 1/#2G	MSB	PANEL "MH"
F3	1 1/2"C - 3/#2 & 1/#6G	PANEL "MH"	TRANSFORMER "M"
F4	3"C - 4/300KCM & 1/#4G	TRANSFORMER "M"	PANEL "ML"
F5	2½"C - 4/#3/0 & 1/#6G	PANEL "ML"	PANEL "MKL"
F6	2"C - 4/#1/0 & 1/#6G	MSB	PANEL "JH"
F7	1 1/2"C - 4/#2 & 1/#6G	PANEL "JH"	PANEL "HH"
F8	1 1/2"C - 3/#1 & 1/#6G	MSB	TRANSFORMER "LVD"
F9	3"C - 4/300 KCM & 1/#4G	TRANSFORMER "LVD"	PANEL "LVD"
F10	1 1/4"C - 4/#4 & 1/#10G	PANEL "LVD"	PANEL "JL"
F11	1 1/4"C - 4/#6 & 1/#10G	PANEL "LVD"	PANEL "GL"
F12	1 1/4"C - 4/#6 & 1/#10G	PANEL "JL"	PANEL "HL"
F13	1 1/2"C - 4/#2 & 1/#6G	PANEL "LVD"	PANEL "AL"
F14	3"C - 4/250 KCM & 1/#4G	MSB	PANEL "BH"
F15	1 1/2"C - 4/#2 & 1/#6G	PANEL "BH"	PANEL "AH"
F16	1 1/2"C - 4/#2 & 1/#6G	PANEL "BH"	PANEL "KH"
F17	1 1/2"C - 4/#2 & 1/#6G	PANEL "BH"	PANEL "CH"
F18	3"C - 4/350 KCM & 1/#4G	MSB	PANEL "DH"
F19	1 1/2"C - 4/#2 & 1/#6G	PANEL "DH"	PANEL "LH"
F20	1"C - 3/#6 & 1/#10G	PANEL "DH"	TRANSFORMER "D-E-L"
F21	1 1/2"C - 4/#2 & 1/#6G	PANEL "DH"	PANEL "EH"
F22	1 1/2"C - 4/#2 & 1/#6G	TRANSFORMER "D-E-L"	PANEL "DL"
F23	1 1/4"C - 4/#6 & 1/#10G	PANEL "DL"	PANEL "LL"
F24	1 1/4"C - 4/#6 & 1/#10G	PANEL "DL"	PANEL "EL"
F25	3"C - 4/350 KCM & 1/#4G	MSB	PANEL "FH"
F26	2"C - 4/#1/0 & 1/#6G	PANEL "FH"	PANEL "GH"
F27	1"C - 3/#6 & 1/#10G	PANEL "GH"	TRANSFORMER "F-G"
F28	1 1/2"C - 4/#2 & 1/#6G	TRANSFORMER "F-G"	PANEL "GL"
F29	1 1/4"C - 4/#6 & 1/#10G	PANEL "GL"	PANEL "FL"
F30	1 1/4"C - 4/#6 & 1/#10G	PANEL "CL"	PANEL "KL"

2 TRENCH DETAIL

NOT TO SCALE

SHEET NOTES

1. 2 - 4" MT FOR PACIFIC GAS AND ELECTRIC PRIMARY SERVICE CONDUCTORS. COORDINATE POINT OF CONNECTION WITH PACIFIC GAS AND ELECTRIC COMPANY.
2. PROVIDE AND INSTALL TRANSFORMER PAD WITH PROTECTIVE BOLLARDS IN ACCORDANCE WITH PACIFIC GAS AND ELECTRIC COMPANY REQUIREMENTS.
3. 3" MT FOR PACIFIC BELL SERVICE CONDUCTORS. COORDINATE REQUIREMENTS WITH PACIFIC BELL.
4. 2" MT FOR CABLE TELEVISION SERVICE. COORDINATE REQUIREMENTS WITH CABLE TELEVISION SERVICE PROVIDER.
5. 24"x36"x36"D CHRISTY N40 WITH EXPANSION RINGS AND STEEL CHECKER PLATE BOLT-DOWN COVER ETCHED 'ELECTRICAL' - TYPICAL.
6. 30"x60"x36"D CHRISTY N52.
7. TO CIRCUIT INDICATED THRU EXTERIOR LIGHTING CONTROLLER SEE 'SITE LIGHTING CONTROLS DIAGRAM' SHEET E2.6C.
8. IRRIGATION CONTROLLER(S) PROVIDED AND INSTALLED BY LANDSCAPE CONTRACTOR 120V POWER CONNECTION BY THIS CONTRACTOR.
9. PROVIDE LOCKABLE, WEATHERPROOF SWITCH.

1 ELECTRICAL SITE PLAN

SCALE: 1" = 20'-0"

COPYRIGHT © 2000 HARLAN KRUSEMARK - ARCHITECT (HKA) THESE DRAWINGS ARE PROPRIETARY DOCUMENTS OF HKA AND ARE NOT TO BE DISTRIBUTED, PUBLISHED OR REPRODUCED WITHOUT WRITTEN PERMISSION OF HKA.

HKA
Harlan Krusemark - Architect
4415 Cowell Road, Suite 230
Concord, CA 94521
Tel: 925.681.1906
Fax: 925.681.1906

LICENSED ARCHITECT HARLAN KRUSEMARK No. C23833 Exp. 9/30/01 STATE OF CALIFORNIA

WHM INCORPORATED
Engineering Consultants
1605 School Street
Moraga, CA 94556
Tel (925)376-2902 • Fax (925)376-2904
99104

REGISTERED PROFESSIONAL ENGINEER RICHARD A. BOSCHETTI No. E-14116 Exp. 6-30-02 ELECTRICAL STATE OF CALIFORNIA

Revisions	Date

HAWKINS SCHOOL

Darlene Lane
Tracy, CA 95376

Jefferson School District
7500 West Linne Road
Tracy, CA 95376

DSA FILE NO. 39-39
IDENTIFICATION STAMP
DIVISION OF THE STATE ARCHITECT
APPL.02 -102225
AC ___ FLS ___
DATE AUG 2 4 2000

Sheet Title:
ELECTRICAL SITE PLAN
POWER DISTRIBUTION

Printing Date / Purpose:
4/21/00 DSA REVIEW
8/18/00 DSA APPROVAL

Scale: 1" = 20'-0"
Project Number: 9903.00
Sheet Number:

E1.0

of Sheets

FILE: 99104E10.dwg

6:40 pm 03/08/00 08/30/00 7:30:48 PM \\SERVER\CAD\1999\99104\99104E1-0.DWG

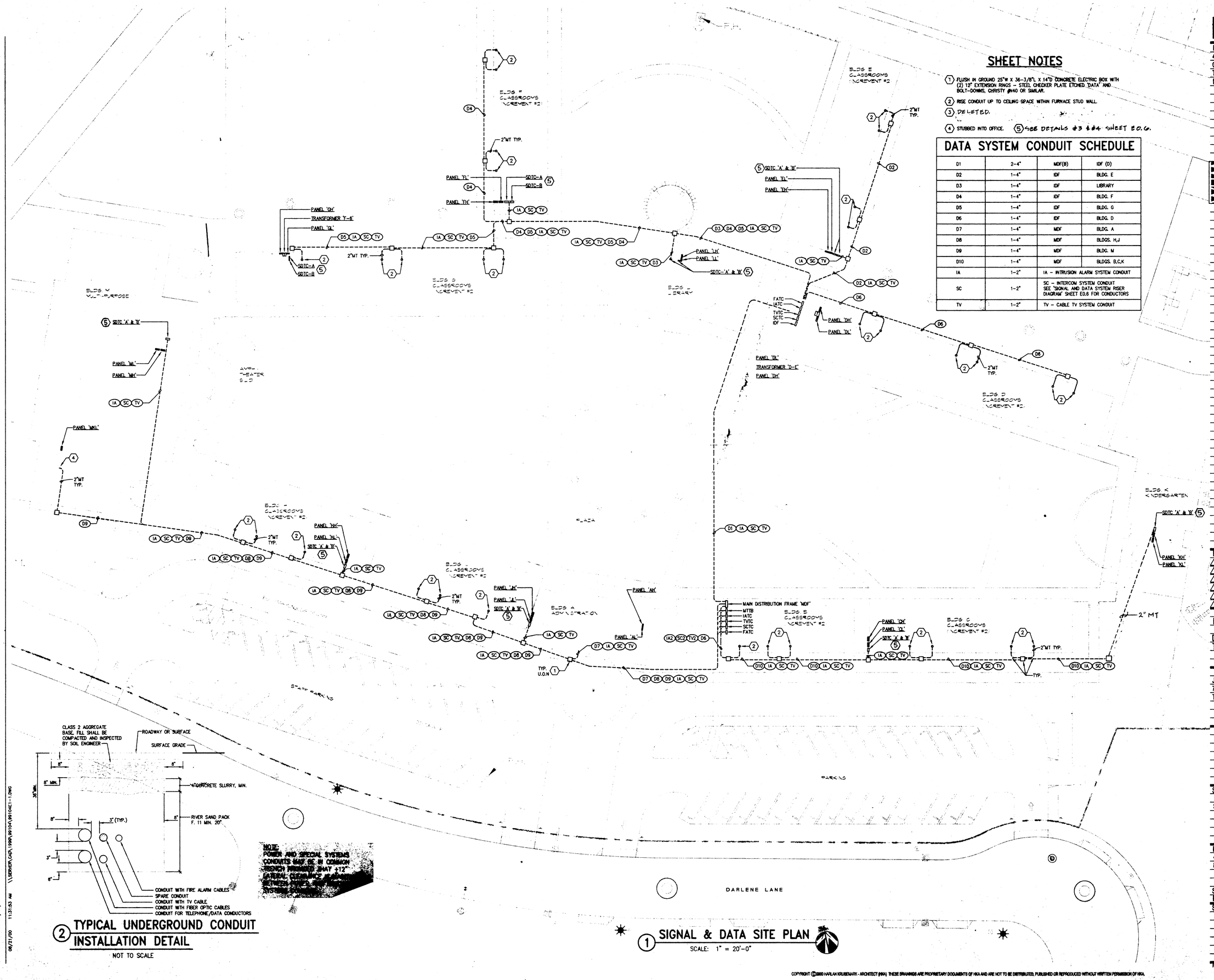

SHEET NOTES

1. FLUSH IN GROUND 25"W X 36-3/8"L X 14"D CONCRETE ELECTRIC BOX WITH (2) 12" EXTENSION RINGS – STEEL CHECKER PLATE ETCHED 'DATA' AND BOLT-DOWNS, CHRISTY #H40 OR SIMILAR.
2. RISE CONDUIT UP TO CEILING SPACE WITHIN FURNACE STUD WALL.
3. DELETED.
4. STUBBED INTO OFFICE.
5. SEE DETAILS #3 & #4 SHEET E0.6.

DATA SYSTEM CONDUIT SCHEDULE

D1	2–4"	MDF(B)	IDF (D)
D2	1–4"	IDF	BLDG. E
D3	1–4"	IDF	LIBRARY
D4	1–4"	IDF	BLDG. F
D5	1–4"	IDF	BLDG. G
D6	1–4"	IDF	BLDG. D
D7	1–4"	MDF	BLDG. A
D8	1–4"	MDF	BLDGS. H,J
D9	1–4"	MDF	BLDG. M
D10	1–4"	MDF	BLDGS. B,C,K
IA	1–2"	IA – INTRUSION ALARM SYSTEM CONDUIT	
SC	1–2"	SC – INTERCOM SYSTEM CONDUIT SEE 'SIGNAL AND DATA SYSTEM RISER DIAGRAM' SHEET E0.6 FOR CONDUCTORS	
TV	1–2"	TV – CABLE TV SYSTEM CONDUIT	

NOTE:
POWER AND SPECIAL SYSTEMS CONDUITS MAY BE IN COMMON TRENCH WITHIN SHAFT +12" LATERAL CLEARANCE AS [illegible] BETWEEN POWER AND SPECIAL SYSTEMS CONDUITS.

2 TYPICAL UNDERGROUND CONDUIT INSTALLATION DETAIL

NOT TO SCALE

1 SIGNAL & DATA SITE PLAN

SCALE: 1" = 20'-0"

COPYRIGHT © 2000 HARLAN KRUSEMARK - ARCHITECT (HKA) THESE DRAWINGS ARE PROPRIETARY DOCUMENTS OF HKA AND ARE NOT TO BE DISTRIBUTED, PUBLISHED OR REPRODUCED WITHOUT WRITTEN PERMISSION OF HKA.

HKA
Harlan Kruesemark - Architect
4415 Cowell Road, Suite 230
Concord, CA 94521
Tel: 925.681.1905
Fax: 925.681.1906

LICENSED ARCHITECT HARLAN KRUSEMARK No. C21653 Exp. 9/30/01 STATE OF CALIFORNIA

WHM INCORPORATED
Engineering Consultants
1605 School Street
Moraga, CA 94556
Tel (925)376-2902 • Fax (925)376-2904
99104

REGISTERED PROFESSIONAL ENGINEER EDWARD A. BURKE No. E-18036 Exp. 9-30-02 ELECTRICAL STATE OF CALIFORNIA

Revisions	Date

HAWKINS SCHOOL

Darlene Lane
Tracy, CA 95376

Jefferson School District
7500 West Linne Road
Tracy, CA 95376

DSA FILE NO. 39-39
IDENTIFICATION STAMP
DIVISION OF THE STATE ARCHITECT
APPL# 02 -102225
AC. FLA
DATE AUG 2 4 2000

Sheet Title:
ELECTRICAL SITE PLAN
SIGNAL, AND DATA

Printing Date / Purpose:
4/21/00 DSA REVIEW
8/18/00 DSA APPROVAL

Scale: 1" = 20'-0"
Project Number: 9903.00
Sheet Number:

E1.1

FILE: 9910-4ET0.2.dwg

10:13 am 08/18/00
08/21/00 11:31:53 AM \\SERVER\CAD\1998\9910\9910HE1-1.DWG

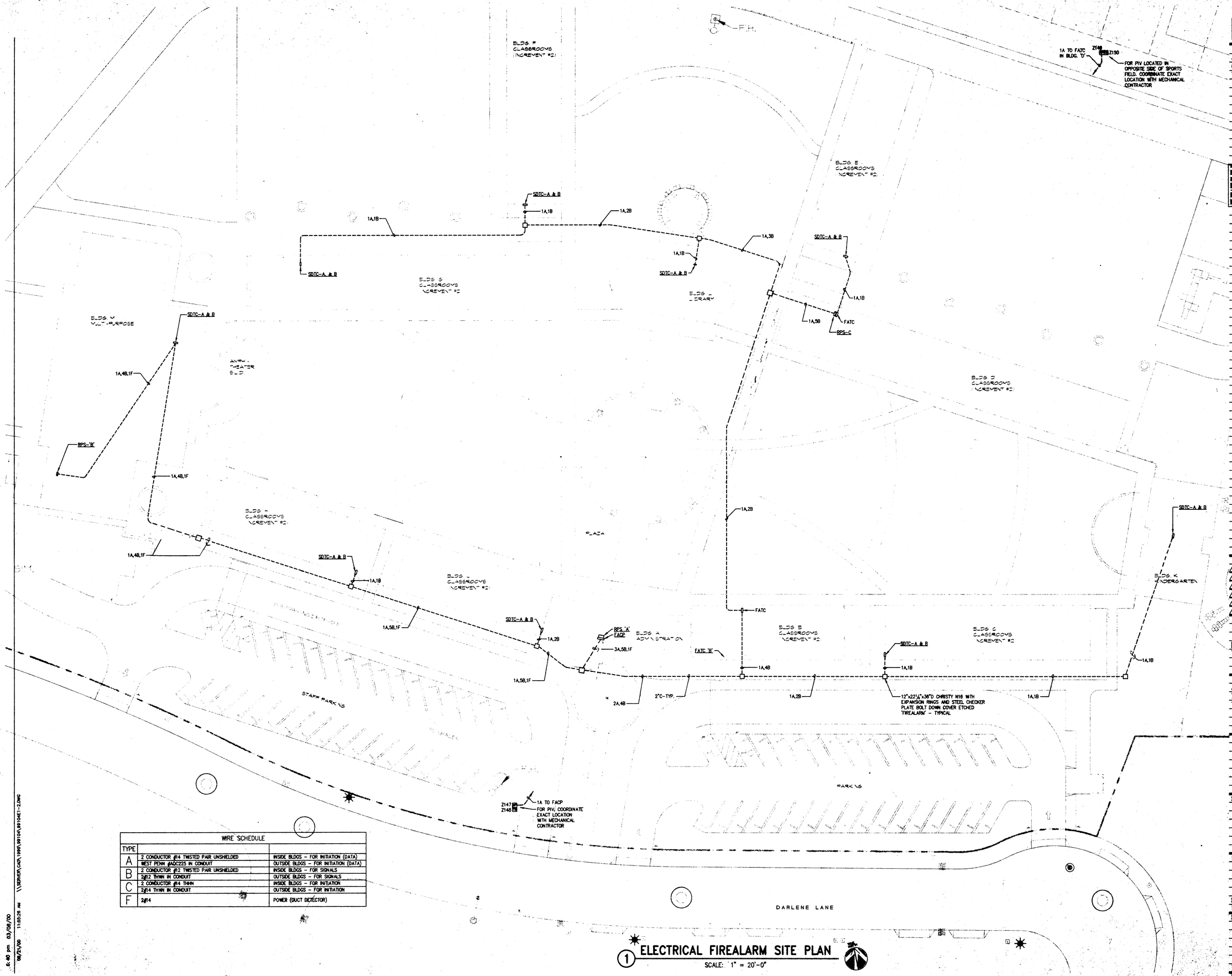

WIRE SCHEDULE		
TYPE		
A	2 CONDUCTOR #14 TWISTED PAIR UNSHIELDED	INSIDE BLDGS - FOR INITIATION (DATA)
	WEST PENN #ADC225 IN CONDUIT	OUTSIDE BLDGS - FOR INITIATION (DATA)
B	2 CONDUCTOR #12 TWISTED PAIR UNSHIELDED	INSIDE BLDGS - FOR SIGNALS
	2#12 THWN IN CONDUIT	OUTSIDE BLDGS - FOR SIGNALS
C	2 CONDUCTOR #14 THWN	INSIDE BLDGS - FOR INITIATION
	2#14 THWN IN CONDUIT	OUTSIDE BLDGS - FOR INITIATION
F	2#14	POWER (DUCT DETECTOR)

1 ELECTRICAL FIREALARM SITE PLAN

SCALE: 1" = 20'-0"

COPYRIGHT ©2000 HARLAN KRUSEMARK - ARCHITECT (HKA) THESE DRAWINGS ARE PROPRIETARY DOCUMENTS OF HKA AND ARE NOT TO BE DISTRIBUTED, PUBLISHED OR REPRODUCED WITHOUT WRITTEN PERMISSION OF HKA.

HKA
Harlan Krusemark - Architect
4415 Cowell Road, Suite 230
Concord, CA 94521
Tel: 925.681.1905
Fax: 925.681.1906

REGISTERED ARCHITECT HARLAN KRUSEMARK No. C23853 Exp. 1/31/01 STATE OF CALIFORNIA

WHM INCORPORATED
Engineering Consultants
1605 School Street
Moraga, CA 94556
Tel (925)376-2802 • Fax (925)376-2808

REGISTERED PROFESSIONAL ENGINEER WILLIAM H. MEYER No. E-8890 Exp. 6-30-02 ELECTRICAL STATE OF CALIFORNIA

Revisions	Date

HAWKINS SCHOOL

Darlene Lane
Tracy, CA 95376

Jefferson School District
7500 West Linne Road
Tracy, CA 95376

DSA FILE NO. 99-30

IDENTIFICATION STAMP
DIVISION OF THE STATE ARCHITECT
APPLIC. 102225
AC. FLA
DATE AUG 2 4 2000

Sheet Title:
ELECTRICAL SITE PLAN
FIREALARM

Printing Date / Purpose:
4/21/00 DSA REVIEW.
8/18/00 DSA APPROVAL

Scale: 1" = 20'-0"
Project Number: 9803.00
Sheet Number:

E1.2

FILE: 9910-E2.1B.dwg

08/21/00 11:55:26 AM \\SERVER\CAD\1998\9810A\9810A\9810-E1-2.DWG
6:40 pm 03/06/00

SHEET NOTES

1. FLEX CONNECTION BETWEEN MASTER (M) AND SLAVE (S) FIXTURES FURNISHED WITH FIXTURE.
2. EXTEND TO CIRCUIT INDICATED THROUGH PHOTOCELL STUBBED ABOVE ROOF. SEE 'EXTERIOR LIGHTING CONTROL DIAGRAM'.
3. EXTERIOR LIGHTING TIME CLOCK - MOUNT FLUSH IN WALL BETWEEN AND ABOVE PANEL BOARDS TORK #EW101-3/FLG. SEE DETAIL #8 SHEET E0.5
4. TWO SWITCHES, a AND b. CONNECT 'a' TO CONTROL OUTBOARD LAMPS, 'b' TO CONTROL INBOARD LAMP(S).
5. 1PST 20 AMP CONTACTOR WITH 277V CONTROL COIL IN NEMA 1 BOX IN ATTIC SPACE.
6. UP TO LIGHT FIXTURE IN MECHANICAL MEZZANINE. SEE SHEET E2.1B.
7. DOWN TO RECEPTACLE. SEE SHEET E2.1B.
8. PROVIDE BODINE #B-50 BATTERY PACK TO OPERATE TWO DOWN LIGHTS IN THIS SECTION OF FIXTURE TYPE 'L'.

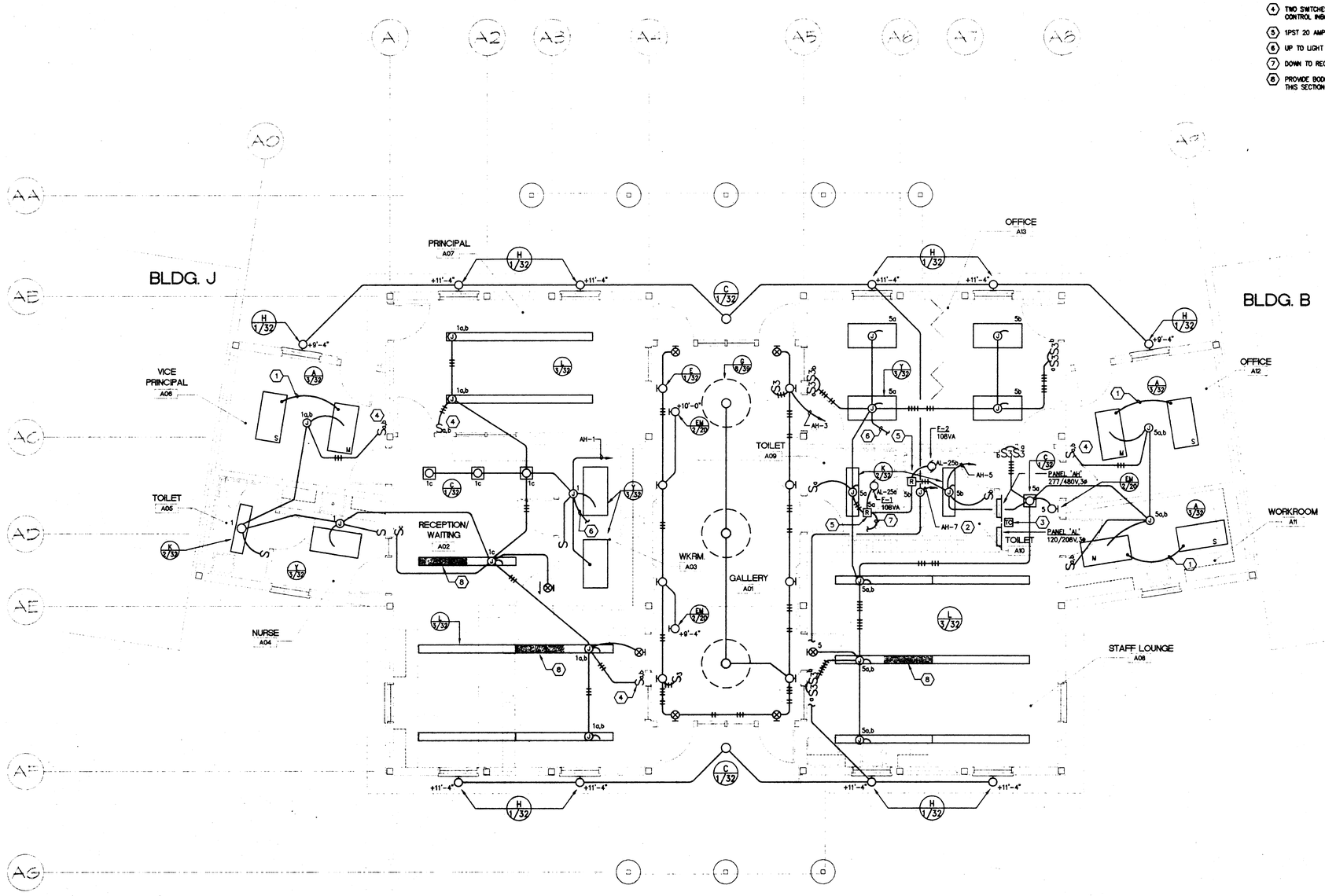

1 ELECTRICAL BLDG 'A': ADMIN LIGHTING PLAN

SCALE: 1/4" = 1'-0"

TRUE NORTH

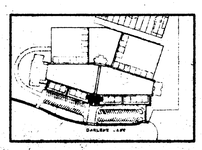

SITE KEY

HKA
Harlan Kruisemark - Architect
4415 Cowell Road, Suite 230
Concord, CA 94521
Tel: 925.681.1905
Fax: 925.681.1906

LICENSED ARCHITECT HARLAN KRUISEMARK No. C13833 Exp. 1/30/01 STATE OF CALIFORNIA

WHM INCORPORATED
Engineering Consultants
1605 School Street
Moraga, CA 94556
Tel (925)376-2902 • Fax (925)376-2904
99104

REGISTERED PROFESSIONAL ENGINEER RICHARD A. MORRIS No. E-13-02 Exp. 6-30-02 ELECTRICAL STATE OF CALIFORNIA

Revisions	Date

HAWKINS SCHOOL

Darlene Lane
Tracy, CA 95376

Jefferson School District
7500 West Linne Road
Tracy, CA 95376

DSA FILE NO. 39-39
IDENTIFICATION STAMP
DIVISION OF THE STATE ARCHITECT
APPL# 102225
AC FLA RA SSC CC
DATE: AUG 2 4 2000

Sheet Title:
ELECTRICAL BUILDING A;
ADMINISTRATION
LIGHTING PLAN

Printing Date / Purpose:
4/21/00 DSA REVIEW
8/18/00 DSA APPROVAL

Scale: 1/4" = 1'-0"
Project Number: 9903.00
Sheet Number:

E2.1A

FILE: 9910452-1A.dwg

3:14 pm 08/17/00
08/20/00 7:20:28 PM \\SERVER\CAD\1999\9910\9910452-1A.DWG

COPYRIGHT © 2000 HARLAN KRUISEMARK - ARCHITECT (HKA) THESE DRAWINGS ARE PROPRIETARY DOCUMENTS OF HKA AND ARE NOT TO BE DISTRIBUTED, PUBLISHED OR REPRODUCED WITHOUT WRITTEN PERMISSION OF HKA.

SHEET NOTES

1. MOUNT OUTLET(S) ABOVE COUNTER, COORDINATE WITH INTERIOR ELEVATIONS.
2. GFI RECEPTACLE IN WEATHERPROOF J-BOX WITH WEATHERPROOF COVER PLATE. SURFACE MOUNT TO SIDE OF MECHANICAL UNIT CLEAR OF REMOVABLE ACCESS PANEL.

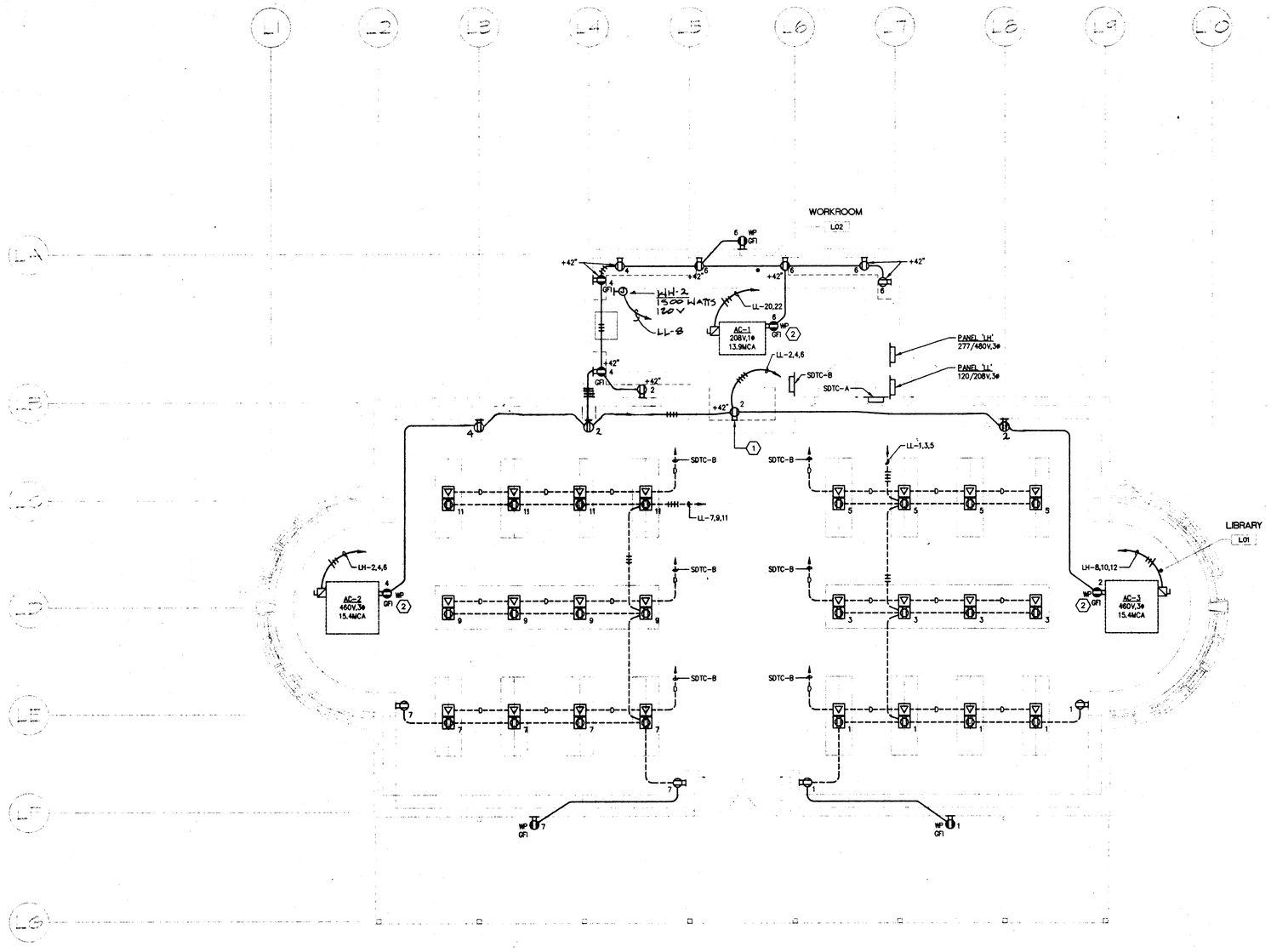

1 ELECTRICAL BLDG 'L': LIBRARY POWER PLAN

SCALE: 1/4" = 1'-0"

TRUE NORTH

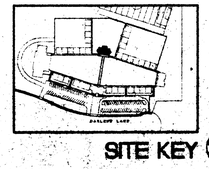

SITE KEY

HKA
Harlan Kruisemark - Architect
4415 Cowell Road, Suite 230
Concord, CA 94521
Tel: 925.681.1905
Fax: 925.681.1906

REGISTERED ARCHITECT
No. C23153
Exp. 9/30/00
STATE OF CALIFORNIA

WHM INCORPORATED
Engineering Consultants
1605 Schpal Street
Moraga, CA 94556
Tel (925)376-2902 • Fax (925)376-2904
99104

REGISTERED PROFESSIONAL ENGINEER
ELECTRICAL
No. E 6835
Exp. 6-30-02
STATE OF CALIFORNIA

Revisions	Date

HAWKINS SCHOOL

Darlene Lane
Tracy, CA 95376

Jefferson School District
7500 West Linne Road
Tracy, CA 95376

DSA FILE NO. 39-30

IDENTIFICATION STAMP
DIVISION OF THE STATE ARCHITECT
APPL# 22 -102225
AC. ___ FLS. ___
DATE AUG 2 4 2000

Sheet Title:
ELECTRICAL BUILDING L:
LIBRARY
POWER PLAN

Printing Date / Purpose:
4/21/00 DSA REVIEW
8/18/00 DSA APPROVAL

Scale: 1/4" = 1'-0"
Project Number: 9903.00
Sheet Number:

E2.3B

FILE: 9903E2-3B.dwg

COPYRIGHT © 2000 HARLAN KRUISEMARK - ARCHITECT (HKA), THESE DRAWINGS ARE PROPRIETARY DOCUMENTS OF HKA AND ARE NOT TO BE DISTRIBUTED, PUBLISHED OR REPRODUCED WITHOUT WRITTEN PERMISSION OF HKA.

4:36 pm 04/13/00
08/29/00 7:24:58 PM \\STORER\CAD\JOBS\9903\DWG\9903E2-3B.DWG

SHEET NOTES

1. MOUNT OUTLET(S) ABOVE COUNTER, COORDINATE WITH INTERIOR ELEVATIONS.
2. COORDINATE EXACT LOCATION WITH MECHANICAL CONTRACTOR.

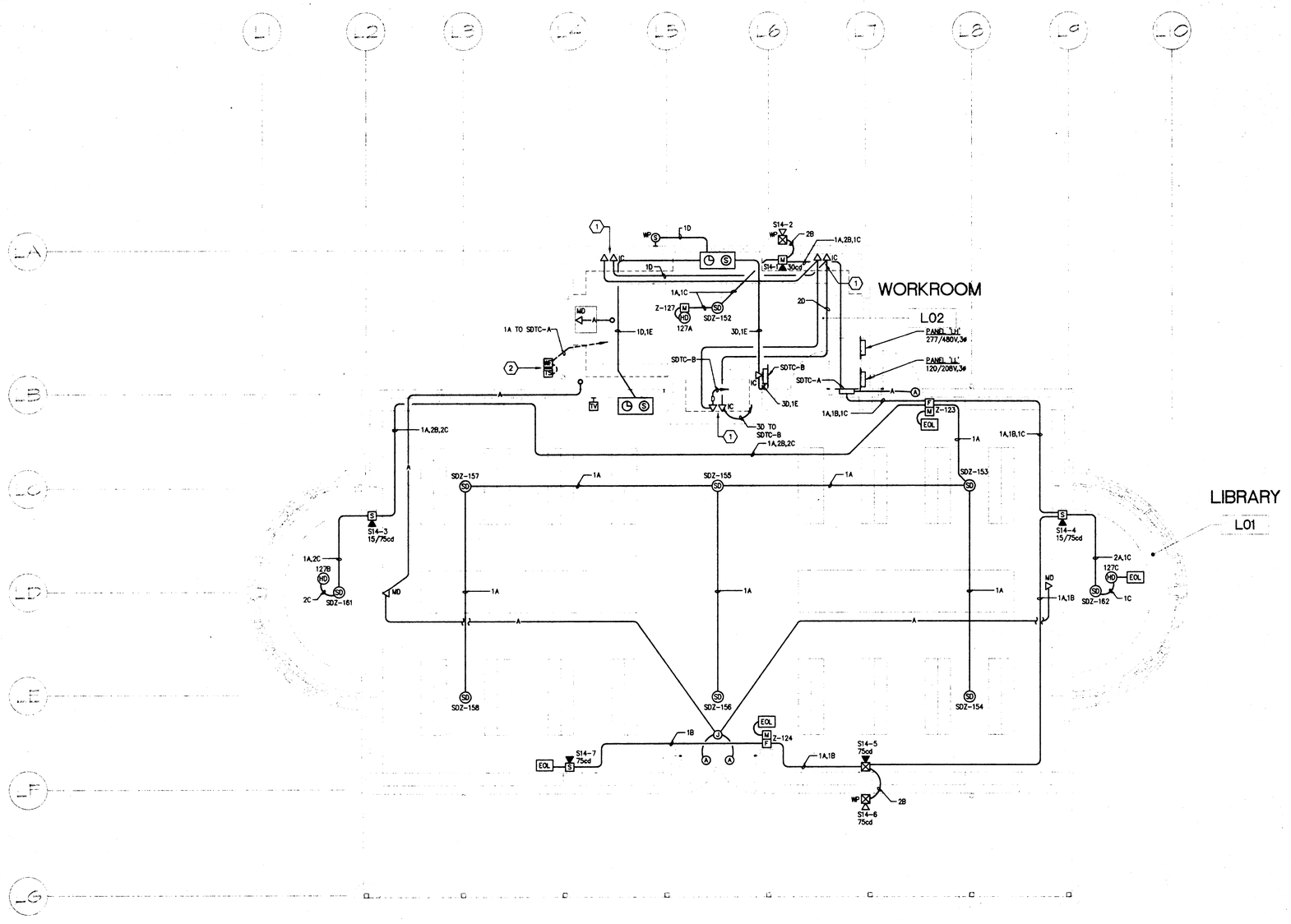

1 ELECTRICAL BLDG 'L': LIBRARY SIGNAL PLAN

SCALE: 1/4" = 1'-0"

SITE KEY

HKA
Harlan Kruisemark - Architect
4415 Cowell Road, Suite 230
Concord, CA 94521
Tel: 925.681.1905
Fax: 925.681.1908

WHM INCORPORATED
Engineering Consultants
1605 School Street
Moraga, CA 94556
Tel (925)376-2902 • Fax (925)376-2909
99104

Revisions	Date

HAWKINS SCHOOL

Darlene Lane
Tracy, CA 95376

Jefferson School District
7500 West Linne Road
Tracy, CA 95376

DSA FILE NO. 39-30

IDENTIFICATION STAMP
DIVISION OF THE STATE ARCHITECT
APPLIC. 102225
AC. PA.102 SEC.
DATE AUG 2 4 2000

Sheet Title:
ELECTRICAL BUILDING 'L'
LIBRARY
FIREALARM AND
SIGNAL PLAN

Printing Date / Purpose:
4/21/00 DSA REVIEW
8/18/00 DSA APPROVAL

Scale: 1/4" = 1'-0"
Project Number: 9903.06
Sheet Number:

E2.3C

COPYRIGHT © 2000 HARLAN KRUISEMARK - ARCHITECT (HKA) THESE DRAWINGS ARE PROPRIETARY DOCUMENTS OF HKA AND ARE NOT TO BE DISTRIBUTED, PUBLISHED OR REPRODUCED WITHOUT WRITTEN PERMISSION OF HKA.

4:57 pm 08/18/00
08/20/00 7:39:00 PM \\SERVER\CAD\1999\9918\9918422-3C.DWG

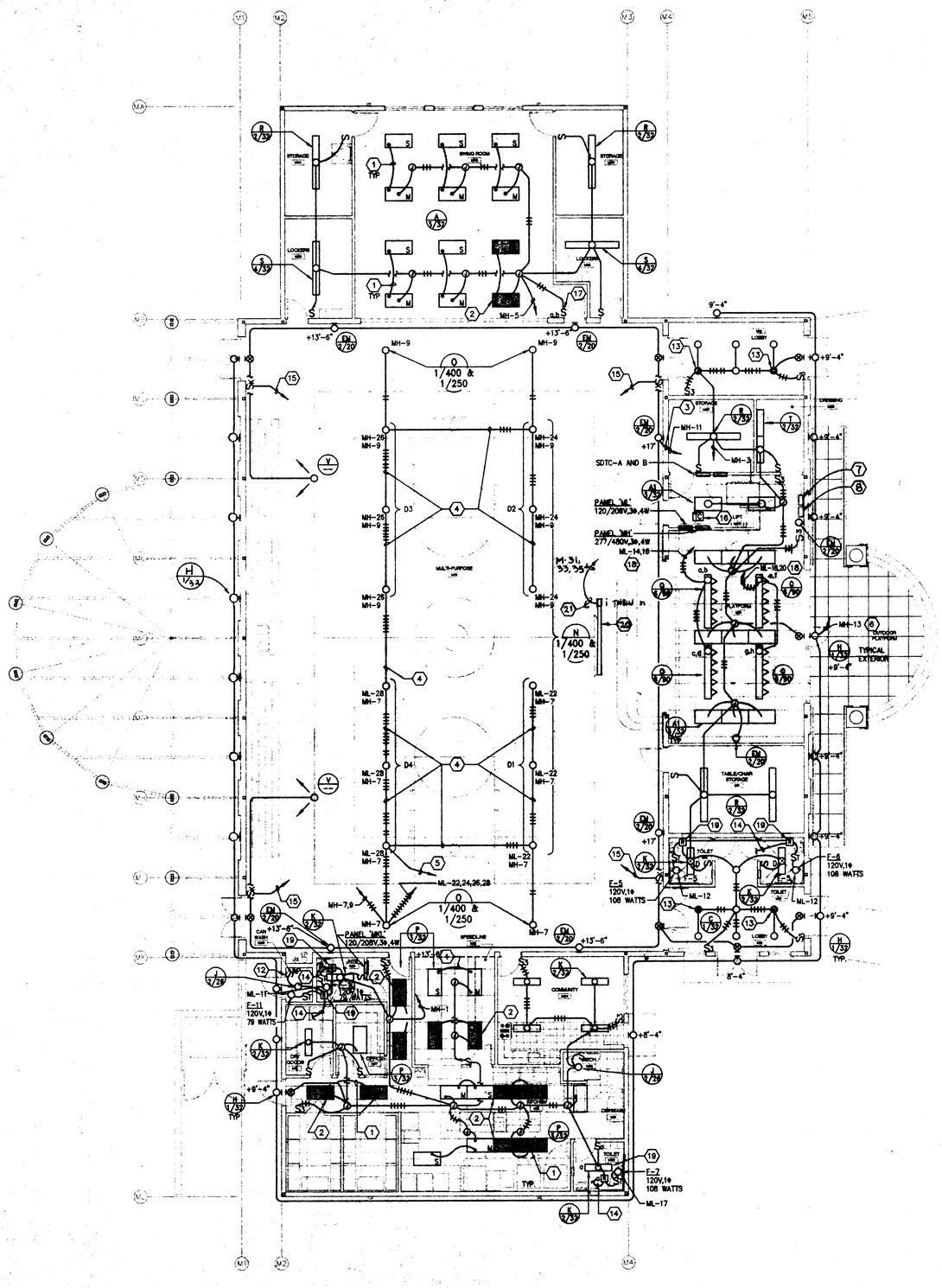

1 ELECTRICAL BLDG 'M': MULTI-PURPOSE LIGHTING PLAN

SCALE: 1/8" = 1'-0"

SHEET NOTES

1. FLEX CONNECTION BETWEEN MASTER (M) AND SLAVE (S) FIXTURES FURNISHED WITH FIXTURE.
2. PROVIDE EMERGENCY BATTERY PACK TO OPERATE CENTER LAMPS ONLY. BODINE-50 OR EQUAL.
3. EXTEND TO CIRCUIT INDICATED. PROVIDE CIRCUIT BREAKER LOCK-ON DEVICE.
4. PULL IN SWITCH LEVEL INTERFACE CONTROL CONDUCTOR(S). IN PANEL FEED CONDUIT.
5. ½" CONDUIT WITH SWITCH LEVEL INTERFACE CONTROL CONDUCTOR(S) TO SWITCH LEVEL INTERFACE CONTROL SWITCH. SEE 'CONTROLS ELEVATION'.
6. TO CIRCUIT INDICATED THROUGH PHOTOCELL CONTROLLER STUBBED ABOVE ROOF. SEE 'EXTERIOR LIGHTING CONTROL DIAGRAM'.
7. DIMMER CONTROL PANEL 'DCP'., HUNT # SPRL-16WTH16- 1500W DIMMERS 'a' THROUGH 'n'. SEE 'CONTROLS ELEVATION'. PULL A SEPARATE NEUTRAL PER CIRCUIT - DO NOT COMBINE NEUTRALS.
8. SWITCH LEVEL INTERFACE CONTROL SWITCH. HUBBELL #SLIC. SEE 'CONTROLS ELEVATION', CONNECT PER MFGR'S WIRING DIAGRAM.
9. MOUNT SWITCHES IN COMMON MULTI-GANG J-BOX. PROVIDE SINGLE ENGRAVED STAINLESS STEEL COVER PLATE INDICATING FUNCTIONS.
10. DIMMER SWITCHES LOCATED IN DIMMER CONTROL PANEL 'DCP'.
11. PROVIDE EMERGENCY BATTERY PACK TO OPERATE BOTH LAMPS AT 700 LUMENS TOTAL. BODINE B-50 OR EQUAL.
12. PROVIDE HUBBELL #1750 WP PRESSWITCH FOR CONTROL OF FIXTURE TYPE 'W'. CONNECT TO NEAREST 120V CIRCUIT.
13. PROVIDE 'EM' OPTION FOR THIS FIXTURE.
14. DOWN TO RECEPTACLE. SEE SHEET E2.4B.
15. SEE GYMNASIUM LIGHTING CONTROL SCHEMATIC THIS SHEET.
16. EXTERIOR LIGHTING TIME CLOCK - MOUNT FLUSH IN WALL BETWEEN AND ABOVE PANELBOARDS. TORK #EW101-3/FLG. SEE DETAIL #8 SHEET E0.5.
17. TWO SWITCHES, a AND b. SWITCH 'a' CONTROLS OUTBOARD LAMPS, SWITCH 'b' CONTROLS INBOARD LAMP(S).
18. 4#12 TO CIRCUIT INDICATED THROUGH DIMMER CONTROL PANEL 'DCP', CONNECT TO DIMMER NOTED.
19. 1 POLE 20AMP CONTACTOR WITH 277V COIL IN NEMA 1 BOX. MOUNTED ADJACENT TO FAN.
20. [redacted]
21. 6 #10 - 1"C.

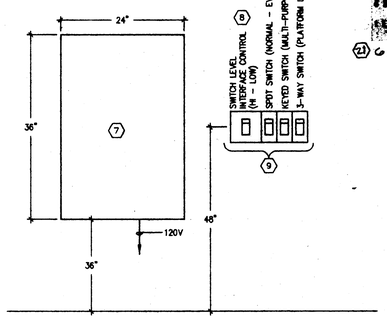

2 CONTROL ELEVATION

NOT TO SCALE

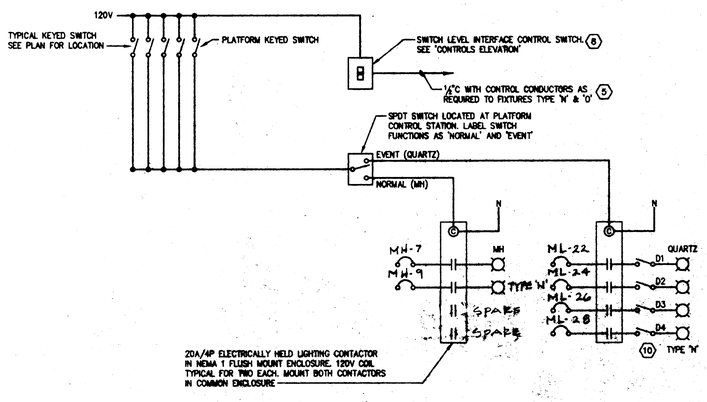

3 GYMNASIUM LIGHTING CONTROL SCHEMATIC

NOT TO SCALE

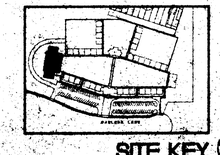

SITE KEY

NOT TO SCALE

HKA
Harlan Kruisemark - Architect
4415 Cowell Road, Suite 230
Concord, CA 94521
Tel: 925.681.1905
Fax: 925.681.1906

WHM INCORPORATED
Engineering Consultants
1605 School Street
Moraga, CA 94556
Tel (925)376-2902 • Fax (925)376-2908

Revisions | Date

HAWKINS SCHOOL

Darlene Lane
Tracy, CA 95376

Jefferson School District
7500 West Linne Road
Tracy, CA 95376

DSA FILE NO. 39-39
IDENTIFICATION STAMP
DIVISION OF THE STATE ARCHITECT
APPLIC -102225
AC
DATE AUG 2 8

Sheet Title:
ELECTRICAL BUILDING M:
MULTI-PURPOSE
LIGHTING PLAN

Printing Date / Purpose:
4/21/00 DSA REVIEW
8/18/00 DSA APPROVAL

Scale: 1/8" = 1'-0"
Project Number: 9903.00
Sheet Number:

E2.4A

FILE: 9910423-04A.dwg

COPYRIGHT © 2000 HARLAN KRUISEMARK - ARCHITECT (HKA) THESE DRAWINGS ARE PROPRIETARY DOCUMENTS OF HKA AND ARE NOT TO BE DISTRIBUTED, PUBLISHED OR REPRODUCED WITHOUT WRITTEN PERMISSION OF HKA.

4:10 pm 08/17/00
08/20/00 7:36:49 PM \\SERVER\CADD\1999\9910\9910E2-4A.DWG

SHEET NOTES

1. UP TO EXHAUST FAN CONTACTORS. SEE SHEET E2.4A.
2. GARBAGE DISPOSAL – 120V, 1ø, 1/2HP.
3. CASH REGISTER – 120V, 1ø.
4. UNIT RUNS CONTINUOUSLY. SEE MECHANICAL PLAN.
5. MOUNT TRANSFORMER 'W' ~~WITH BOTTOM OF UNIT 7'~~ ON FINISHED FLOOR
6. CONNECT TO HOOD SWITCH. MAX. 12" FROM EA. CORNER @ 3'-0" O.C., MIN. 2" FROM EDGE
7. PROVIDED FOR CONNECTION TO DOOR HEATER, DRAIN HEATER, HEATED AIR VENTS, EVAPORATOR COIL, AND LIGHTS IN UNITS.
8. SCORE BOARD N.I.C. AT +20'-0". PROVIDE 4" SQ. BOX WITH BLANK COVER PLATE.
9. LOCATION FOR 2"MT DATA STUB.
10. 3/4" MT FOR SCOREBOARD CONTROL.
11. PROVIDE 2"x4"x2 1/4" D OUTLET BOX COMPLETE WITH COVER PLATE FOR N.I.C. SCOREBOARD CONTROL, +12".
12. WATERPROOF GFI RECEPTACLE. SURFACE MOUNT TO SIDE OF MECHANICAL UNIT CLEAR OF REMOVABLE ACCESS PANELS.
13. MOUNT GROUP CONTROL BOXES AS FOLLOWS, BOX #1 TO CONTROL WEST CLERESTORY SHADES (A,B,C,D), BOX #2 TO CONTROL EAST CLERESTORY SHADES (E,F,G,H), BOX #3 AND #4 TO CONTROL WEST PERIMETER SHADES (J,K,L,M,N,O,P,Q) AND BOXES #5 AND #6 TO CONTROL EAST PERIMETER SHADES (R,S,T,U,V,W,X,Y).
14. TO GROUP CONTROL BOXES.
15. WINDOW SHADE LOW VOLTAGE CONTROL SWITCHES. MARK SWITCHES FOR SHADES CONTROL, PERIMETER WEST, AND PERIMETER EAST.
16. 1"MT STUBBED TO OFFICE M17 ADJACENT TO DATA SERVICE CONDUIT.
17. 3/4"MT TO SDTC.
18. 1PST 20AMP CONTACTOR WITH COIL VOLTAGE TO MATCH MECHANICAL CONTROL REQUIREMENT. FAN IS INTERLOCKED WITH AC-3.
19. ~~[illegible] VALVE CONNECTION FOR [illegible]~~
20. ~~[illegible] SURFACE MOUNTED [illegible] FACE OF STEP RISER.~~
21. ~~[illegible] CONTACTOR FOR [illegible]~~
22. ~~[illegible]~~
23. ~~[illegible] CONNECTION~~

EQUIPMENT SCHEDULE

NO.	QTY.	ITEM	ELECTRICAL CURRENT	ELECTRICAL AMP	NEMA	NOTES
1	1	COLD CABINET	120/60/1	7.2 A (6 1/3 HP)	5-15P	
2	1	HOT CABINET	208/60/1	17.3	L6-30	
3	1	FREEZER CABINET	120/60/1	4.0 A (1/5 HP)	5-15P	
4	1	CASHIER STAND	–	–		
5	1	WALK-IN FREEZER/COOLER	208-230/60/3	VARIOUS		
6	4	HEATED TRANSPORT CABINET	120/60/1	18		
7	1	MILK COOLER	120/60/1	6.3		
8	2	WALL SHELF	–	–		
9	3	DISPOSER	208/6/3	6.8A (1 1/2 HP)		
10	1	DISHWASHER	115/60/1	13.0 A (1 HP)		
11	1	DISH TABLE	–	–		
12	1	DISH TABLE	–	–		
13	1	DOUBLE CONVECTION OVEN	120/6/1	6.0 A (1/3 HP)		
14	1	WORK TABLE	–	–		
15	1	SINK	–	–		
16	1	BAKER'S TABLE	–	–		
17	1	PREP TABLE/SINK	–	–		
18	1	MIXER	208/60/3	5		
19	1	REACH-IN REFRIG/FREEZER	115/60/1	10.7		
20	1	ICE MAKER	115/60/1	12.3		
21	1	ICE BIN	–	–		
22	1	FILTER	–	–		
23	1	RANGE	–	–		
24	1	EXHAUST HOOD	120/60/1	– 1/7 HP		ROOF,NOTE 3
25	1	STEAM KETTLE	120/60/1	10		
26	1	MICROWAVE	120/60/1		5-20P	1700W
27	5	SHELVING 86"H	–	–		
28	2	DUNNAGE RACKS 56"H	–	–		
29	1	COMBI OVEN/STEAMER	208/60/3	94		
30	1	FILTER	–	–		
31		ANTI-FATIGUE MATE	–	–		
32	1	AIR CURTAIN	120/60/1	5.1		NOTE 1
33	3	TABLE SHELF	–	–		
34	1	WORK TABLE	–	–		
35	12	SHELVING 86"H	–	–		
36	2	S/S SHELVING 86"H	–	–		

NOTES:
1. SEE POWER PLAN THIS SHEET FOR ELECTRICAL REQUIREMENTS
2. SEE PANEL SCHEDULE 'MH' FOR ELECTRICAL LOAD. VERIFY LOAD AND VOLTAGE.
3. PROVIDE CONNECTION TO HOOD SWITCH.

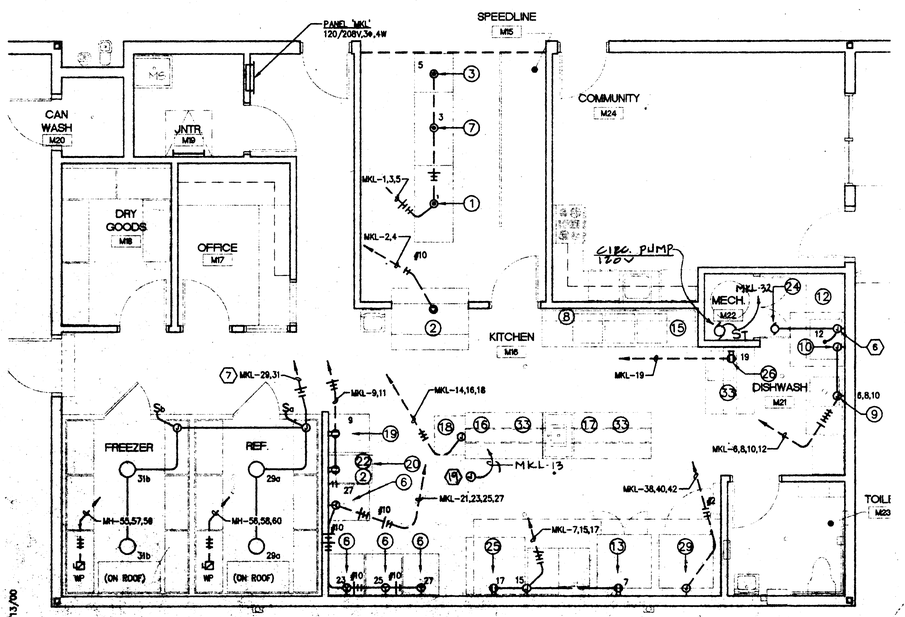

1 ELECTRICAL ENLARGED KITCHEN EQUIPMENT PLAN

SCALE: 1/8" = 1'-0"

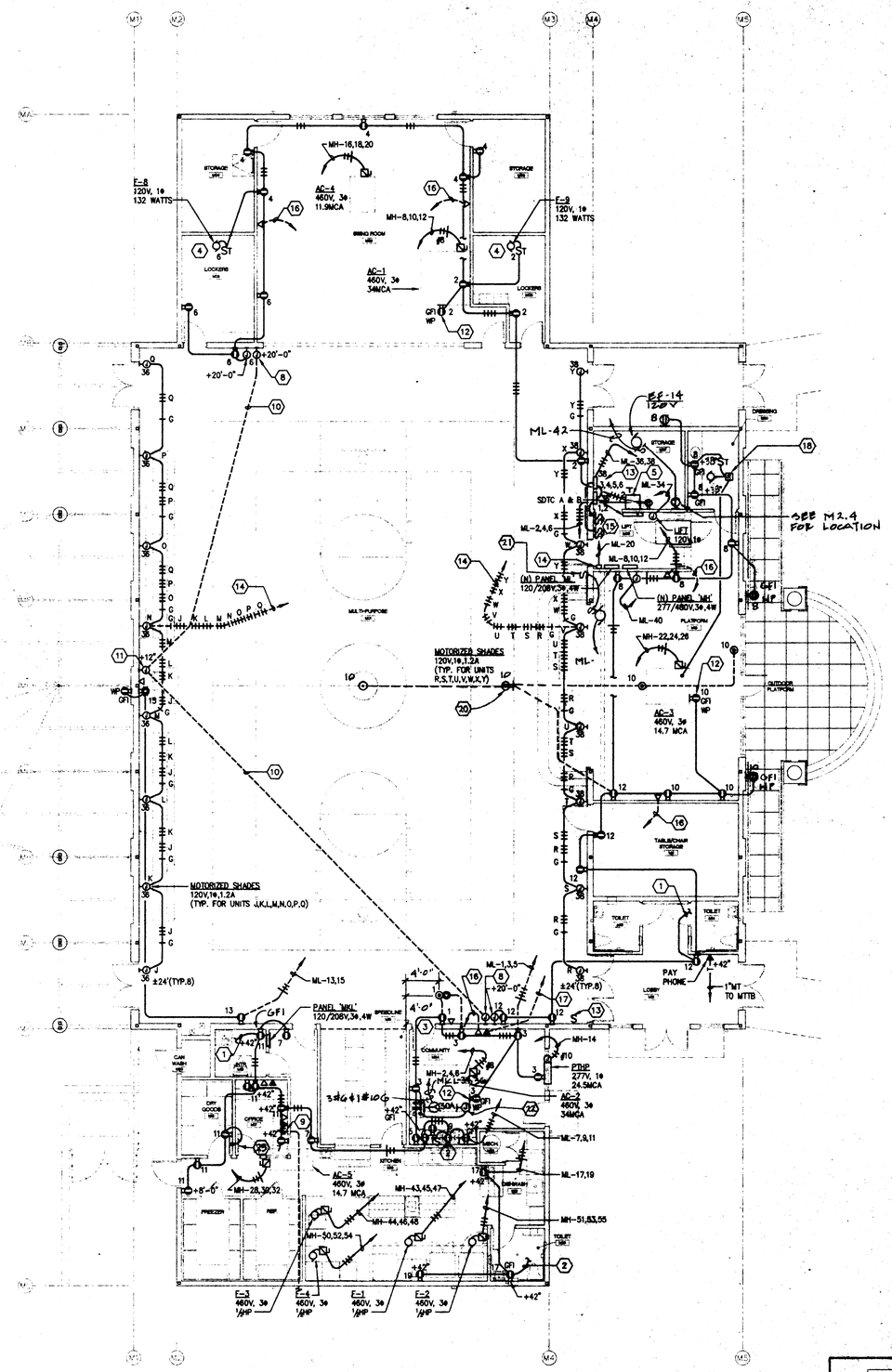

2 ELECTRICAL BLDG 'M': MULTI-PURPOSE POWER PLAN

SCALE: 1/8" = 1'-0"

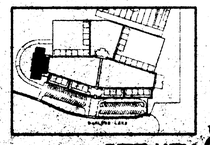

SITE KEY

HKA
Harlan Kyusemark - Architect
4415 Cowell Road, Suite 230
Concord, CA 94521
Tel: 925.681.1905
Fax: 925.681.1906

WHM INCORPORATED
Engineering Consultants
1605 School Street
Moraga, CA 94556
Tel (925)376-2902 • Fax (925)376-[illegible]

Revisions

HAWKINS SCHOOL
Darlene Lane
Tracy, CA 95376

Jefferson School District
7500 West Linne Road
Tracy, CA 95376

IDENTIFICATION STAMP, DIVISION OF THE STATE ARCHITECT
APPL#2 -102225
DATE AUG 2 4 2000

Sheet Title:
ELECTRICAL BUILDING 'M': MULTI-PURPOSE POWER PLAN

Printing Date / Purpose:
4/21/00 DSA REVIEW
8/18/00 DSA APPROVAL

Scale: 1/8" = 1'-0"
Project Number: 9903.00
Sheet Number:

E2.4B

COPYRIGHT © 2000 HARLAN KYUSEMARK - ARCHITECT (HKA) THESE DRAWINGS AND SPECIFICATIONS DOCUMENTS ARE AND ARE NOT TO BE REPRODUCED, PUBLISHED OR USED IN WHOLE OR IN PART WITHOUT THE WRITTEN PERMISSION OF HKA.

08/18/00 8:03:24 PM \\SERVER\CAD\1999\9903\E2-4B.DWG

04/13/00

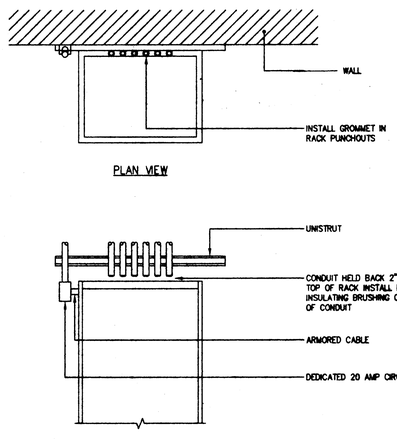

2 EQUIPMENT RACK-CONDUIT DETAIL

NOT TO SCALE

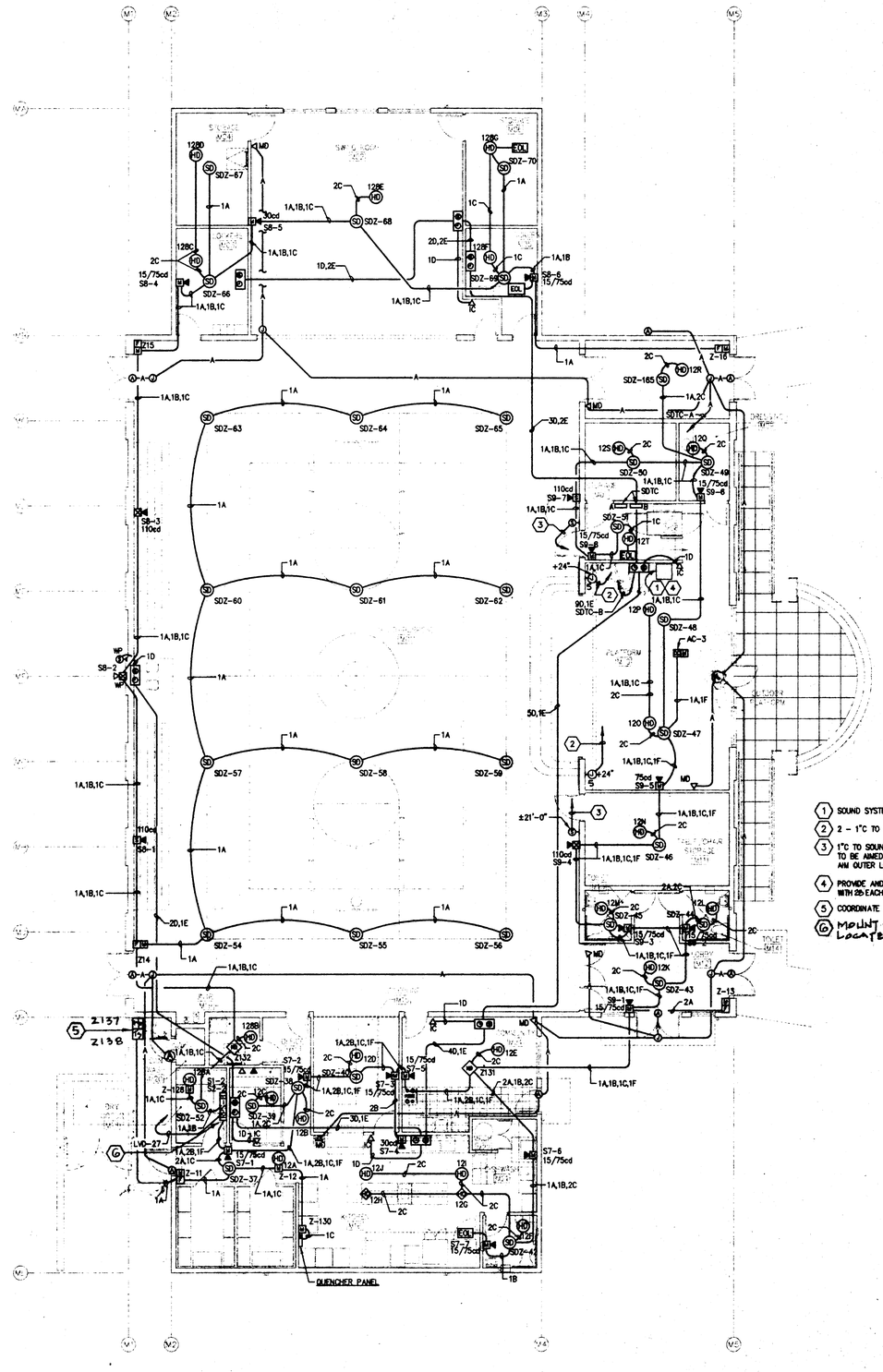

1 ELECTRICAL BLDG 'M': MULTI-PURPOSE SIGNAL PLAN

SCALE: 1/8" = 1'-0"

SHEET NOTES

1. SOUND SYSTEM RACK AND EQUIPMENT, SEE DETAIL THIS SHEET FOR REQUIREMENT.
2. 2 - 1"C TO SOUND SYSTEM RACK.
3. 1"C TO SOUND SYSTEM RACK FROM SPEAKERS, PEAVEY # DTH 4215. SPEAKER ARRAY IS TO BE AIMED 15° DOWNWARD. AIM INSIDE SPEAKER 50° TOWARD CENTERLINE OF STAGE. AIM OUTER LOUD SPEAKER 5° AWAY FROM CENTERLINE OF STAGE.
4. PROVIDE AND INSTALL AN ASSISTIVE LISTENING SYSTEM, SOUND MATE ST 200 COMPLETE WITH 2B EACH SR-50 RECEIVERS, 2B EACH SEB-1 EARBUDS AND 14 EACH BC-100 CHARGERS.
5. COORDINATE EXACT LOCATION WITH MECHANICAL CONTRACTOR.
6. MOUNT BOTTOM OF RPS CABINET @ 7'-6" A.F.F. LOCATED ABOVE DESK

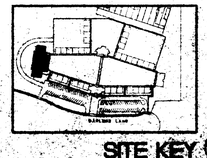

SITE KEY

HKA
Harlan Kruesmark - Architect
4415 Cowell Road, Suite 230
Concord, CA 94521
Tel: 925.681.1905
Fax: 925.681.1906

WHM INCORPORATED
Engineering Consultants
1605 School Street
Moraga, CA 94556
Tel (925)376-2902 • Fax (925)376-2904
99104

Revisions	Date

HAWKINS SCHOOL

Darlene Lane
Tracy, CA 95376

Jefferson School District
7500 West Linne Road
Tracy, CA 95376

DSA FILE NO. 38-38
IDENTIFICATION STAMP
DIVISION OF THE STATE ARCHITECT
APPL02 -102225
AC FILE SB
DATE AUG 2 4 2000

Sheet Title:
ELECTRICAL BUILDING M:
MULTI-PURPOSE
FIREALARM, AND
SIGNAL PLAN

Printing Date / Purpose:
4/21/00 DSA REVIEW
8/18/00 DSA APPROVAL

Scale: 1/8" = 1'-0"
Project Number: 9903.00
Sheet Number:

E2.4C

COPYRIGHT © 2000 HARLAN KRUESMARK - ARCHITECT (HKA) THESE DRAWINGS ARE PROPRIETARY DOCUMENTS OF HKA AND ARE NOT TO BE REPRODUCED, PUBLISHED OR DISTRIBUTED WITHOUT WRITTEN PERMISSION OF HKA.

5:08 pm 08/18/00
08/20/00 8:10:10 PM \\SERVER\CAD\1999\99104\99104E2-4C.DWG

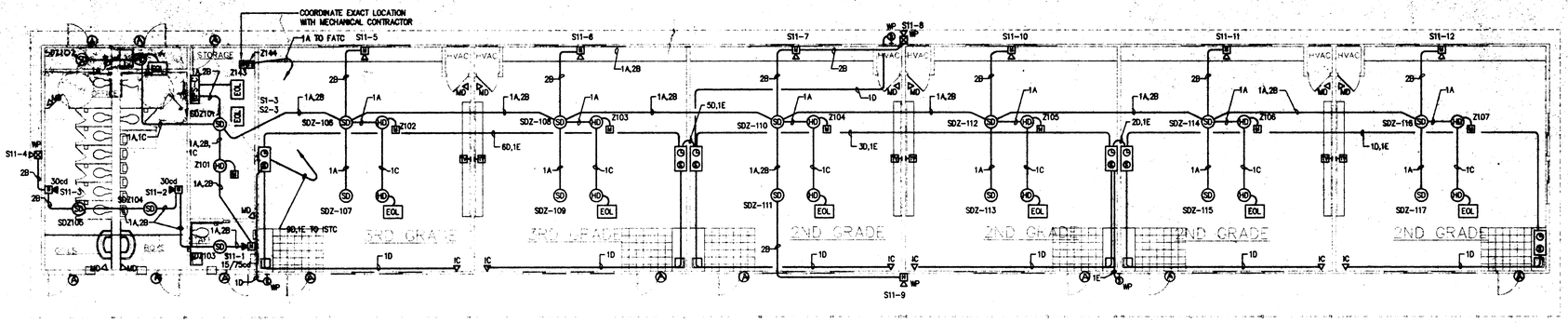

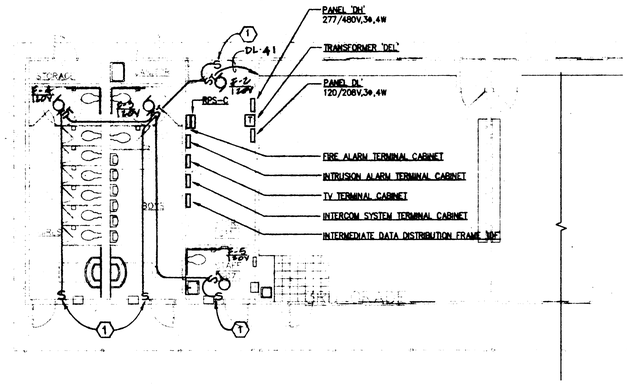

3 ELECTRICAL BLDG D: 2ND GRADE/ TOILET SIGNAL PLAN

SCALE: 1/8" = 1'-0"

4 ELECTRICAL BLDG D: EQUIPMENT PLAN

SCALE: 1/8" = 1'-0"

SHEET NOTES

1. SWITCH FURNISED BY MECHANICAL, INSTALLED AND CONNECTED BY ELECTRICAL. SEE SHEET MO.2.

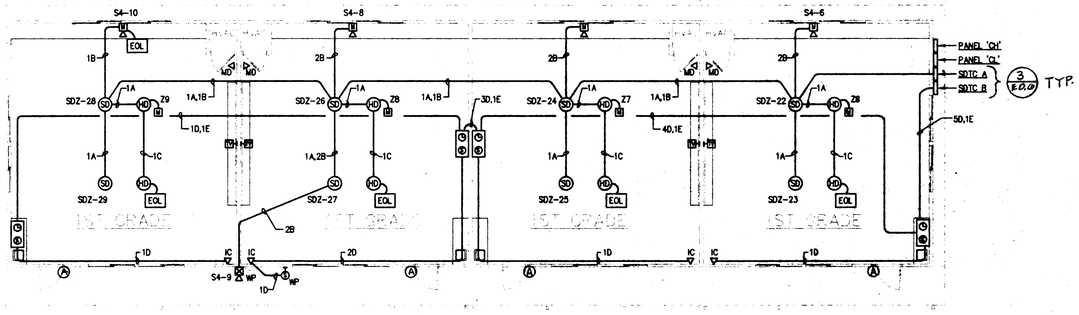

2 ELECTRICAL BLDG C: 1ST GRADE SIGNAL PLAN

SCALE: 1/8" = 1'-0"

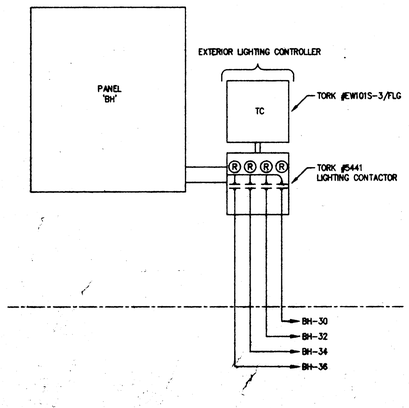

6 SITE LIGHTING CONTROLS DIAGRAM

NOT TO SCALE

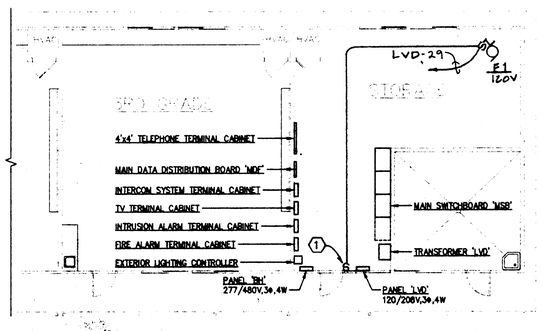

5 ELECTRICAL BLDG B: EQUIPMENT PLAN

SCALE: 1/8" = 1'-0"

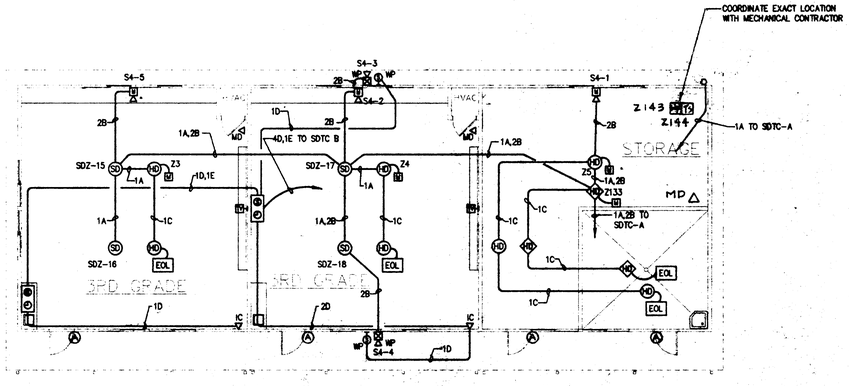

1 ELECTRICAL BLDG B: 3RD GRADE SIGNAL PLAN

SCALE: 1/8" = 1'-0"

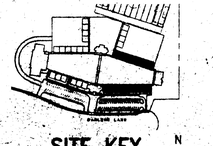

SITE KEY

HKA
Harlan Kruesmark - Architect
4415 Cowell Road, Suite 230
Concord, CA 94521
Tel: 925.681.1905
Fax: 925.681.1906

WHM INCORPORATED
Engineering Consultants
1605 School Street
Moraga, CA 94556
Tel (925)376-2902 • Fax (925)376-2904
99104

Revisions | Date

HAWKINS SCHOOL

Darlene Lane
Tracy, CA 95376

Jefferson School District
7500 West Linne Road
Tracy, CA 95376

DSA FILE NO. 38-39
IDENTIFICATION STAMP
DIVISION OF THE STATE ARCHITECT
APPL02 -102225
AC
DATE AUG 2 3 2000

Sheet Title:
ELECTRICAL BUILDINGS B,C,&D: FIREALARM, AND SIGNAL PLAN

Printing Date / Purpose:
4/21/00 DSA REVIEW
8/18/00 DSA APPROVAL

Scale: 1/8" = 1'-0"
Project Number: 9903.00
Sheet Number:

E2.6C

COPYRIGHT © 2000 HARLAN KRUESMARK - ARCHITECT (HKA). THESE DRAWINGS ARE PROPRIETARY DOCUMENTS OF HKA AND ARE NOT TO BE DISTRIBUTED, PUBLISHED OR REPRODUCED WITHOUT WRITTEN PERMISSION OF HKA.

08/21/00 11:15:21 AM \\SERVER\CAD\1999\99104\99104E2-SC.DWG

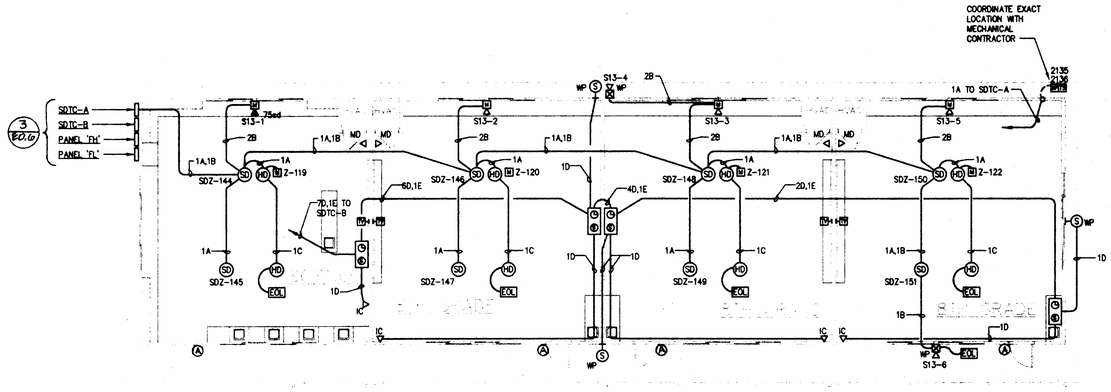

② ELECTRICAL BLDG F: 8TH GRADE/ SCIENCE SIGNAL PLAN

SCALE: 1/8" = 1'-0"

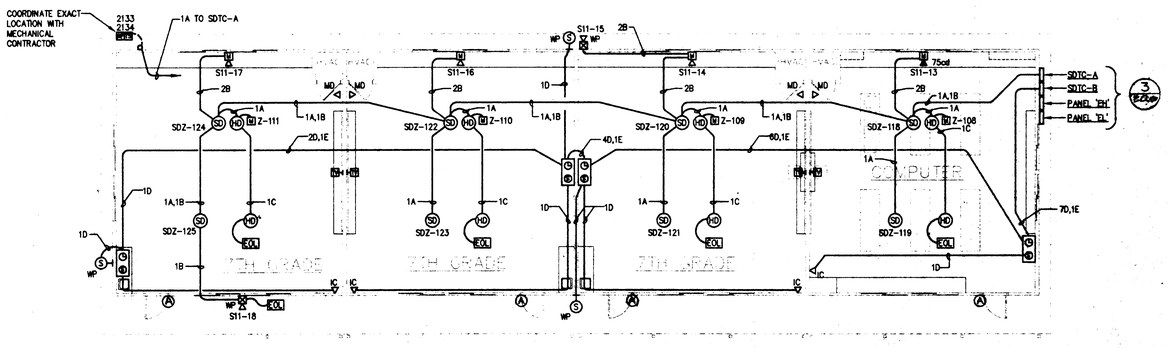

① ELECTRICAL BLDG E: 7TH GRADE/ COMPUTER SIGNAL PLAN

SCALE: 1/8" = 1'-0"

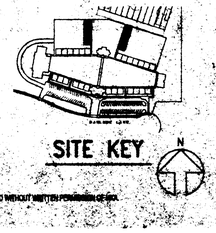

SITE KEY

HKA
Harlan Kruesmark - Architect
4415 Cowell Road, Suite 230
Concord, CA 94521
Tel: 925.681.1905
Fax: 925.681.1906

WHM INCORPORATED
Engineering Consultants
1605 School Street
Moraga, CA 94556
Tel (925)376-2902 • Fax (925)376-2904
99104

Revisions | Date

HAWKINS SCHOOL

Darlene Lane
Tracy, CA 95376

Jefferson School District
7500 West Linne Road
Tracy, CA 95376

DSA FILE NO. 99-39
IDENTIFICATION STAMP
DIVISION OF THE STATE ARCHITECT
APPL02 - 102225
AC FLS
DATE AUG 2 4 2000

Sheet Title:
ELECTRICAL BUILDINGS
E,&F
FIREALARM, AND
SIGNAL PLAN

Printing Date / Purpose:
4/21/00 DSA REVIEW
8/18/00 DSA APPROVAL

Scale: 1/8" = 1'-0"
Project Number: 9903.00
Sheet Number:

E2.7C

COPYRIGHT © 2000 HARLAN KRUESMARK - ARCHITECT (HKA) THESE DRAWINGS ARE PROPRIETARY DOCUMENTS OF HKA AND ARE NOT TO BE DISTRIBUTED, PUBLISHED OR REPRODUCED WITHOUT WRITTEN PERMISSION OF HKA.

08/20/00 8:04:32 PM \\SERVER\CAD\1999\99104\99104E2-6C.DWG

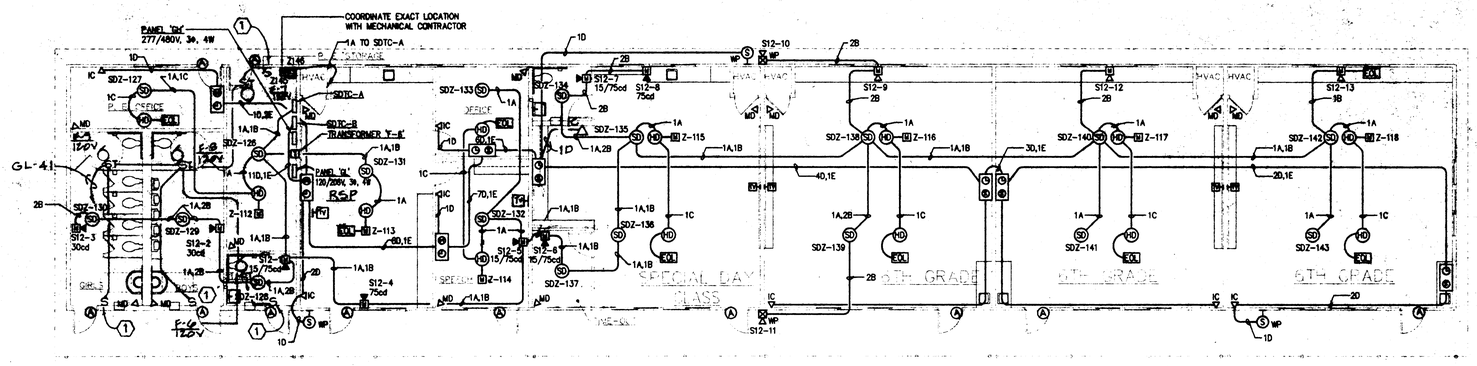

SHEET NOTES

(1) SWITCH FURNISHED BY MECHANICAL, INSTALLED AND CONNECTED BY ELECTRICAL. SEE SHEET MO.2.

(3) BLDG. G: 6TH GRADE/SDC/ RSP/TOILET SIGNAL PLAN

SCALE: 1/8" = 1'-0"

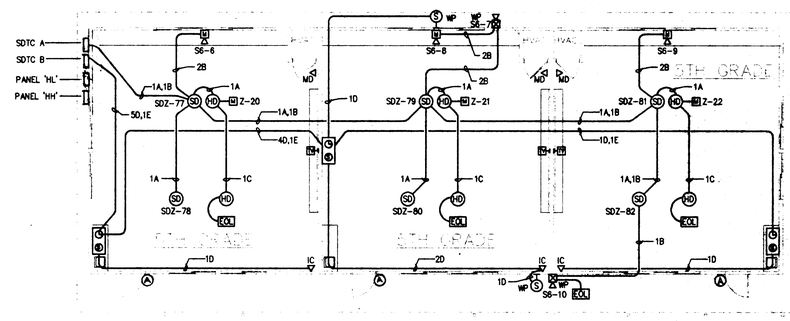

(2) BLDG. H: 5TH GRADE SIGNAL PLAN

SCALE: 1/8" = 1'-0"

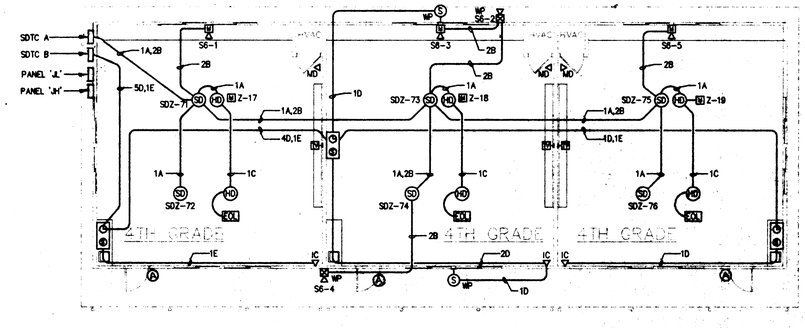

(1) BLDG. J: 4TH GRADE SIGNAL PLAN

SCALE: 1/8" = 1'-0"

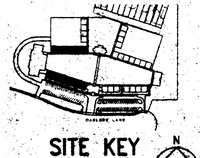

SITE KEY

HKA
Harlan Krusemark - Architect
4415 Cowell Road, Suite 230
Concord, CA 94521
Tel: 925.681.1905
Fax: 925.681.1906

WHM INCORPORATED
Engineering Consultants
1605 School Street
Moraga, CA 94556
Tel (925)376-2902 • Fax (925)376-2904
99104

Revisions

HAWKINS SCHOOL

Darlene Lane
Tracy, CA 95376

Jefferson School District
7500 West Linne Road
Tracy, CA 95376

DSA FILE NO. 39-39
IDENTIFICATION STAMP
DIVISION OF THE STATE ARCHITECT
APPL02 -102225
AC ___ R.B. ___ SS ___
DATE AUG 2 4 2000

Sheet Title:
ELECTRICAL BUILDINGS
G,H,&J:
FIREALARM, AND
SIGNAL PLAN

Printing Date / Purpose:
4/21/00 DSA REVIEW
8/18/00 DSA APPROVAL

Scale: 1/8" = 1'-0"
Project Number: 9903.00
Sheet Number:

E28C

COPYRIGHT © 2000 HARLAN KRUSEMARK - ARCHITECT (HKA) THESE DRAWINGS ARE PROPRIETARY DOCUMENTS OF HKA AND ARE NOT TO BE DISTRIBUTED, PUBLISHED OR REPRODUCED WITHOUT WRITTEN PERMISSION OF HKA.

08/20/00 8:05:50 PM \\SERVER\CAD\1999\99104\99104E2-7C.DWG

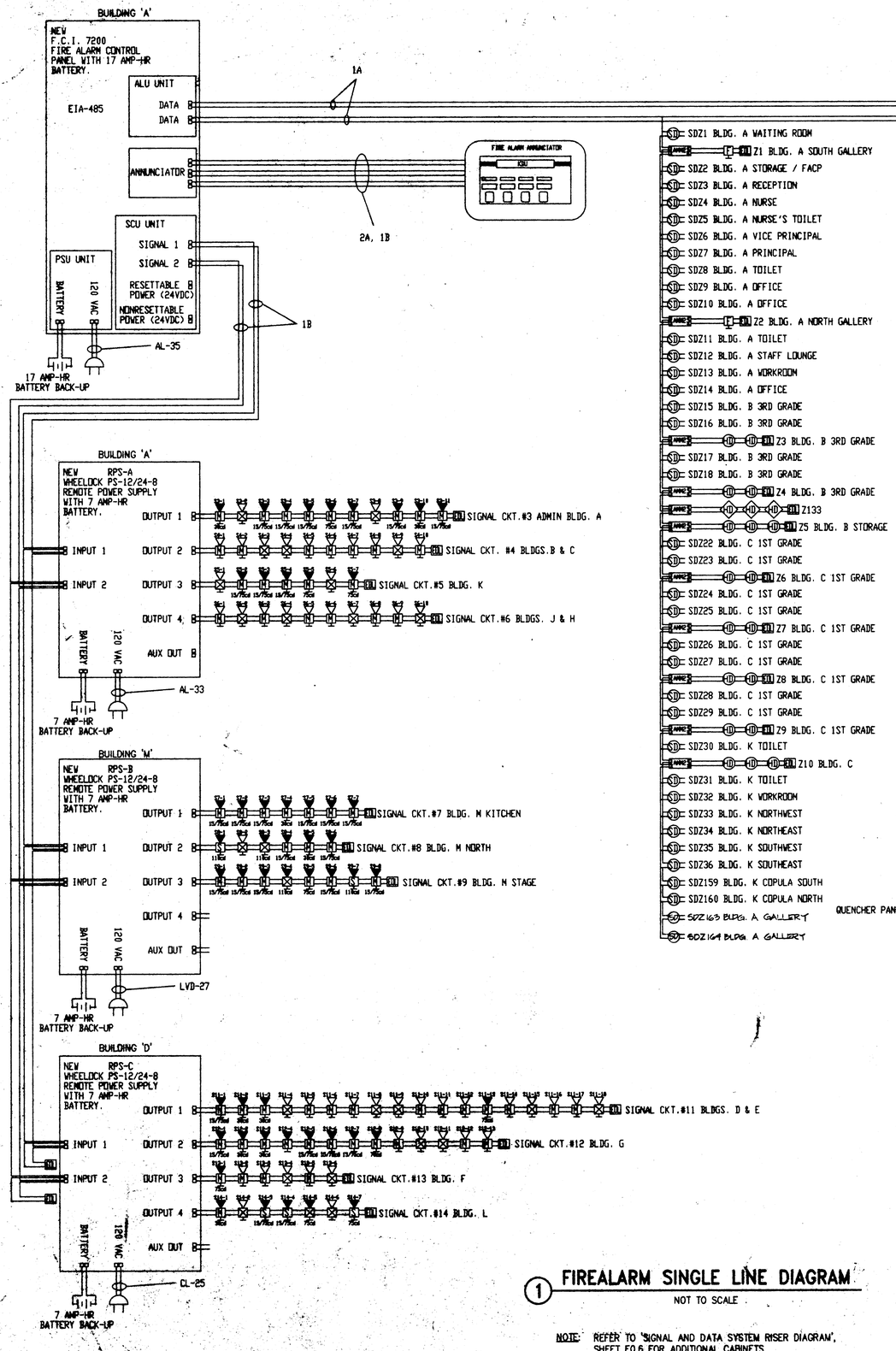

SDZ1 BLDG. A WAITING ROOM
Z1 BLDG. A SOUTH GALLERY
SDZ2 BLDG. A STORAGE / FACP
SDZ3 BLDG. A RECEPTION
SDZ4 BLDG. A NURSE
SDZ5 BLDG. A NURSE'S TOILET
SDZ6 BLDG. A VICE PRINCIPAL
SDZ7 BLDG. A PRINCIPAL
SDZ8 BLDG. A TOILET
SDZ9 BLDG. A OFFICE
SDZ10 BLDG. A OFFICE
Z2 BLDG. A NORTH GALLERY
SDZ11 BLDG. A TOILET
SDZ12 BLDG. A STAFF LOUNGE
SDZ13 BLDG. A WORKROOM
SDZ14 BLDG. A OFFICE
SDZ15 BLDG. B 3RD GRADE
SDZ16 BLDG. B 3RD GRADE
Z3 BLDG. B 3RD GRADE
SDZ17 BLDG. B 3RD GRADE
SDZ18 BLDG. B 3RD GRADE
Z4 BLDG. B 3RD GRADE
Z133
Z5 BLDG. B STORAGE
SDZ22 BLDG. C 1ST GRADE
SDZ23 BLDG. C 1ST GRADE
Z6 BLDG. C 1ST GRADE
SDZ24 BLDG. C 1ST GRADE
SDZ25 BLDG. C 1ST GRADE
Z7 BLDG. C 1ST GRADE
SDZ26 BLDG. C 1ST GRADE
SDZ27 BLDG. C 1ST GRADE
Z8 BLDG. C 1ST GRADE
SDZ28 BLDG. C 1ST GRADE
SDZ29 BLDG. C 1ST GRADE
Z9 BLDG. C 1ST GRADE
SDZ30 BLDG. K TOILET
Z10 BLDG. C
SDZ31 BLDG. K TOILET
SDZ32 BLDG. K WORKROOM
SDZ33 BLDG. K NORTHWEST
SDZ34 BLDG. K NORTHEAST
SDZ35 BLDG. K SOUTHWEST
SDZ36 BLDG. K SOUTHEAST
SDZ159 BLDG. K COPULA SOUTH
SDZ160 BLDG. K COPULA NORTH
SDZ163 BLDG. A GALLERY
SDZ164 BLDG. A GALLERY

1A TYPICAL
1C TYPICAL
Z11 BLDG. M KITCHEN HALLWAY
SDZ37 BLDG. M KITCHEN HALLWAY
SDZ38 BLDG. M KITCHEN HALLWAY
SDZ39 BLDG. M OFFICE M17
SDZ40 BLDG. M SPEEDLINE
Z131 BLDG. M COMMUNITY M24
SDZ42 BLDG. M KITCHEN TOILET
Z12 BLDG. M KITCHEN WEST
Z13 BLDG. M LOBBY DOOR
SDZ43 BLDG. M LOBBY
SDZ44 BLDG. M TOILET M14
SDZ45 BLDG. M TOILET M15
SDZ46 BLDG. M STORAGE M11
SDZ47 BLDG. M SOUTH STAGE
SDZ48 BLDG. M NORTH STAGE
SDZ49 BLDG. M DRESSING ROOM
SDZ50 BLDG. M STRORAGE M07
SDZ51 BLDG. M LIFT M08
SDZ52 BLDG. M DRY GOODS M18
Z132 BLDG. M JANITOR M19
Z14 SOUTHWEST DOOR BLDG. M
SDZ54 BLDG. M MULTI-USE ROOM
SDZ55 BLDG. M MULTI-USE ROOM
SDZ56 BLDG. M MULTI-USE ROOM
SDZ57 BLDG. M MULTI-USE ROOM
SDZ58 BLDG. M MULTI-USE ROOM
SDZ59 BLDG. M MULTI-USE ROOM
SDZ60 BLDG. M MULTI-USE ROOM
SDZ61 BLDG. M MULTI-USE ROOM
SDZ62 BLDG. M MULTI-USE ROOM
SDZ63 BLDG. M MULTI-USE ROOM
SDZ64 BLDG. M MULTI-USE ROOM
SDZ65 BLDG. M MULTI-USE ROOM
Z15 NORTHWEST DOOR BLDG. M
SDZ66 BLDG. M LOCKERS M03
SDZ67 BLDG. M STORAGE M04
SDZ68 BLDG. M SWING ROOM M02
SDZ69 BLDG. M LOCKERS M05
SDZ70 BLDG. M STORAGE M06
Z128 BLDG M KITCHEN & NORTH
SDZ163 BLDG. M NORTH VESTIBULE
QUENCHER PANEL
Z129 BLDG M STAGE (AC-3)
Z130 BLDG M KITCHEN
Z16 BLDG. M NORTH VESTIBULE
SDZ71 BLDG. J 4TH GRADE
SDZ72 BLDG. J 4TH GRADE
Z17 BLDG. J 4TH GRADE
SDZ73 BLDG. J 4TH GRADE
SDZ74 BLDG. J 4TH GRADE
Z18 BLDG. J 4TH GRADE
SDZ75 BLDG. J 4TH GRADE
SDZ76 BLDG. J 4TH GRADE
Z19 BLDG. J 4TH GRADE
SDZ77 BLDG. H 5TH GRADE
SDZ78 BLDG. H 5TH GRADE
Z20 BLDG. H 5TH GRADE
SDZ79 BLDG. H 5TH GRADE
SDZ80 BLDG. H 5TH GRADE
Z21 BLDG. H 5TH GRADE
SDZ81 BLDG. H 5TH GRADE
SDZ82 BLDG. H 5TH GRADE
Z22 BLDG. H 5TH GRADE
Z137 BLDG. M RISER
Z138 BLDG. M RISER
Z141 BLDG. B RISER
Z142 BLDG. B RISER
Z147 BLDG. SOUTH PIV
Z148 BLDG. SOUTH PIV

SDZ101 BLDG. D STORAGE
Z101 BLDG. D WEST
SDZ102 BLDG. D OFFICE
SDZ103 BLDG. D STAFF TOILET
SDZ104 BLDG. D BOYS TOILET
SDZ105 BLDG. D GIRLS TOILET
SDZ106 BLDG. D 3RD GRADE
SDZ107 BLDG. D 3RD GRADE
Z102 BLDG. D 3RD GRADE
SDZ108 BLDG. D 3RD GRADE
SDZ109 BLDG. D 3RD GRADE
Z103 BLDG. D 3RD GRADE
SDZ110 BLDG. D 2ND GRADE
SDZ111 BLDG. D 2ND GRADE
Z104 BLDG. D 2ND GRADE
SDZ112 BLDG. D 2ND GRADE
SDZ113 BLDG. D 2ND GRADE
Z105 BLDG. D 2ND GRADE
SDZ114 BLDG. D 2ND GRADE
SDZ115 BLDG. D 2ND GRADE
Z106 BLDG. D 2ND GRADE
SDZ116 BLDG. D 2ND GRADE
SDZ117 BLDG. D 2ND GRADE
Z107 BLDG. D 2ND GRADE
SDZ118 BLDG. E COMPUTER LAB
SDZ119 BLDG. E COMPUTER LAB
Z108 BLDG. E COMPUTER LAB
SDZ120 BLDG. E 7TH GRADE
SDZ121 BLDG. E 7TH GRADE
Z109 BLDG. E 7TH GRADE
SDZ122 BLDG. E 7TH GRADE
SDZ123 BLDG. E 7TH GRADE
Z110 BLDG. E 7TH GRADE
SDZ124 BLDG. E 7TH GRADE
SBZ125 BLDG. E 7TH GRADE
Z111 BLDG. E 7TH GRADE
SDZ126 BLDG. G P.E. STORAGE
Z112 BLDG. G OFFICE
SDZ127 BLDG. G P.E. OFFICE
SDZ128 BLDG. G STAFF TOILET
SDZ129 BLDG. G BOYS TOILET
SDZ130 BLDG. G GIRLS TOILET
SDZ131 BLDG. G RSP
Z113 BLDG. G RSP
SDZ132 BLDG. G SPEECH
Z114 BLDG. G SPEECH
SDZ133 BLDG. G OFFICE
SDZ134 BLDG. G SPECIAL DAY CLASS TOILET
SDZ135 BLDG. G SPECIAL DAY CLASS
SDZ136 BLDG. G SPECIAL DAY CLASS
SDZ137 BLDG. G SPECIAL DAY CLASS TIME OUT
Z115 BLDG. G SPECIAL DAY CLASS
SDZ138 BLDG. G 6TH GRADE
SDZ139 BLDG. G 6TH GRADE
Z116 BLDG. G 6TH GRADE
SDZ140 BLDG. G 6TH GRADE
SDZ141 BLDG. G 6TH GRADE
Z117 BLDG. G 6TH GRADE
SDZ142 BLDG. G 6TH GRADE
SDZ143 BLDG. G 6TH GRADE
Z118 BLDG. G 6TH GRADE

SDZ144 BLDG. F SCIENCE
SDZ145 BLDG. F SCIENCE
Z119 BLDG. F SCIENCE
SDZ146 BLDG. F 8TH GRADE
SDZ147 BLDG. F 8TH GRADE
Z120 BLDG. F 8TH GRADE
SDZ148 BLDG. F 8TH GRADE
SDZ149 BLDG. F 8TH GRADE
Z121 BLDG. F 8TH GRADE
SDZ150 BLDG. F 8TH GRADE
SDZ151 BLDG. F 8TH GRADE
Z122 BLDG. F 8TH GRADE
SDZ152 BLDG. L WORKROOM
Z123 BLDG. L NORTHEAST DOOR
SDZ153 BLDG. L LIBRARY
SDZ154 BLDG. L LIBRARY
SDZ155 BLDG. L LIBRARY
SDZ156 BLDG. L LIBRARY
SDZ157 BLDG. L LIBRARY
SDZ158 BLDG. L LIBRARY
Z124 BLDG. L SOUTH DOOR
Z126 ADMIN WEST
Z125 ADMIN EAST
Z127 LIBRARY
SDZ161 BLDG. L LIBRARY
SDZ162 BLDG. L LIBRARY
2133 BLDG. E RISER
2134 BLDG. E RISER
2135 BLDG. F RISER
2136 BLDG. F RISER
2139 BLDG. L RISER
2140 BLDG. L RISER
2143 BLDG. D RISER
2144 BLDG. D RISER
2145 BLDG. G RISER
2146 BLDG. G RISER
2149 BLDG. E NORTH PIV
2150 BLDG. E NORTH PIV

1 FIREALARM SINGLE LINE DIAGRAM

NOT TO SCALE

NOTE: REFER TO 'SIGNAL AND DATA SYSTEM RISER DIAGRAM', SHEET E0.6 FOR ADDITIONAL CABINETS.

HKA
Harlan Kruisenmark - Architect
4419 Cowell Road, Suite 230
Concord, CA 94521
Tel: 925.681.1905
Fax: 925.681.1905

WHM INCORPORATED
Engineering Consultants
1605 School Street
Moraga, CA 94556
Tel (925)376-2902 • Fax (925)376-2904

Revisions | Date

HAWKINS SCHOOL
Darlene Lane
Tracy, CA 95376

Jefferson School District
7500 West Linne Road
Tracy, CA 95376

DSA FILE NO. 39-30
IDENTIFICATION STAMP
DIVISION OF THE STATE ARCHITECT
APPLIC -102225
AC FLA
DATE AUG 2 4 2000

Sheet Title:
ELECTRICAL
FIREALARM DIAGRAM

Printing Date / Purpose:
4/21/00 DSA REVIEW
8/18/00 DSA APPROVAL

Scale: AS NOTED
Project Number: 9903.00
Sheet Number:

E3.1

COPYRIGHT © HARLAN KRUISENMARK - ARCHITECT (HKA) THESE DRAWINGS ARE PROPRIETARY DOCUMENTS OF HKA AND ARE NOT TO BE REPRODUCED, CHANGED OR COPIED IN ANY FORM OR MANNER WITHOUT WRITTEN PERMISSION OF HKA.

8/21/00 1:35:53 AM \\SERVER\CADD\1999\9910\9910E31.DWG 5:01 pm 08/18/00